City of Concord
Technical Standards Manual

City of Concord
Technical Standards Manual

Article I
Stormwater

SECTION 1
POLICIES AND REQUIREMENTS

Page

Page

LIST OF TABLES

This Page Intentionally Left Blank

1.1 INTRODUCTION

1.1.1 Purpose

The intent of the Stormwater Technical Standards is to guide the planning, design, construction, operation, and maintenance of stormwater management facilities within the City of Concord (City) and all areas subject to its extraterritorial jurisdiction. Definitions, formulas, criteria, procedures, and data presented herein have been developed to support these policies. If a conflict arises between the technical data and these policies, the policies shall govern.

1.1.2 Contents

This Technical Standards addresses the following:

SECTION 1	POLICIES AND REQUIREMENTS
SECTION 2	STORMWATER RUNOFF
SECTION 3	STREET DRAINAGE
SECTION 4	STORM INLETS
SECTION 5	STORM SEWERS
SECTION 6	OPEN CHANNELS
SECTION 7	CULVERTS AND BRIDGES
SECTION 8	HYDRAULICS OF DETENTION
SECTION 9	SEDIMENT AND EROSION CONTROL
SECTION 10	WATER QUALITY
SECTION 11	REFERENCES

1.1.3 Limitations

This Article is intended to establish appropriate design procedures. It is not to replace sound engineering practices nor preclude the use of procedures or information not presented herein. Information has been gathered from numerous sources and has not been presented in its entirety. It is recommended that the user obtain the original or additional reference material as appropriate. A bibliography is provided in Section 11.

1.2 ADMINISTRATIVE POLICY

These policies shall govern the planning, design, construction, operation, and maintenance of all stormwater related facilities within the City and all areas subject to its extra-territorial jurisdiction.

1.2.1 Goals and Objectives

The goals and objectives of the City of Concord Stormwater Management Program are as follows:

1. Protect human life and health.
2. Provide for the City's compliance with the Federal Clean Water Act (33 USC s1251 et seq.) and other regulations and permits conditions.
3. Improve the quality of stormwater runoff discharge to surface and groundwater.
4. Minimize private and public property damage resulting from erosion, sedimentation, and flooding.
5. Prevent new development from creating a demand for public investment in flood-control and water quality improvement works.
6. Provide an effective stormwater management system that will not result in excessive public or private monies being used for maintenance and replacement of portions of the system.
7. Facilitate the design of stormwater management systems that are consistent with good engineering practice and design and in accordance with the City's overall planning efforts and its watershed master plans.
8. Provide a mechanism that allows development of areas with minimum adverse effects to the natural environment.
9. Utilize appropriate public open space for both open space uses (parks, recreational uses, etc.) and the temporary storage and treatment of excess stormwater.
10. Encourage preservation of the drainage system in a natural and aesthetically pleasing condition as possible.
11. Encourage sustainable development.

1.2.2 Approvals

All stormwater management related plans must have written approval from the City in the form of a Stormwater Management Permit prior to bidding or beginning construction, except where specifically exempted by the City's Stormwater Quality Management and Discharge Control Ordinance (Ordinance).

1.2.3 Stormwater Management Permits

When required, permit application procedures shall be in accordance with the procedures outlined in this Article.

1.2.4 Article Revisions

Revisions to this Article will be issued in writing and can only be made by the City. Minor changes or modifications will be summarized in errata sheets and will be made available as necessary. The City reserves the right to make major changes affecting policy, criteria, methodologies, or engineering data. It shall be the responsibility of the design professional to obtain all updates. Any changes requested by users shall be accompanied by detailed comparative engineering data supporting the reasons and justification for the changes. Any changes so proposed must be in the best interest of the City.

1.2.5 Stormwater Management Permit Requirements

Stormwater management is a part of the total urban environmental system. As a requirement of the City's Stormwater National Pollutant Discharge Elimination (NPDES) Phase II Permit, the City has undertaken development of stormwater management policies that will result in improvements in the water quality present in the City's rivers and stream. Part of the City's commitment requires that all new development in the City ensure that stormwater is conveyed in an adequately designed drainage system of natural drainage ways, grass swales, storm sewers, culverts, inlets, and channels. Drainage systems must be designed, constructed, and maintained so as to provide natural infiltration, control velocity, control flooding, extend the time of concentration of stormwater runoff, and to control, to the maximum extent practicable, the export of pollutants and other impacts of development.

New developments and redevelopment that meet the criteria outlined in the City's Stormwater Ordinance must obtain a City of Concord Stormwater Management Permit prior to bidding or beginning construction or any land disturbing activity. In general the Ordinance requires a pre-approved Stormwater Management Permit for:

- All development that will exceed 20,000 square feet of cumulative impervious coverage.
- Any activity that disturbs land within a designated stream buffer area.
- Any filling or excavation of a parcel in excess of 1,000 cubic feet (cf) of material, or any filling or excavation that impacts an adjoining parcel.
- Any activity or development that will ultimately result in the disturbance of a total area of one or more acres.

1.2.6 Financial Responsibility

City policy requires that developers pay for all stormwater management facilities that directly serve their development. These facilities shall be adequate to meet the requirements for control and treatment of runoff for each of the design storm events. Property owners are required to operate and maintain such facilities to ensure their proper function and prevent them from becoming a public nuisance.

1.2.7 Design Requirements

The design criteria presented within this Article represent good engineering practice and should be utilized in the preparation of stormwater management plans. The criteria are not intended to be an iron-clad set of rules within which the developer and the design professional must work; they are intended to establish guidelines, standards, and methods for sound planning and design. Alternative methods of design should be submitted to the City for consideration.

The design criteria shall be revised and updated as necessary to reflect advances in the field of urban drainage engineering and urban water resource management.

The City and design professionals will utilize the Article in the planning of new facilities and in their review of proposed work by developers, private parties, and other governmental agencies.

The strict application of this Article, in the overall planning of new developments, is practical and economical. In the planning of drainage improvements and the designation of floodplains for built-up areas, the use of the criteria and standards herein may be adjusted as determined by the City.

1.3 DESIGN POLICY

1.3.1 Design Storm Frequencies

Every area shall be evaluated for two distinct stormwater management purposes: maintaining effective drainage systems and maintaining and improving water quality. Design for the more frequent storm events such as the 1- and 10-year storms serve both drainage and water quality protection purposes. Design for the larger events (25, 50, and 100-year storms) is focused on preventing damage and protecting health and safety.

Table 1-1, on the next page, lists the design storm frequencies for the various components of the stormwater management systems. Section 2 Stormwater Runoff, of this Article, provides the design storm precipitation for the City associated with the design storm frequencies.

TABLE 1-1
DESIGN STORM FREQUENCIES

Description	Design Storm Frequency
Piped Storm Sewer Systems	10-year, 24-hour
Drainage Ditches	10-year, 24-hour
Culverts and Bridges:	
Alley or Local Street	25-year, 24-hour
Collector	25-year, 24-hour
Thoroughfare	50-year, 24-hour
Freeway	100-year, 24-hour
Water Quality BMPs:	
Swales and Other Minor Facilities	1-year, 24-hour and 10-year, 24-hour
Infiltration Basins and Filters	1-year, 24-hour and 10-year, 24-hour
Wet and Dry Detention Basins	1-year, 24-hour and 10-year, 24-hour
Flood Control Detention Basins	According to most restrictive downstream condition, see Section 1.3.4
Detention Basin Emergency Spillways	Per NC Dam Safety Standards
Major Channels and Drainageways	100-year, 24-hour

Major Storm Provisions (100-year Return Frequency)

Provisions shall be made to prevent major property damage and loss of life for the storm runoff expected to have a one percent chance of occurring in any single year.

1.3.2 Hydrologic Analysis

The determination of runoff magnitude shall be accomplished using the Rational Method, the Soil Conservation Service (SCS) Unit Hydrograph (UH) methods as presented in TR55 and SWMM, a Kinematic Wave Method, or other computer modeling techniques and acceptable methods as approved by the City. Guidelines and limitations on application of several methods are presented in Section 2 Stormwater Runoff.

Computer Models

Approval by the City must be obtained before using hydrologic and hydraulic models other than those identified in this Article. The most recent, or other approved, version of the chosen model must be used.

1.3.3 Maximum Permissible Flooding

It is desirable to minimize the use of streets as a conveyance for storm runoff. However, streets are significant and important in urban drainage and can be used for storm runoff up to reasonable limits, recognizing that the primary purpose of streets is for traffic. All new conveyance systems shall be sized to convey the design storm event. Streets may be used to convey local runoff to drain inlets. Limits of the use of streets for conveying storm runoff shall be governed by the design criteria in Table 1-2.

TABLE 1-2
MINOR STORM RUNOFF ALLOWABLE STREET USE

Street Classification	Maximum Pavement Encroachment
Alley and Local Street	Flow may spread to crown of street. Velocities may not exceed 8 feet per second. No curb overtopping.
Collector	Flow spread must leave at least one half of a travel lane in each direction free of water. Velocities may not exceed 8 feet per second. No curb overtopping.
Thoroughfare	Flow spread must leave at least one lane in each direction free of water. Velocities may not exceed 8 feet per second. No curb overtopping.
Freeway	No encroachment is allowed on any travel lanes.

When the above maximum encroachment is reached, measures to reduce the flow, additional storm inlets, or other measures are required. Stormwater runoff conveyed through streets must be controlled and treated to the Maximum Extent Practicable before it is discharged to the City's municipal storm sewer system or receiving waters.

Planning and design objectives for public streets shall be based upon the limiting criteria in Table 1-3.

TABLE 1-3
MAJOR STORM RUNOFF ALLOWABLE STREET INUNDATION

Street Classification	Allowable Depth and Inundated Areas
Alley and Local Street	The depth of water over the gutter flow line shall not exceed 12 inches. Velocities shall not exceed 8 feet per second.
Major Collector and Both Thoroughfares	The depth of water at the street crown shall not exceed 6 inches in order to allow operation of emergency vehicles. The depth of water over the gutter flow line shall not exceed 12 inches. Velocities shall not exceed 8 feet per second.
Freeway	No inundation is allowed.

The allowable flow across streets shall be limited within the criteria shown in Table 1-4.

TABLE 1-4
MAJOR STORM RUNOFF ALLOWABLE CROSS STREET FLOW

Street Classification	Maximum Cross Flow Depth
Alley and Local Street	12 inches
Collector and Thoroughfare	6 inches or less over crown
Freeway	None

1.3.4 Stormwater Detention

Stormwater detention is required where necessary to limit flows such that the post-development peak discharge rate of flow does not exceed the pre-development rate for the 1-year, 24-hour and the 10-year, 24-hour storm events. This requirement may be waived when the development is part of a larger master plan approved by the City and which contains higher or lower discharge limitations for a particular area. Runoff volume drawdown time shall be a minimum of 24 hours, but not more than 120 hours.

Stormwater detention facilities shall be designed to achieve an 85 percent reduction (by weight) in the export of total suspended solids on an average annual basis. All detention facilities shall be designed to control and treat, at a minimum, the difference in runoff from pre- and post development conditions from the area draining to the facility.

Wherever reasonably acceptable from a social standpoint, parks and other open space may be used for short-term detention of storm runoff to create drainage benefits.

Maintenance of detention facilities entails the removal of debris and sediment. Without proper maintenance, a detention facility will become unsightly, a social liability, and eventually ineffective for water detention and treatment. Detention facilities will not be approved unless adequate maintenance can be provided. A maintenance plan and agreement must be filed with the City to ensure that the owner of the facilities understands the required frequency and type of maintenance necessary for proper operation of such facilities. Easements in favor of the City must be provided for emergency maintenance by the City when a property owner defaults on the maintenance agreement. Emergency maintenance performed or directed by the City shall be completed at the cost of the owner of the detention facility. Property owners are responsible for the maintenance and upkeep of the easement area. No permanent structures or other impediments to access shall be constructed within the area of easement.

Allowable Release Rates for Future Development

The allowable release rates from future developments shall not exceed the pre-development discharge rate for the specified design storms except as elsewhere provided for in this Article.

1.3.5 Natural Drainageways

The use of naturally occurring channels and drainageways is desired. Major consideration must be given to the floodplains and open space requirements for the area.

Natural drainageways within an urbanizing area are too often deepened, straightened, lined, and put underground. A community loses a natural asset when this happens. Channelizing a natural waterway usually speeds up the flow, causing greater downstream peaks and higher drainage costs downstream. Therefore, alternatives which include new or reconstructed drainage channels should be carefully weighed against the positive environmental and financial considerations of maintaining a natural drainageway.

Drainageways having slow flow, grassy bottoms and sides, and wide water surfaces provide significant water quality benefits and storage capacity. This storage is beneficial in that it reduces downstream pollutant loadings and runoff peaks. This reduces measures needed downstream to offset the impacts of development.

The depth of flow in the receiving stream must be taken into consideration for backwater computations for both the design and the major storm event, when sizing channel cross sections.

Significant changes to natural drainageways shall not be allowed unless computations show that changes will not adversely impact the channel or adjacent downstream development or have an adverse impact upon water quality.

A permanent maintenance access corridor easement shall be required with all constructed drainage channels. This easement shall provide a minimum access width of 20 feet from the top of bank on each side of the channel unless otherwise designated by the City. A wider easement will be required for River/Stream Overlay Districts and Stream Buffers on all intermittent and perennial streams as set forth by Article 4 of the Concord Development Ordinance and by the City's Stormwater Ordinance.

1.3.6 Sediment and Erosion Control

All new developments during construction shall be required to provide interim erosion and sedimentation control facilities to prevent the discharge of material into established drainageways or receiving bodies of water. Developments resulting in disturbance of 1 acre or more must provide the City's Stormwater Administrator with an approved Cabarrus County Erosion and Sediment Control Plan.

The City reserves the right to inspect for compliance with an approved Erosion and Sediment Control Plan and to take, or cause the developer to take, immediate corrective actions of any violations of such a plan.

1.3.7 Basin Planning

The City may, from time to time, develop and adopt watershed master plans that contain requirements specific to certain areas within the City's jurisdiction. Where such a watershed master plan has been adopted, all new development within the City shall conform to the approved plan. If no plan exists for that area of the proposed development, the City may waive this requirement, require the development to provide the necessary data, or declare a "special study area" until the watershed master plan for that area is completed. Interim plans may be accepted, providing they conform to the overall goals and objectives of the Stormwater Management Program and are otherwise consistent with the City's Ordinances and Regulations.

Stormwater Transfer

Planning and design of stormwater drainage systems should not result in the interwatershed transfer of stormwater. Channel modifications that create or increase flooding downstream shall be avoided; both for the benefit of the public and to prevent damage to private parties. Erosion and downstream sediment deposition increase of runoff peaks, and debris transportation must be avoided. It is the responsibility of the owner/developer to document, to the satisfaction of the Stormwater Administrator, that the proposed activity will not create such adverse conditions during the site plan review process.

The development process can significantly alter historical or natural paths. Development outfall systems shall discharge back into the natural drainageway at or near the historical location, unless otherwise approved by the City.

The policy of the City is to avoid transfer of storm drainage runoff from one watershed to another and to maintain historical drainage paths. However, the transfer of drainage from watershed to watershed is a viable alternative in certain instances and will be reviewed on a case-by-case basis by the City.

Floodplains

Certain areas within the City have been designated by the Federal Emergency Management Agency (FEMA) as flood hazard areas. All work impacting or adjacent to these areas shall be in compliance with all current FEMA regulations and permit requirements. The City has designated Floodplain Protection Overlay Districts (FPOD) consistent with Article 4.14 of its Concord Development Ordinance. All developments within a FPOD that apply for a Stormwater Management Permit must document that the development is in full compliance with the FPOD regulations.

Multi-purpose Use

Consideration shall be given to make all stormwater management facilities multipurpose facilities. Small parks, greenways, and other similar facilities shall be incorporated with major stormwater management facilities whenever possible, such that the hydraulic capacity and water quality treatment function of the facility is not compromised by these additional uses. River/Stream Overlay Districts and Stream Buffers shall be used for appropriate recreational and aesthetic purposes whenever feasible.

Access to Drainage Facilities

Easements, rights-of-way, or other legal access shall be provided to all stormwater management facilities for inspection, periodic maintenance, and infrequent repairs. Property owners are responsible for the maintenance and upkeep of the easement area. No permanent structures or other impediments to access shall be constructed within the area of easement.

1.3.8 Stormwater Runoff Quality

The policy of the City of Concord is to include stormwater quality considerations in planning of all stormwater facilities. Sediment, debris and other pollutants must be collected and removed from stormwaters. All stormwater facilities shall be compatible with the City's NPDES Phase II Permit and the Stormwater Management Program approved under that permit. The management of overall water quality of storm drainage will require submittal of a Stormwater Management Plan for new regulated developments (and redevelopments). The City has the right to inspect all construction sites and to enforce provisions of the Sedimentation and Erosion Control Permit and the City's Stormwater Management Permit.

1.3.9 Source and Structural BMPs

It is the policy of the City to encourage non-structural Best Management Practice (BMPs) for stormwater runoff and quality control wherever possible. When structural BMPs are required, they should be located as close to the source of runoff generation as possible. This policy is not intended to prevent the development of stormwater facilities that serve multiple parcels where there is benefit to the City and improvements to the control and treatment of stormwater runoff resulting from those facilities.

1.3.10 Operation and Maintenance

Operation and maintenance of stormwater facilities shall be required to ensure these facilities perform as designed. Prior to the construction of any stormwater management facility, the responsibility for the maintenance and operation of that facility shall be determined and an inspection and maintenance agreement, acceptable to the Stormwater Administrator, shall be filed. Property owners are responsible for the maintenance and upkeep of the facility.

Channel bed and bank erosion, drop structures, trash racks, pipe inlets and outlets, pumping facilities, and overall condition of the facilities shall be inspected as shown in Table 1-5 and repaired as necessary to avoid reduced conveyance capacity and ultimate failure. Sediment and debris shall be removed from channels, storm drains, and detention basins. Trash racks and inlets shall also be routinely cleared of debris to maintain system capacity. BMPs as part of the development shall be periodically serviced and repaired as necessary to keep these facilities functioning properly.

TABLE 1-5
MAINTENANCE SCHEDULE

Facility or Activity	Inspection/Cleaning Frequency	Maintenance Activity
Catch Basins and Manholes	Annually/Annually	Trash, Sediment, and Oil Removal
Pump Stations	Quarterly/During Autumn	Mechanical Checklist Debris Removal
Ditches and Swales	Every Autumn/Monthly during Summer	Mowing and Debris Removal
Drainageways and Streams	Annually or after large storm events/Annually	Grading Repairs (Erosion) Debris Removal
Pipes	Annually and after large storm events/every two to four years	Debris Removal TV Monitoring
Culverts	Annually/Annually	Debris Removal
Detention Facilities	Monthly/Annually City stormwater staff will perform an annual inspection of facility and owner's inspection and maintenance records	Trash, oil, and debris removal Control structure and vegetation control

Vehicle and maintenance equipment access shall be provided to all stormwater for maintenance and inspection. Developers shall be responsible for providing features to facilitate maintenance of drainage systems, including inlets, culverts, channels, ditches, and detention basins.

1.4 STORMWATER MANAGEMENT PLANS

1.4.1 Stormwater Management Plan Requirements

A Stormwater Management Plan shall be prepared for all development except that specifically exempted in the City's Stormwater Ordinance. The purpose of the plan is to identify existing and proposed hydrology and hydraulics of the site and the proposed storm drainage system. The plan shall also propose specific solutions to stormwater problems that would occur as a result of

development. Detailed analysis of drainage basin hydrology and hydraulics is required. Solutions to drainage problems shall be noted and the capacity of facilities on and off-site shall be evaluated. Specific improvements including open channels, storm drains, grading, erosion and sediment control, inlets, culverts, detention/retention basins, and other improvements shall be located and sized to meet the requirements of the drainage systems as described in this Article and in accordance with the appropriate watershed master plan, if available. The drainage plan must describe the general treatment of drainageways, including safety and maintenance, and outline the protection of public facilities and the protection of private property adjacent to the waterways.

It is acknowledged that certain circumstances may preclude the use of certain requirements stipulated in this Article. It shall be the responsibility of the user to provide an explanation of the circumstance, the specific exception(s) requested, the justification(s) for the request, and the mitigative measures to be taken. Whenever a requirement set forth in this Article, or otherwise established by the City, can not be practically achieved, it is the responsibility of the developer to present a mitigation plan that achieves through alternative means substantially the same result as would have been achieved under the City's requirement.

1.4.2 Qualifications

All stormwater management, drainage or related facilities designs that are submitted as part of an application for a City of Concord Stormwater Management Permit shall be reviewed and sealed by a Registered Professional Engineer with a valid license from the state of North Carolina. The design professional shall attest that the design was conducted in accordance with the laws of the State of North Carolina and with policies of the City and with this Article.

1.4.3 Computations

Computations shall be submitted for review to the City and shall be in accordance with the procedures, standards, and criteria of this Article.

1.4.4 Plan Submittal Standards

All designs shall be accompanied by supporting data, graphs, calculations, sketches, and applicable references appropriate to the complexity of the proposed facility.

Plans and profiles shall be drawn on sheets no smaller than 24" x 36" to a horizontal scale of no smaller than 1"=50', and to a vertical scale of 1"=10', collectively referred to as the Site Plan. Exceptions are permitted on specific projects such as culverts and channel cross sections. For the purpose of applying for a Stormwater Management Permit, the Site Plan shall include, at minimum, the following information:

- Address or vicinity map showing the location of the activity.
- Subdivision name and date of the approved subdivision plat, if applicable.
- The date of the subdivision's approved Stormwater Management Permit, if applicable.
- Site boundaries.

- Street and other right-of-ways.
- Existing roadway width and pavement type.
- Stationing shall match street stationing and proceed upstream.
- North arrow shall point to the top of page or to the left.
- Elevation datum shall be United States Geological Survey (USGS).
- Existing and proposed structures and finished floor elevations.
- Existing and proposed driveway locations and types.
- Existing and proposed stormwater facilities (swales, pipes, inlets, basins, etc.).
- General drainage patterns indicated on a topographic map showing 1-foot (or smaller) contour intervals.
- Natural drainageways and direction of flow.
- City designated Stream Buffer overlays.
- Flood boundaries and/or elevations.
- Location and extend, and label the name of, any waterbody that is shown on the most recent version of either the 7.5-minute USGS topographic map or the Natural Resource Conservation Service (NRCS) Soil Survey map.
- Extent and phasing of land disturbing activities. If needed, a separate drawing can be provided for each phase.
- Other information that may be necessary to develop an understanding of the project.

Profiles shall indicate the proposed system (size and type of material) with flow-line elevations, flow-lines, gradients, left and right bank profiles, station numbers, inlets, manholes, ground-line and curb-line elevations, typical cross sections, riprap construction, filling details, minimum permissible building floor elevations within 100-year floodplain and adjacent to open drainage features, pipe crossings, design flow capacities and velocities, and title block.

Detail plans and sections shall be provided for all special system features such as detention/retention facilities, inlets, manholes, culverts, pipe bedding and backfill, ditch sections, and all related structures.

A complete list of the drawing requirements is included on a reproducible sheet included in Appendix A. No text presented on the drawings and documents shall be in a font smaller than 10-point type. The Stormwater Administrator may waive any of the format specifications and required items that are deemed not to be necessary for the review, reproduction, and storage of the documents.

At the City's option, any or all of the above materials may be, or may be required to be, submitted in electronic formats compatible with the Stormwater Administrator's computer systems and software.

1.4.5 Final As-Constructed Documents

Upon completion and final approval by the City, the original mylars depicting as-constructed (built) conditions shall be submitted to the City and shall remain the permanent property of the City. Final documents shall be sealed by a registered professional engineer with a valid license from the State of North Carolina. All associated costs shall be borne by the owner.

At the City's option, the Final As-Constructed documents may be, or may be required to be, submitted in electronic formats compatible with the Stormwater Administrator's computer systems and software.

1.4.6 Maintenance and Access Agreements and Restrictive Covenants

The City's NPDES Phase 2 permit also requires that provisions be made for the long term ownership and maintenance of stormwater control structures and best management practices. To that end, both Code of Ordinances section 60-88 (c) and Concord Development Ordinance sections 4.4.6. B. and 4.4.6. C. establish certain requirements for long-term maintenance and City access to stormwater control facilities. Specifically, the three ordinance sections require that property owners and developers enter into contracts with the City for access and long-term maintenance of stormwater control facilities. These sections also require developers and property owners to provide for the long term maintenance of future owners by establishing restrictive covenants. Contact the Concord City Attorney for more information on the covenants and maintenance agreements acceptable to the City. The City Attorney may be reached at:

Albert M. Benshoff
City Attorney
Legal Dept
PO Box 308
30 Market St.
Concord, NC 28026-0308
704 920 5114
FAX 704 784 1791
Benshoff@ci.concord.nc.us

1.5 NEW DEVELOPMENT AND REDEVELOPMENT MINIMUM REQUIREMENTS

All new development, including redevelopment, that includes land disturbing activity of one acre or greater shall prepare a Cabarrus County Erosion and Sediment Control Plan. Copies of the approved plan must be delivered to the City of Concord Plan Review Service Center (PRSC) upon submission of an application for a City Stormwater Management Permit.

All new developments, including redevelopments, which are required to obtain a City Stormwater Management Permit, shall meet all the minimum requirements presented in this section.

1.5.1 Minimum Requirement No. 1: Erosion and Sediment Control

All new development and redevelopment that includes land disturbing activities of ≥1 acre shall comply with all Cabarrus County Erosion and Sediment Control Requirements. Compliance with the Erosion and Sediment Control Requirements shall be demonstrated through implementation of an approved Erosion and Sediment Control Plan.

In addition, the following erosion and sediment control requirements shall be and are the responsibility of the developer:

No. 1.5.1.1: Protection of Adjacent Properties

Properties adjacent to the project site shall be protected from sediment deposition and are the responsibility of the developer.

No. 1.5.1.2: Protection of Stream Buffers

Designated stream buffers shall be protected from disturbance and all other adverse impact during and after the construction phase. Sediment ponds and traps, sediment barriers, and other appropriate BMPs shall be used to ensure that Buffers are not eroded, receive sediment deposition, or that the vegetation is damaged from the beginning of disturbance through final site stabilization.

No. 1.5.1.3: Controlling Off-Site Erosion

Properties and waterways downstream from development sites shall be protected from erosion due to increases in the volume, velocity, and peak flow rate of stormwater runoff from the project site.

No. 1.5.1.4: Construction Access Routes

Wherever construction vehicle access routes intersect paved roads, provisions must be made to minimize the transport of sediment (mud) onto the paved road. If sediment is transported onto a road surface, the roads shall be cleaned thoroughly at the end of each day. Sediment shall be removed from roads by shoveling or sweeping and be transported to a controlled sediment disposal area. Street washing shall be allowed only after sediment is removed in this manner.

No. 1.5.1.5: Removal of Temporary BMPs

All temporary erosion and sediment control BMPs shall be removed within 30 days after final site stabilization is achieved or after the temporary BMPs are no longer needed. Trapped sediment shall be removed or stabilized onsite. Disturbed soil areas resulting from removal shall be permanently stabilized.

No. 1.5.1.6: Control of Pollutants Other Than Sediment on Construction Sites

All pollutants other than sediment that occur onsite during construction shall be handled and disposed of in a manner that does not cause contamination of stormwater or groundwater.

No. 1.5.1.7: Maintenance

All temporary and permanent erosion and sediment control BMPs shall be maintained and repaired as needed to assure continued performance of their intended function. All maintenance and repair shall be conducted in accordance with recommendations presented in Section 10.

1.5.2 Minimum Requirement No. 2: Preservation of Natural Drainage Systems

Natural drainage patterns shall be maintained, and discharges from the site shall occur at the natural location, to the maximum extent practicable. Use of curb and gutters and other methods of development that disrupt the maintenance of sheet flow and the natural drainage patterns shall be minimized to the extent practicable and permissible by the Concord Development Ordinance.

1.5.3 Minimum Requirement No. 3: Preservation of Stream Buffers

The City has designated River/Stream Overlay Districts as described in Article 4 of the Concord Development Ordinance. In addition, the City's Stormwater Management Program requires that the stream buffer for a Class l stream shall be an undisturbed area of 50 feet plus four times the average percent slope of the area adjacent to the stream up to a maximum of 125 feet. An additional 20 foot vegetated setback from the stream buffer is required on all Class 1 streams.

For Class 2 streams, the stream buffer shall be measured from the average annual stream bank perpendicularly for a distance of 30 feet. No slope adjustments are required. There is an additional 10-foot vegetated setback from the undisturbed stream buffer on Class 2 streams.

Stream buffer areas shall be designated on recorded plats as easements. The plat shall be included with the Application for a Stormwater Management Permit.

All stream buffers shall be maintained by the landowner to maintain sheet flow to the maximum extent practical. Except where no practicable alternative exists, no new stormwater conveyance channels or outfalls may traverse or be constructed in a stream buffer.

Developers must provide certification, acceptable to the Stormwater Administrator that only development or other land disturbing activities that will occur within a designated stream buffer are "exempt or allowed" activities as shown within Table 1-6.

TABLE 1-6
TABLE OF USES AND ACTIVITIES WITHIN CONCORD STREAM BUFFERS

Use/Activity	Exempt	Allowed	Allowable with Mitigation	Prohibited
Airport facilities: ➢ Airport facilities that impact equal to or less than 150 linear feet (LF) or one-third of an acre of stream buffer. ➢ Airport facilities that impact greater than 150 LF or one-third of an acre of stream buffer.		X	X	
Archaeological activities	X			
Bridges		X		
Dam maintenance activities	X			

Use/Activity	Exempt	Allowed	Allowable with Mitigation	Prohibited
Drainage ditches, roadside ditches, and storm water outfalls through stream buffers:				
➢ Existing drainage ditches, roadside ditches, and stormwater outfalls provided that they are managed to minimize the sediment, nutrients and other pollution that convey to water bodies.	X			
➢ New drainage and roadside ditches and stormwater outfalls provided that a stormwater management facility is installed to control pollutant discharge and attenuate flow before the conveyance discharges through the stream buffer.		X		
➢ New drainage and roadside ditches and stormwater outfalls that do not provide control for pollutant discharge before discharging through the stream buffer.				X
➢ Excavation of the streambed in order to bring it to the same elevation as the invert of a ditch.				X
Drainage of a pond in a natural drainageway provided that a new stream buffer meeting the requirements of the City Stormwater Ordinance is established adjacent to the new channel.	X			
Driveway crossings of streams and other surface waters subject to this Rule:				
➢ Driveway crossings on single-family residential lots that disturb equal to or less than 25 LF or 2,500 square feet (SF) of stream buffer.	X			
➢ Driveway crossings on single-family residential lots that disturb greater than 25 LF or 2,500 SF of stream buffer.		X		
➢ In a subdivision that cumulatively disturb equal to or less than 150 LF or one-third of an acre of stream buffer.		X		
➢ In a subdivision that cumulatively disturb greater than 150 LF or one-third of an acre of stream buffer.			X	

Use/Activity	Exempt	Allowed	Allowable with Mitigation	Prohibited
Fences, provided that disturbance is minimized and installation does not result in removal of forest vegetation.	X			
Forest harvesting		X		
Fertilizer application: ➢ One-time fertilizer application to establish replanted vegetation. ➢ Ongoing fertilizer application.	X			X
Grading and revegetation provided that diffuse flow and the health of existing vegetation are not compromised and disturbed areas are stabilized.			X	
Greenway/hiking trails		X		
Historic preservation	X			
Landfills as defined by G.S. 130A-290				X
Mining activities: ➢ Mining activities that are covered by the Mining Act provided that new streams are established adjacent to the relocated channels. ➢ Mining activities that are not covered by the Mining Act or where new stream buffers are not established adjacent to the relocated channels. ➢ Wastewater or mining dewatering wells with approved NPDES permit.	X	X		X
Non-electric utility lines: ➢ Impacts other than perpendicular crossings.			X	

Use/Activity	Exempt	Allowed	Allowable with Mitigation	Prohibited
Non-electric utility line perpendicular crossing of streams and other surface waters.				
➢ Perpendicular crossings that disturb equal to or less than 40 LF of stream buffer with a maintenance corridor equal to or less than 10 feet in width.	X			
➢ Perpendicular crossings that disturb greater than 40 LF of stream buffer with a maintenance corridor greater than 10 feet in width.		X		
➢ Perpendicular crossings that disturb greater than 40 LF but equal to or less than 150 LF of stream buffer with a maintenance corridor equal to or less than 10 feet in width.		X		
➢ Perpendicular crossings that disturb greater than 40 LF but equal to or less than 150 LF of stream buffer with a maintenance corridor greater than 10 feet in width.			X	
➢ Perpendicular crossings that disturb greater than 150 LF of stream buffer.			X	
On-site sanitary sewage systems - new ones that utilize ground absorption.				X
Overhead electric utility lines:				
➢ Impacts other than perpendicular crossings.			X	
Overhead electric utility line perpendicular crossings of streams and other surface waters.				
➢ Perpendicular crossings that disturb equal to or less than 150 LF of stream buffer.	X			
➢ Perpendicular crossings that disturb greater than 150 LF of stream buffer.			X	
Periodic maintenance of modified natural streams such as canals and a grassed travelway on one side of the surface water when alternative forms of maintenance access are not practical.		X		

Use/Activity	Exempt	Allowed	Allowable with Mitigation	Prohibited
Playground equipment: ➢ Playground equipment on single-family lots provided that installation and use does not result in vegetation removal. ➢ Playground equipment installed on lands other than single-family lots or that requires vegetation removal.	X		X	
Ponds in natural drainageways, excluding dry ponds: ➢ New ponds provided that a stream buffer that meets the City's requirements is established adjacent to the pond. ➢ New ponds where a stream buffer is NOT established adjacent to the pond.		X	X	
Protection of existing structures, facilities, and streambanks when this requires additional disturbance of the stream buffer or the stream channel.			X	
Railroad impacts other than crossings of streams and other surface waters.			X	
Railroad crossings of streams and other surface waters subject to this Rule: ➢ Railroad crossings that impact equal to or less than 40 LF of stream buffer. ➢ Railroad crossings that impact greater than 40 LF but equal to or less than 150 LF or one-third of an acre of stream buffer. ➢ Railroad crossings that impact greater than 150 LF or one-third of an acre of stream buffer.	X	X	X	
Removal of previous fill or debris provided that diffuse flow is maintained and any vegetation removed is restored.		X		

Use/Activity	Exempt	Allowed	Allowable with Mitigation	Prohibited
Road crossings of streams and other surface waters: ➢ Road crossings that impact equal to or less than 40 LF of stream buffer. ➢ Road crossings that impact greater than 40 LF but equal to or less than 150 LF or one-third of an acre of stream buffer. ➢ Road crossings that impact greater than 150 LF or one-third of an acre of stream buffer.	X	X	X	
Scientific studies and stream gauging.	X			
Stormwater management ponds excluding dry ponds: ➢ New stormwater management ponds provided that a stream buffer is established adjacent to the pond. ➢ New Stormwater management ponds where a stream buffer is NOT established adjacent to the pond.		X	X	
Stream restoration	X			
Streambank stabilization		X		
Temporary roads: ➢ Temporary roads that disturb less than or equal to 2,500 SF provided that vegetation is restored within six months of initial disturbance. ➢ Temporary roads that disturb greater than 2,500 SF provided that vegetation is restored within six months of initial disturbance. ➢ Temporary roads used for bridge construction or replacement provided that restoration activities, such as soil stabilization and revegetation, are conducted immediately after construction.	X	X X		

Use/Activity	Exempt	Allowed	Allowable with Mitigation	Prohibited
Temporary sediment and erosion control devices:				
➢ To control impacts associated with uses approved by the Division of Water Quality (DWQ) or that have received a variance provided that sediment and erosion control for upland areas is addressed to the maximum extent practical outside the buffer.		X		
➢ In-stream temporary erosion and sediment control measures for work within a stream channel.		X		
Underground electric utility lines:				
➢ Impacts other than perpendicular crossings.			X	
Underground electric utility line perpendicular crossings of streams and other surface waters.				
➢ Perpendicular crossings that disturb less than or equal to 40 LF of stream buffer.	X			
➢ Perpendicular crossings that disturb greater than 40 LF of stream buffer.		X		
Vegetation management:				
➢ Emergency fire control measures provided that topography is restored.	X			
➢ Planting vegetation to enhance the stream buffer.	X			
➢ Pruning forest vegetation, including understory vegetation, provided that the health and function of the vegetation is not compromised.	X			
➢ Removal of individual trees that are in danger of causing damage to dwellings, other structures or human life.	X			
➢ Removal of poison ivy.	X			
➢ Removal of understory nuisance vegetation as defined in: Smith, Cherri L. 1998, Exotic Plant Guidelines; Department of Environment and Natural Resources, Division of Parks and Recreation, Raleigh, NC, Guideline #30.	X			

Use/Activity	Exempt	Allowed	Allowable with Mitigation	Prohibited
Water dependent structures as defined in 15A NCAC 2B .0202.		X		
Water supply reservoirs: ➢ New reservoirs provided that a stream buffer is established adjacent to the reservoir. ➢ New reservoirs where a Stream Buffer is NOT established adjacent to the reservoir.		X	X	
Water wells	X			
Wetland restoration	X			

1.5.4 Minimum Requirement No. 4: Source Control of Pollution

Source control BMPs shall be applied to all projects to the maximum extent practicable. Source control BMPs shall be selected, designed, and maintained according to all known and reasonable technology.

1.5.5 Minimum Requirement No. 5: Runoff Treatment BMPs

All projects shall provide treatment of stormwater. Treatment BMPs shall be sized to capture and treat the water quality design storm. The first priority for treatment shall be to filter and infiltrate as much as possible of the water quality design storm, defined as the runoff produced by the 1-year, 24-hour storm or the first inch of runoff, whichever is more, but only if site conditions are appropriate and groundwater quality will not be impaired.

Stormwater treatment BMPs shall not be built within a designated stream buffer, except for necessary conveyance systems as approved by the City or when an appropriate stream buffer is established and maintained around the BMP.

1.5.6 Minimum Requirement No. 6: Streambank Erosion Control

The requirement below applies only to situations where stormwater runoff is discharged to a stream, and must be met in addition to meeting all other minimum requirements.

Stormwater discharges to streams shall control streambank erosion by limiting the peak rate of runoff from individual development sites to no more than the existing condition peak runoff rate for the 1-year, 24-hour and the 10-year, 24-hour design storms. As the first priority, streambank erosion control BMPs shall utilize infiltration to the fullest extent practicable, but only if site conditions are appropriate and groundwater quality is protected.

Stormwater treatment BMPs shall not be built within a designed stream buffer, except where a recorded conservation easement of an area equivalent to the stream buffer is established around the BMP, where appropriate vegetation is established and maintained within that conservation easement, and where approved by the City Stormwater Administrator.

1.5.7 Minimum Requirement No. 7: Wetlands

The requirements below apply only to situations where stormwater discharges through a conveyance system into a wetland.

1. Stormwater discharges to wetlands must be controlled and treated to the extent necessary to meet the State Water Quality Standards.

2. Discharges to wetlands shall maintain the hydroperiod and flows of existing site conditions to the extent necessary to protect the characteristic uses of the wetland. Prior to discharging to a wetland, alternative discharge locations shall be evaluated, and natural water storage and infiltration opportunities outside the wetland shall be maximized.

3. Created wetlands that are intended to mitigate the loss of wetland acreage, function, and value shall also not be designed to treat stormwater.

4. In order for constructed wetlands to be considered treatment systems, they must be constructed on sites that are not wetlands and they must be managed for stormwater treatment. If these systems are not managed and maintained for a period exceeding three years, these systems may no longer be considered constructed wetlands. Discharges from constructed wetlands to waters of the state (including discharges to natural wetlands) are regulated under Section 404 of the Clean Water Act.

1.5.8 Minimum Requirement No. 8: Water Quality Sensitive Areas

Where the City determines that the minimum requirements do not provide adequate protection of water quality sensitive areas, either onsite or within the basin, more stringent controls shall be required to protect water quality.

1.5.9 Minimum Requirement No. 9: Off-Site Analysis and Mitigation

All major development projects, as designated by the Stormwater Administrator, shall conduct an analysis of off-site water quality impacts resulting from the project and shall mitigate these impacts. The analysis shall extend a minimum of one-fourth of a mile downstream from the project. The existing or potential impacts to be evaluated and mitigated shall include, at a minimum, but not be limited to:

- Excessive sedimentation

- Streambank erosion
- Discharges to groundwater contributing or recharge zones
- Violations of water quality standards
- Spills and discharges of priority pollutants

1.5.10 Minimum Requirement No. 10: Watershed Master Planning

Adopted and implemented watershed master plans may be used to modify any or all of the minimum requirements, provided that the level of protection for surface or groundwater achieved by the master plan will equal or exceed that which would be achieved by the minimum requirements in the absence of a basin plan. Watershed master plans shall evaluate and include, as necessary, retrofitting of BMPs for existing development and/or redevelopment in order to achieve watershed-wide pollutant reduction goals. Standards developed from master plans shall not modify any of the above requirements until the basin plan is formally adopted and fully implemented by the City.

1.5.11 Minimum Requirement No. 11: Operation and Maintenance

An operation and maintenance schedules and agreements shall be provided for all proposed stormwater facilities and BMPs, and the party (or parties) responsible for maintenance and operation shall be identified.

1.5.12 Minimum Requirement No. 12: Financial Liability

Performance bonding or other appropriate financial instruments may be required for any project in order to ensure compliance with these standards.

1.5.13 Exceptions

Exceptions to minimum requirements Nos. 1 through 11 may be granted prior to permit approval and construction. An exception may be granted, provided that a written finding of fact is prepared, that addresses the following:

1. The exception provides equivalent environmental protection and is in the overriding public interest; and that the objectives of safety, function, environmental protection and facility maintenance, based upon sound engineering, are fully met.

2. That there are special physical circumstances or conditions affecting the property such that the strict application of these provisions would deprive the applicant of all reasonable use of the parcel of land in question, and every effort to find creative ways to meet the intent of the minimum requirements has been made.

3. That the granting of the exception will not be detrimental to the public health and welfare, nor injurious to other properties in the vicinity and/or downstream, and to the quality of waters of the state.

4. The exception is the least possible exception that could be granted to comply with the intent of the minimum requirements.

1.6 SMALL PARCEL MINIMUM REQUIREMENTS

Many developments will not require a City Stormwater Management Permit. These developments meet the following criteria:

- Less than 1 acre will be ultimately disturbed by the development.
- Less than 20,000 SF of impervious area will be ultimately created by the development.
- Less than 1,000 CF of fill or excavation will occur during the development.
- The ultimate impervious percentage of the parcel will be less than 24 percent.

Developments meeting the above criteria still must control erosion and sedimentation and control and treat stormwater runoff. In general these developments must ensure that stormwater is conveyed in an adequately designed drainage system of natural drainage ways, grass swales, and other conveyances that are constructed and maintained to provide natural infiltration, control flow velocities, control flooding, extend the time of concentration of stormwater runoff, and to control to the maximum extent practicable the export of pollutants and other impacts of development.

The following minimum requirements shall be met for all such new developments:

1.6.1 Small Parcel Requirement No. 1: Construction Access Route

Construction vehicle access shall be, whenever possible, limited to one route. Access points shall be stabilized with quarry spall or crushed rock to minimize the tracking of sediment onto public roads and shall be the responsibility of the developer.

1.6.2 Small Parcel Requirement No. 2: Stabilization of Denuded Areas

All exposed and unworked soils shall be stabilized by suitable application of BMPs, including, but not limited to, sod or other vegetation, plastic covering, mulching, or application of ground base on areas to be paved. From October 1 through April 30, no soils shall remain exposed for more than two days. From May 1 through September 30, no soils shall remain exposed for more than seven days.

1.6.3 Small Parcel Requirement No. 3: Protection of Adjacent Properties

Adjacent properties shall be protected from sediment deposition by appropriate use of vegetative buffer strips, sediment barriers or filters, dikes or mulching, or by a combination of these measures and other appropriate BMPs.

1.6.4 Small Parcel Requirement No. 4: Maintenance

All erosion and sediment control BMPs shall be regularly inspected and maintained to ensure continued performance of their intended function.

1.6.5 Small Parcel Requirement No. 5: Other BMPs

As required by the City, other appropriate BMPs to mitigate the effects of increased runoff shall be applied.

This Page Intentionally Left Blank.

SECTION 2
STORMWATER RUNOFF

Page

LIST OF TABLES

LIST OF FIGURES

2.1 INTRODUCTION

Hydrology is the scientific study of water and its properties, distribution, and effects on the earth's surface, soil, and atmosphere. Hydrologic analyses include estimation of peak runoff rates, volumes, and time distribution of stormwater runoff flows and are fundamental in the design of stormwater management facilities. This section addresses the movement of water over land resulting directly from precipitation in the form of stormwater runoff.

Land development changes how a watershed responds to precipitation. The most common effects are reduced infiltration and decreased travel time. Increased impervious surfaces and runoff velocities increase peak flow discharge volumes and rates. Total stormwater runoff volume is determined by the total drainage area of the receiving watershed, its infiltration characteristics, and the amount of precipitation.

2.2 DESIGN CRITERIA

This section presents rainfall data for storm events in the City of Concord (City) with recurrence intervals of 1-, 2-, 5-, 10-, 25-, 50-, and 100-years. A storm event with a 100-year recurrence interval is a storm with a magnitude that, on the average, has a one percent chance of being equaled or exceeded in any given year. A 2-year storm has a 50 percent chance of being equaled or exceeded in any given year. The type of storm distribution to be used, as well as criteria for selecting which recurrence interval to use as a design storm, is presented in Section 1.3, Design Policy

2.2.1 Design Storm Distribution and Hytegraph

All storm event hydrograph methods require the input of a rainfall distribution or design storm hyetograph. The design storm hyetograph is essentially a plot of rainfall depth versus time for a given design storm frequency and duration. It is usually presented as a dimensionless plot of unit rainfall depth (increment of rainfall depth for each time interval divided by the total rainfall depth) versus time (presented in Figure 2-1, on page 2-3). The total 24-hour rainfall volumes for the 1-, 2-, 5-, 10-, 25-, 50-, and 100-year storm events are provided in Table 2-1. The hyetograph provided in this section is to be used for all hydrograph analysis. The hyetograph (presented in Table 2-2, on page 2-4) is required for all design storms of 24-hour duration. It is the standard Soil Conservation Service (SCS) Type II rainfall distribution in 10-minute time intervals.

TABLE 2-1
APPROXIMATE 24-HOUR RAINFALL VOLUMES FOR CONCORD, NC

Return Interval	24-hour Volume (inches)
1-year	2.9
2-year	3.5
5-year	4.4
10-year	5.1
25-year	6.0
50-year	6.8
100-year	7.6

2.2.2 Intensity-Duration-Frequency Curves

Intensity-duration-frequency (IDF) curves have been developed for the area and are shown in Figure 2-2, on page 2-5. The curves for 1-, 2-, 5-, 10-, 25-, 50-, and 100-year storm events with durations from 5 minutes to 24 hours. Ordinates from the Figure 2-2 have been provided in Table 2-3, on page 2-5.

2.2.3 Design Storm Recurrence Intervals

The selection of the recurrence interval to be used for the design storm shall be in accordance with Section 1.3, Design Policy.

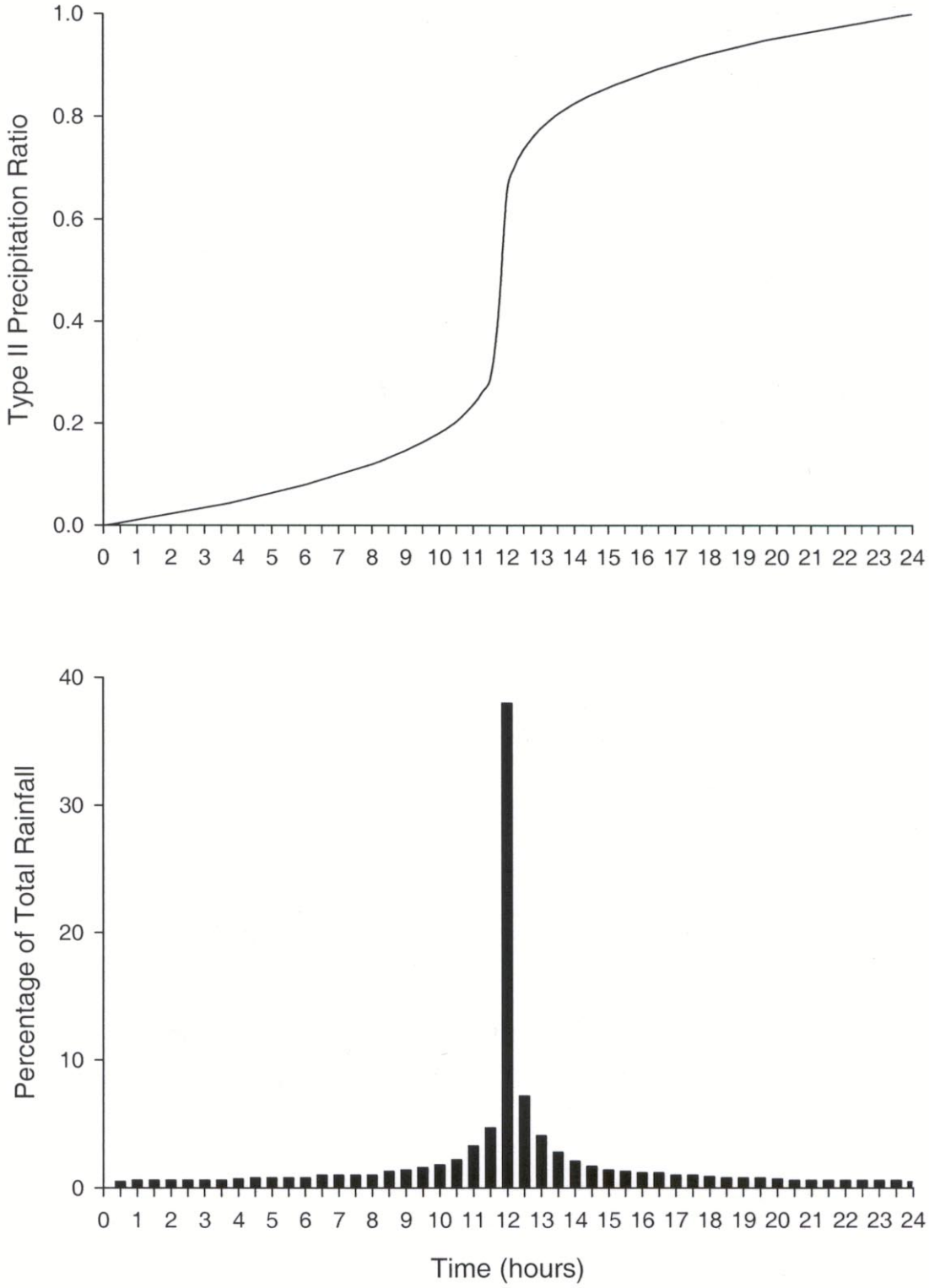

Figure 2-1 24-Hour Design Storm Hyetograph SCS Type II Precipitation Distribution

TABLE 2-2
ORDINATES OF THE SCS TYPE II RAINFALL DISTRIBUTION HYETOGRAPH

Time from Beginning of Storm (Minutes)	Percent Rainfall (%)	Cumulative Percent Rainfall (%)	Time from Beginning of Storm (Minutes)	Percent Rainfall (%)	Cumulative Percent Rainfall (%)	Time from Beginning of Storm (Minutes)	Percent Rainfall (%)	Cumulative Percent Rainfall (%)
0	0.00	0.00	490	0.40	12.40	970	0.40	88.50
10	0.13	0.13	500	0.43	12.83	980	0.40	88.90
20	0.17	0.30	510	0.47	13.30	990	0.40	89.30
30	0.20	0.50	520	0.47	13.77	1000	0.33	89.63
40	0.20	0.70	530	0.46	14.23	1010	0.34	89.97
50	0.20	0.90	540	0.47	14.70	1020	0.33	90.30
60	0.20	1.10	550	0.53	15.23	1030	0.33	90.63
70	0.20	1.30	560	0.54	15.77	1040	0.34	90.97
80	0.20	1.50	570	0.53	16.30	1050	0.33	91.30
90	0.20	1.70	580	0.6	16.90	1060	0.33	91.63
100	0.20	1.90	590	0.60	17.50	1070	0.30	91.93
110	0.20	2.10	600	0.60	18.10	1080	0.27	92.20
120	0.20	2.30	610	0.67	19.33	1090	0.27	92.47
130	0.20	2.50	620	0.73	19.50	1100	0.26	92.73
140	0.20	2.70	630	0.80	20.30	1110	0.27	93.00
150	0.20	2.90	640	1.00	21.30	1120	0.27	93.27
160	0.20	3.10	650	1.10	22.40	1130	0.26	93.53
180	0.20	3.30	660	1.20	23.60	1140	0.27	93.80
170	0.20	3.50	670	1.40	25.00	1150	0.27	94.07
190	0.20	3.70	680	1.57	26.57	1160	0.26	94.33
200	0.20	3.90	690	1.73	28.30	1170	0.27	94.60
210	0.20	4.10	700	6.93	35.23	1180	0.27	94.87
220	0.20	4.30	710	12.67	47.90	1190	0.23	95.10
230	0.23	4.53	720	18.40	66.30	1200	0.20	95.30
240	0.27	4.80	730	2.93	69.23	1210	0.20	95.50
250	0.27	5.07	740	2.40	71.63	1220	0.20	95.70
260	0.26	5.33	750	1.87	73.50	1230	0.20	95.90
270	0.27	5.60	760	1.53	75.03	1240	0.20	96.10
280	0.27	5.87	770	1.37	76.40	1250	0.20	96.30
290	0.26	6.13	780	1.20	77.60	1260	0.20	96.50
300	0.27	6.40	790	1.00	78.60	1270	0.20	96.70
310	0.27	6.67	800	0.93	79.53	1280	0.20	96.90
320	0.26	6.93	810	0.87	80.40	1290	0.20	97.10
330	0.27	7.20	820	0.73	81.13	1300	0.20	97.30
340	0.27	7.47	830	0.70	81.83	1310	0.20	97.50
350	0.26	7.73	840	0.67	82.50	1320	0.20	97.70
360	0.27	8.00	850	0.60	83.10	1330	0.20	97.97
370	0.33	8.33	860	0.57	83.67	1340	0.20	98.10
380	0.34	8.67	870	0.53	84.20	1350	0.20	98.30
390	0.33	9.00	880	0.47	84.67	1360	0.20	98.50
400	0.33	9.33	890	0.46	85.13	1370	0.20	98.70
410	0.34	9.67	900	0.47	85.60	1380	0.20	98.90
420	0.33	10.00	910	0.47	86.07	1390	0.20	99.10
430	0.33	10.33	920	0.43	86.50	1400	0.20	99.30
440	0.34	10.67	930	0.40	86.90	1410	0.20	99.50
450	0.33	11.00	940	0.40	87.30	1420	0.20	99.70
460	0.33	11.33	950	0.40	87.70	1430	0.17	99.87
470	0.34	11.67	960	0.40	88.10	1440	0.13	100.00
480	0.33	12.00						

Source: SCS TR-20 Manual

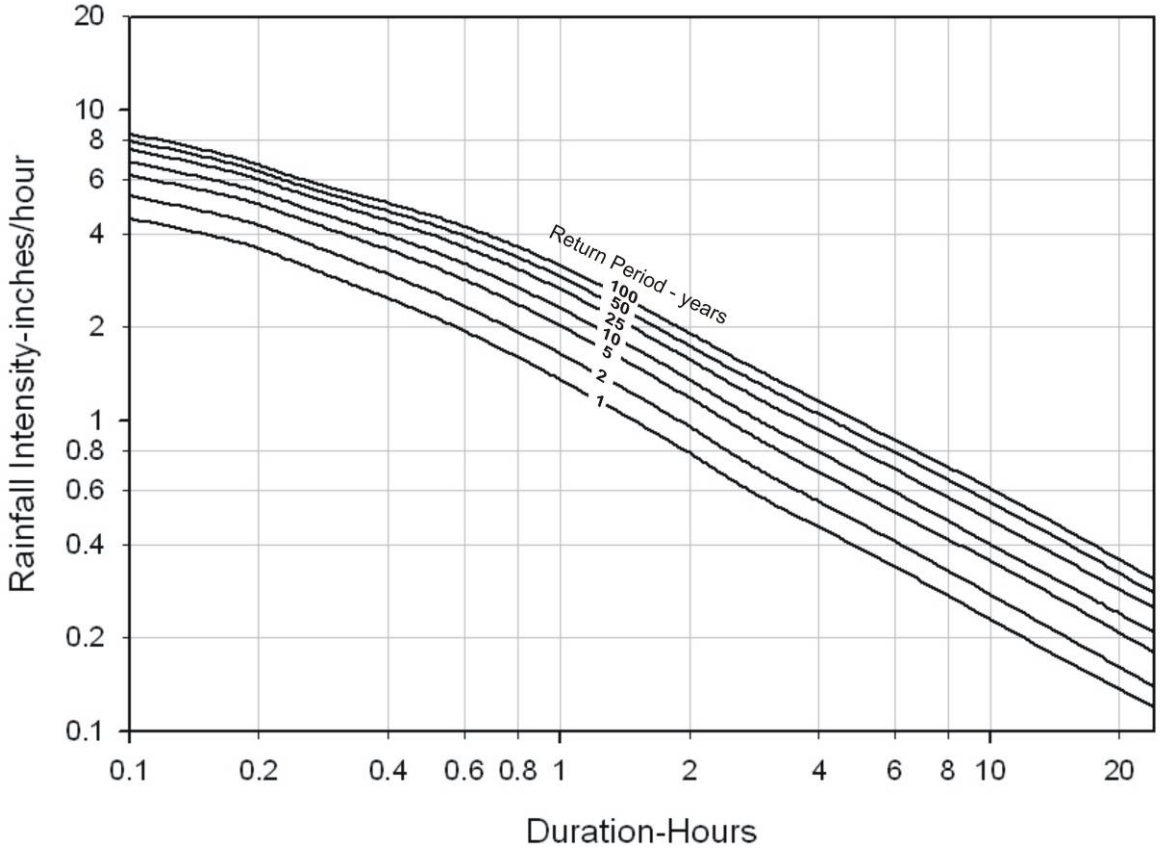

Figure 2-2 Intensity-Duration-Frequency Curves for Concord, NC

TABLE 2-3
ORDINATES OF THE IDF CURVES FOR CONCORD, NC

Duration		Return Period (years)						
Hours	**Minutes**	**1**	**2**	**5**	**10**	**25**	**50**	**100**
0	5	4.80	5.66	6.60	7.26	8.00	8.52	8.98
	10	3.83	4.54	5.29	5.81	6.38	6.78	7.13
	15	3.19	3.80	4.46	4.90	5.39	5.72	6.01
	30	2.19	2.62	3.17	3.55	3.99	4.31	4.60
1		1.36	1.65	2.03	2.31	2.66	2.92	3.17
2		0.79	0.96	1.19	1.36	1.58	1.75	1.92
3		0.56	0.68	0.85	0.98	1.15	1.29	1.42
6		0.34	0.41	0.51	0.59	0.70	0.79	0.87
12		0.20	0.24	0.31	0.35	0.42	0.48	0.53
24		0.12	0.14	0.18	0.21	0.25	0.28	0.31

2.3 HYDROLOGIC METHODS

The design of properly sized storm drainage facilities requires some knowledge of the hydrologic behavior of the drainage basin under study. For most designs it is adequate to estimate only the peak discharge of the drainage area for the required frequency. While larger, more complex drainage basins may require the use of a method in order to estimate the discharge hydrograph. Two methods are presented in this section to satisfy their needs.

The Rational Method is recommended for street drainage and small drainage basins. It is an effective method for estimating peak discharges in small areas where rainfall intensity tends to be uniform for the area. Although the basic principles of the Rational Method apply to drainage areas greater than 20 acres, practice generally limits its use to some maximum area (50 acres).

For larger areas, storage and subsurface drainage flow cause an attenuation of the runoff hydrograph so that the rates of flow tend to be overestimated by the Rational Method. Because of the trend for overestimation of flows and the additional cost in drainage facilities associated with this overestimating, the application of a more sophisticated runoff computation technique is usually warranted for larger drainage areas. These larger drainage basins (0 to 2,000 acres) are modeled effectively by the SCS UH Method. This procedure is suitable for applications where the shape of the hydrograph and the volume of runoff are necessary, such as the design of detention facilities or water quality facilities.

2.3.1 Rational Method

The Rational Method is an empirical runoff formula that has gained wide acceptance because of its simple, intuitive treatment of peak storm runoff rates for small drainage basins. This method relates runoff to rainfall intensity, surface area, and surface characteristics by the formula:

$$Q = C_f \, CiA \tag{2-1}$$

where:

Q	=	peak runoff rate, in cubic feet per second
C_f	=	frequency factor to adjust the runoff coefficient for less frequent, high intensity storms
C	=	runoff coefficient
I	=	average rainfall intensity, for a duration equal to the time of concentration, in inches per hour
A	=	drainage area of the tributary to the point under consideration, in acres

The Rational Method is based on the following assumptions:

A. The rainfall occurs uniformly over the drainage area.

B. The frequency of the peak discharge is the same as the frequency of the average rainfall intensity (i.e., a 2-year rainfall intensity generates a 2-year discharge).

C. The time of concentration is the time required for runoff to become established and flow from the hydraulically most remote part of the drainage area to the basin outlet. This assumption applies to the most remote in time, not necessarily in distance.

Runoff Coefficient, C

The runoff coefficient, C, is the variable of the Rational Method for which it is most difficult to develop a precise determination. This provides the design professional with a degree of latitude to exercise his or her professional judgment. The following discussion is intended to provide a guide to promote the uniform application of runoff coefficients.

The runoff coefficient, C, accounts for abstractions for losses between rainfall and runoff which may vary with time for a given drainage area. These losses are caused by interception by vegetation, infiltration into permeable soils, retention in surface depressions, and evaporation and transpiration. In determining this coefficient, differing climatological and seasonal conditions, antecedent moisture conditions, and the intensity and frequency of the design storm should be considered.

Table 2-4, on page 2-8, represents recommended C values for various land uses. Where ranges are shown, adjustments should be made for level of development, surface type, soil type, and slope. It is often desirable to develop a composite runoff coefficient based in part on the percentage of different types of surfaces in the drainage area. This procedure can be applied to typical "sample" areas as a guide to the selection of usual values of the coefficient for the entire area. Suggested coefficients with respect to surface types are given in Table 2-5, on page 2-8.

The design professional shall use values in Tables 2-4 and 2-5 as guidance and derivation of these values shall be carefully documented and justified in the design drawings and specifications. Areas not conforming to these descriptions will be evaluated by calculating a composite runoff coefficient. Areas shall be evaluated based upon the ultimate development.

The coefficients in these two tables are applicable for storms of 1- to 10-year frequencies. These coefficients are based on the assumption that the design storm does not occur when the ground surface is frozen. Table 2-6, on page 2-9, represents correction factors to adjust the runoff coefficient for less frequent high intensity storms.

TABLE 2-4
RECOMMENDED RATIONAL METHOD RUNOFF COEFFICIENTS FOR LAND USE

Description of Area		Runoff Coefficient (Up to 10-Year Design Storm)
Business:	Downtown	0.70 to 0.95
	Neighborhood	0.50 to 0.70
Residential	RE – maximum of 1 du/ac	0.35
	RL – maximum of 2 du/ac	0.45
	RM-1 and RM-2 – maximum of 4 du/ac	0.50
	RV – maximum of 8 du/ac	0.57
	RC – maximum of 15 du/ac	0.65
Industrial:	Light	0.50 to 0.80
	Heavy	0.60 to 0.90
Parks and Cemeteries		0.10 to 0.25
Playgrounds		0.20 to 0.40
Railroad Yard		0.20 to 0.40
Unimproved		0.10 to 0.30

TABLE 2-5
SUGGESTED RATIONAL METHOD RUNOFF COEFFICIENTS FOR SURFACE TYPES

Character of Surface		Runoff Coefficient (Up to 10-Year Design Storm)
Pavement :	Asphaltic and Concrete	0.95
	Brick	0.85
Wooded		0.25
Packed gravel areas		0.55
Unpacked gravel areas		0.85
Driveways and Walkways		0.95
Roofs		0.95
Turf Slopes:	Flat, 0 to 1 percent	0.25
	Average, 1 to 3 percent	0.35
	Hilly, 3 to 10 percent	0.40
	Steep, 10 percent +	0.45
Cultivated Ground:	Flat, 0 to 1 percent	0.10
	Average, 1 to 3 percent	0.20
	Hilly, 3 to 10 percent	0.25
	Steep, 10 percent	0.30

TABLE 2-6
FREQUENCY FACTORS FOR THE RATIONAL METHOD

Recurrence Interval (years)	Adjustment Factor, C_f
1 to 10	1.00
25	1.10
50	1.20
100	1.25

Rainfall Intensity, i

Rainfall intensity, i, is the average rate of rainfall in inches per hour. Intensity is selected on the basis of design frequency of occurrence, a statistical parameter established by design criteria, and time of concentration. Rainfall intensity can be determined for the 1-, 2-, 5-, 10-, 25-, 50-, and 100-year return periods from Figure 2-2 and Table 2-3. Note that the total design storm depth (or volume) is not used in the Rational Method. This method determines only the peak discharge rate not the total runoff volume.

Travel Time, T_t

Travel time, T_t, is the time required for water to travel from one location to another in a watershed. T_t is a component of time of concentration (T_c), which is the time for runoff to travel from the hydraulically most distant point of the watershed to the point of design. T_c is computed by summing all the travel times for consecutive components of the drainage conveyance system. T_c influences the shape and peak of the runoff hydrograph. Urbanization usually decreases T_c, thereby increasing the peak discharge; but T_c can be increased as a result of (a) ponding behind small or inadequate drainage systems, including storm drain inlets and road culverts; or (b) reduction of land slope through grading.

T_c is the sum of T_t values for the various consecutive flow segments.

$$T_c = T_{t1} + T_{t2} + \ldots T_{tm} \tag{2-2}$$

where:

T_c = time of concentration, in minutes
m = number of flow segments
T_t = travel time, in minutes

Note: For application within the City, a minimum time of concentration of 5 minutes shall be used for each area or sub area to which the Rational Method is applied.

Travel time (T_t) is the ratio of flow length to flow velocity:

$$T_t = \frac{L}{60\ V} \tag{2-3}$$

where:

T_t	=	travel time, in minutes
L	=	flow length, in feet
V	=	average velocity, in feet per second
60	=	conversion factor from seconds to minutes

Water moves through a watershed as sheet flow, shallow concentrated flow, piped or open channel flow, or some combination of these. The type that occurs is best determined by field inspection and subsequent calculation.

Sheet Flow

Sheet flow is flow over plane surfaces. With sheet flow, the friction value (n_s, a modified Manning's effective roughness coefficient that includes the effect of raindrop impact; drag over the plane surface; obstacles such as litter, crop ridges, and rocks; and erosion and transportation of sediment) is used. These n_s values are for very shallow flow depths (approximately 0.1 foot or less) and are only used for travel lengths up to 300 feet in urban areas and 1,000 feet in non-urban areas. Table 2-7, on the next page, gives Manning's n_s values for sheet flow for various surface conditions.
For sheet flow determination, use Manning's kinematic solution to directly compute T_t:

$$T_t = \frac{0.42(n_s L)^{0.8}}{(P_2)^{0.5}(s_o)^{0.4}} \tag{2-4}$$

where:

T_t	=	travel time, in minutes
n_s	=	sheet flow Manning's effective roughness coefficient (from Table 2-7)
L	=	flow length, in feet
P_2	=	2-year, 24-hour rainfall depth, in inches, (see Table 2-1)
s_o	=	slope of hydraulic grade line, in land slope, feet per foot

TABLE 2-7
ROUGHNESS COEFFICIENTS (MANNING'S n_S)
FOR OVERLAND FLOW

Surface Description		n_s[1]
Smooth Surfaces (concrete, asphalt, gravel, or bare soil)		0.011
Fallow (no residue[2])		0.05
Cultivated Soils:	Residue Cover <20 percent	0.06
	Residue Cover >20 percent	0.17
Grass:	Short Grass Prairie	0.15
	Dense Grasses[3]	0.24
	Bermuda Grass	0.41
Range (natural)		0.13
Woods[4]:	Light Underbrush	0.40
	Dense Underbrush	0.80

1 The values are a composite of information compiled by Engman (1986).
2 Residue cover is cultivated or chopped plant material left on the field to prevent erosion and hold moisture.
3 Includes species such as weeping lovegrass, bluegrass, buffalo grass, blue grama grass, and native grass mixtures.
4 When selecting n_s, consider cover to a height of about 0.1 feet. This is the only part of the plant cover that will obstruct sheet flow.

Velocity Equation

A commonly used method of computing average velocity of flow, once it has measurable depth, is the following equation:

$$V = k\sqrt{s_o} \tag{2-5}$$

where:

V = velocity, in feet per second
k = time of concentration velocity factor, in feet per second
s_0 = slope of flow path, in feet per foot

"k" is computed for various land covers and channel characteristics with assumptions made for hydraulic radius using the following rearrangement of Manning's equation:

$$k = \frac{1.49R^{0.67}}{n} \tag{2-6}$$

where:

R	=	an assumed hydraulic radius
n	=	Manning's roughness coefficient for open channel flow

Typical "k" values are presented in Table 2-8, on the next page.

Shallow Concentrated Flow

Velocities for this type of flow can be calculated using the k_s values from Table 2-8 in which average velocity is a function of watercourse slope and type of channel. After computing the average velocity using the Velocity Equation above, the T_t for the shallow concentrated flow segment can be computed using the Travel Time Equation described above.

Open Channel Flow

Open channels are assumed to begin where the flow enters a definable system. This may include piped systems, ditches, channels visible on aerial photographs, or where lines indicating streams appear (in blue) on United State Geological Survey quadrangle sheets. The k_c values from Table 2-8 used in the Velocity Equation above or water surface profile information can be used to estimate average flow velocity. Average flow velocity is usually determined for bank-full conditions. After average velocity is computed, the T_t for the channel segment can be computed using the Travel Time Equation described above.

Limitations

The following limitations apply in estimating T_t:

- Manning's kinematic solution should not be used for sheet flow longer than 300 feet in urban areas or 1,000 feet in non-urban areas.

- In watersheds with storm sewers, carefully identify the appropriate hydraulic flow path to estimate T_c. Storm sewers generally handle only a small portion of a large event. The rest of the peak flow travels by streets, lawns, and so on, to the outlet. Consult a standard hydraulics textbook to determine average velocity in pipes for either pressure or non-pressure flow.

- A culvert or bridge can act as a reservoir outlet if there is significant storage behind it. A hydrograph should be developed to this point and a stage-storage-discharge technique should be used to determine an outflow rating curve through the culvert or bridge.

TABLE 2-8
"k" VALUES USED IN TRAVEL TIME/TIME OF CONCENTRATION CALCULATIONS

Shallow Concentrated Flow [after the initial 300 feet (1,000 feet in non-urban areas) of sheet flow, R = 0.1]	**k_s**
1. Forest with heavy ground litter and meadows (n = 0.10)	3
2. Brushy on ground with some trees (n = 0.060)	5
3. Fallow or minimum tillage cultivation (n = 0.040)	8
4. High grass (n = 0.035)	9
5. Short grass, pasture and lawns (n = 0.030)	11
6. Nearly bare ground (n = 0.025)	13
7. Paved and gravel areas (n = 0.012)	27
Channel Flow (intermittent - at the beginning of visible channels R = 0.2)	**k_c**
1. Forested swale with heavy ground litter (n = 0.10)	5
2. Forested drainage course/ravine with defined channel bed (n = 0.050)	10
3. Rock-lined waterway (n = 0.035)	15
4. Grassed waterway (n =0.030)	17
5. Earth-lined waterway (n = 0.025)	20
6. CMP pipe (n = 0.024)	21
7. Concrete pipe (0.012)	42
8. Other waterways and pipes	0.508/n[1]
Channel Flow (continuous stream, R = 0.4)	**k_c**
Meandering stream with some pools (n = 0.040)	20
Rock-lined stream (n = 0.035)	23
Grass-lined stream (n = 0.030)	27
Other streams, man-made channels and pipe	0.807/n[1]
[1] Manning's "n" values are based on facility characteristics.	

[PB1]

Example 1: The following is an example of travel time and time of concentration calculations:

Given: An existing drainage basin having a selected flow route composed of the following five segments:

Segment 1: L = 200 feet. Dense grasses (sheet flow)
s_o = 0.03 feet per foot, n_s = 0.24

Segment 2: L = 300 feet. Pasture (shallow concentrated flow)
s_o = 0.04 feet per foot, k_s = 11

Segment 3: L = 50 feet. Small pond (year around)
s_o = 0.00 feet per foot, k_c = 0

Segment 4: L = 300 feet. Grassed waterway (intermittent channel)
s_o = 0.05, k_c = 17

Segment 5: L = 500 feet Grass-lined stream (continuous)
s_o = 0.02, k_c = 27

Calculate T_t's for each reach and then sum them to calculate the drainage basin T_c.

Segment 1: Sheet flow (L<300 *feet*), $T_t = \dfrac{0.42\,(n_s L)^{0.8}}{(P_2)^{0.5}(s_o)^{0.4}}$

$$T_1 = \frac{(0.42)[(0.24)(200\ \textit{feet})]^{0.8}}{(3.5\ \textit{inches})^{0.5}(0.03\ \textit{feet per foot})^{0.4}} = 20.2\ \textit{minutes}$$

Segment 2: Shallow concentrated flow $V = k\sqrt{s_o}$

$$V_2 = (11)(0.04\ \textit{feet per foot})^{0.5} = 2.2\ \textit{feet per second}$$

$$T_2 = \frac{L}{60V} = \frac{(300\ \textit{feet})}{(60\ \textit{seconds per feet})(2.2\ \textit{feet per second})} = 2.3\ \textit{minutes}$$

Segment 3: Flat water surface

T_3 = 0 minutes

Segment 4: Intermittent channel flow $V = k\sqrt{s_o}$

$$V_4 = (17)(0.05\,\textit{feet per foot})^{0.5} = 3.8\,\textit{feet per second}$$

$$T_4 = \frac{(300\ \textit{feet})}{(60\ \textit{seconds per minute})(3.8\ \textit{feet per second})} = 1.3\ \textit{minutes}$$

Segment 5: Continuous stream $V = k\sqrt{s_o}$

$$V_5 = (27)(0.02\,\textit{feet per foot})^{0.5} = 3.8\,\textit{feet per second}$$

$$T_5 = \frac{(500\ \textit{feet})}{(60\ \textit{seconds per minute})(3.8\ \textit{feet per second})} = 2.2\ \textit{minutes}$$

$$T_c = T_1 + T_2 + T_3 + T_4 + T_5$$

$$T_c = 20.2 + 2.3 + 0 + 1.3 + 2.2 = 26\ \textit{minutes}$$

2.3.2 SCS Unit Hydrograph Method

A hydrograph is a graph of the discharge rate versus time, at a particular point. A hydrograph reflects precipitation and watershed characteristics, as well as geologic factors. A hydrograph can be separated into three segments: the rising limb, the crest segment, and the recession limb. The shape of the rising limb is especially sensitive to rainfall characteristics, while the shape of the recession limb is more sensitive to geologic characteristics and watershed slope. The crest segment is sensitive to both watershed and rainfall characteristics. The SCS UH Method may be used for determining peak runoff rates for rural basins with a drainage area of up to 2,000 acres. Other hydrograph methods may only be used with prior written approval by the City.

Additional background on this methodology can be found in "Urban Hydrology for Small Watersheds", Technical Release TR-55 (1986) and SCS National Engineering Handbook, Section 5 (1986). After October 1994, the United States Department of Agriculture Soil Conservation Service (USDA SCS) became known as the Natural Resource Conservation Service (NRCS). Materials and other references are denoted as SCS or NRCS based upon referenced edition or issue date.

Unit Hydrograph Definition

A UH is a special case of the flood hydrograph. Specifically, a UH is the hydrograph that results from one inch of precipitation excess generated uniformly over the watershed at a uniform rate during a specified period of time. There are five important concepts in this definition that warrant emphasis. First, the runoff occurs from precipitation excess, which can be defined as the difference between precipitation and losses. Losses include interception, depression storage, and infiltrated water that does not appear as direct runoff. Second, the volume of runoff is one inch, which is the

same as the volume of precipitation excess. Third, the excess is applied at a constant rate (i.e., uniform rate). Fourth, the excess is applied with a uniform spatial distribution. Fifth, the intensity of the rainfall excess is constant over a specified period of time, which is called the duration.

The SCS method uses a dimensionless UH that is based on an extensive analysis of measured data. Unit hydrographs were evaluated for a large number of actual watersheds and then made dimensionless. An average of these dimensionless UH was developed as shown in Figure 2-3, on page 2-18. The time base of the dimensionless UH was approximately 5 times the time-to-peak and approximately 3/8 of the total volume occurred before the time-to-peak; the inflection point on the recession limb occurs at approximately 1.7 times the time-to-peak, and the UH had a curvilinear shape. The Dimensionless Curvilinear Unit Hydrograph and Equivalent Triangular Hydrograph is shown in Figure 2-4, on page 2-20, and the discharge ratios for selected values of the time ratio are given in Table 2-9.

Lag Time and Concentration Time

Two basic equations are used in defining the shape of the UH. The first equation defines the lag time of the basin, L, or the time from the midpoint of unit excess rainfall to the UH peak, t_p. A number of relationships are given for the dimensions of the SCS synthetic UH (see Figure 2-4, on page 2-20).

Lag time is defined as the time in hours from the center of mass of rainfall excess to peak discharge:

$$L = \frac{\ell^{0.8}(S+1)^{0.7}}{1{,}900y^{0.5}} \tag{2-7}$$

where:

L	=	lag time, in hours
ℓ	=	hydraulic length, in feet
y	=	slope, in percentage
S	=	maximum retention

$$S = \frac{1000}{CN} - 10$$

where:

CN	=	curve number

The time of concentration is related to the lag time by the equation:

$$t_c = 5/3L$$

(2-8)

where:

t_c = time of concentration, in hours

Runoff Parameters

All storm event hydrograph methods require the input of parameters which describe the physical drainage basin characteristics. These parameters provide the basis from which the runoff hydrograph is developed. This section describes the three key parameters (area, curve number, and time of concentration) used to develop the runoff hydrograph using the SCS UH Method.

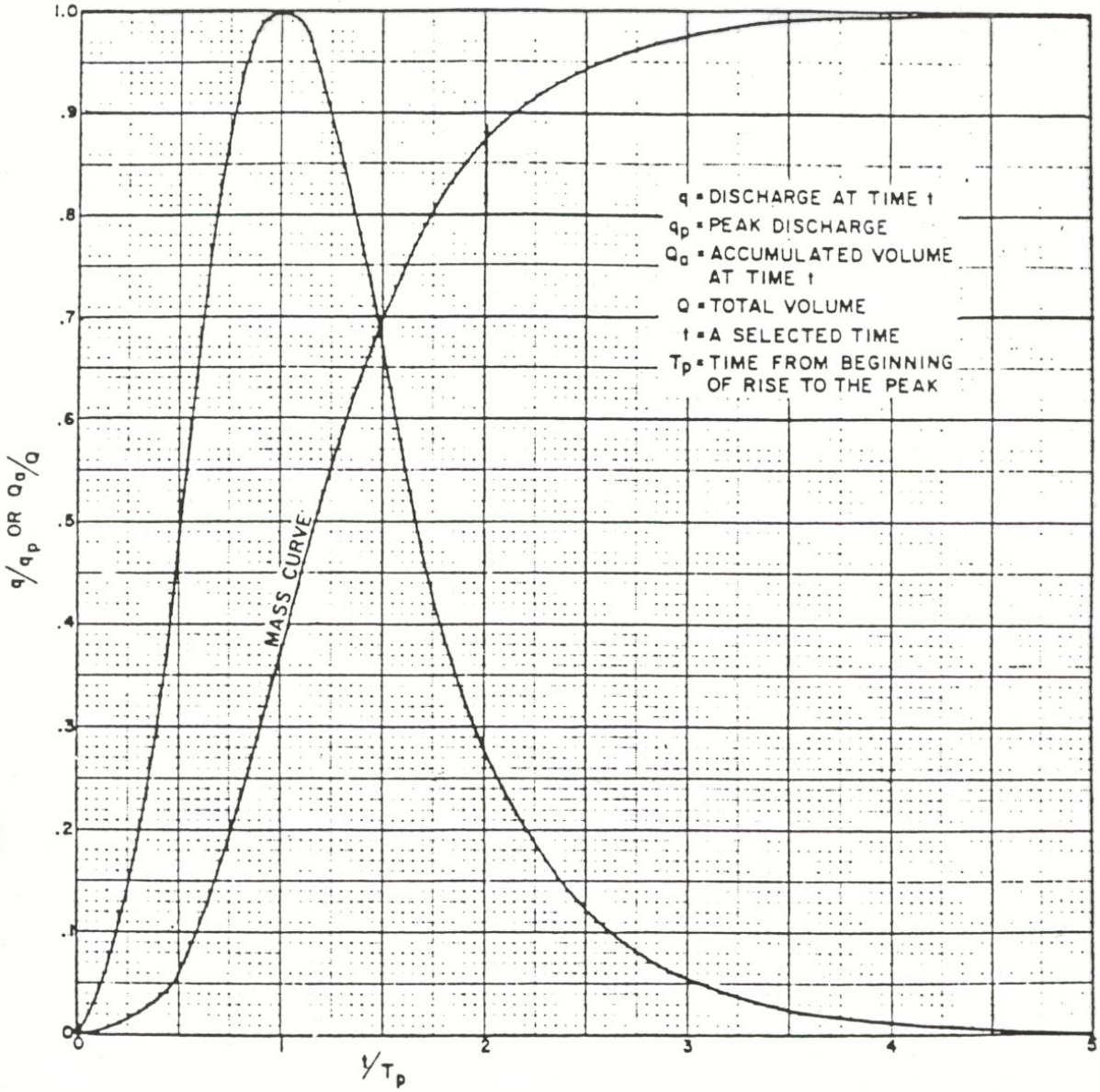

Figure 2-3 Dimensionless Unit Hydrograph and Mass Curve

TABLE 2-9
RATIOS FOR DIMENSIONLESS UNIT HYDROGRAPH AND MASS CURVE

Time Ratios t/t_p	Discharge Ratios q_P	Mass Curve Ratios Q_a/Q
0	0.000	0.000
0.1	0.030	0.001
0.2	0.100	0.006
0.3	0.190	0.012
0.4	0.310	0.035
0.5	0.470	0.065
0.6	0.660	0.107
0.7	0.820	0.163
0.8	0.930	0.228
0.9	0.990	0.300
1.0	1.000	0.375
1.1	0.990	0.450
1.2	0.930	0.522
1.3	0.860	0.589
1.4	0.780	0.650
1.5	0.680	0.700
1.6	0.560	0.751
1.7	0.460	0.790
1.8	0.390	0.822
1.9	0.330	0.849
2.0	0.280	0.871
2.2	0.207	0.908
2.4	0.147	0.934
2.6	0.107	0.953
2.8	0.077	0.967
3.0	0.055	0.977
3.2	0.040	0.984
3.4	0.029	0.989
3.6	0.021	0.993
3.8	0.015	0.995
4.0	0.011	0.997
4.5	0.005	0.999
5.0	0.000	1.000

Source: SCS National Engineering Handbook, Section 5 (1986).

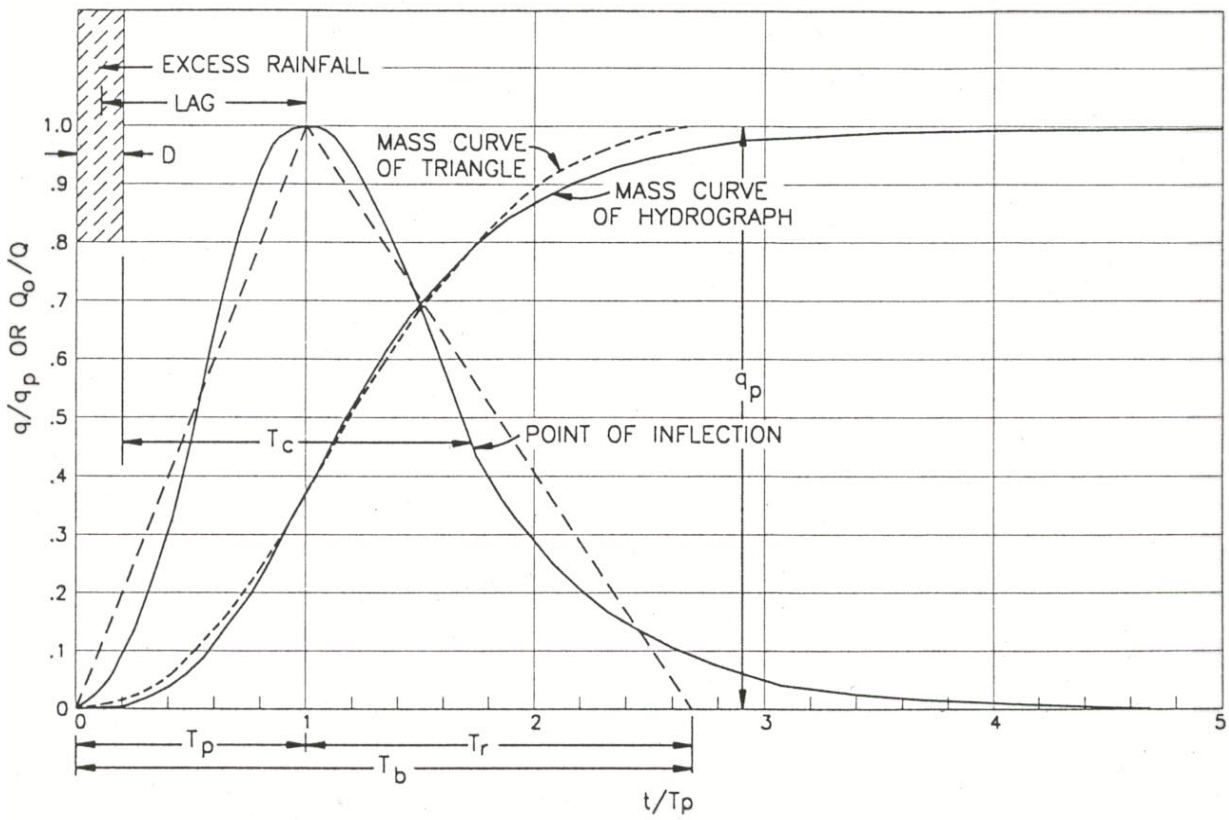

Figure 2-4 Dimensionless Curvilinear Unit Hydrograph and Equivalent Triangular Hydrograph

Area

Obtaining the highest degree of accuracy in hydrograph analysis requires the proper selection of homogeneous basin areas. Significant differences in land use within a given drainage basin must be addressed by dividing the basin area into subbasin areas of similar land use and/or runoff characteristics. For example, a drainage basin consisting of a concentrated residential area and a large forested area should be divided into two subbasin areas accordingly. Hydrographs should then be computed for each subbasin area and summed to form the total runoff hydrograph for the basin. Figure 2-5, on the next page, depicts the summation of UH flows for two excess rainfalls for the 4 hour time mark. This calculation must be made for the whole duration of all UH used.

To further enhance the accuracy of hydrograph analysis, all pervious and impervious areas within a given basin or subbasin should be analyzed separately, unless the impervious area discharges across pervious areas prior to entering the conveyance system. Separate analysis provides better results because there are typically significant differences between precipitation losses attributable to impervious and pervious soil covers; and there is typically a significant difference in travel times across paved areas and defined systems compared to unpaved areas and undefined systems.

This analysis may be done by computing separate hydrographs for each area and combining them to form the total runoff hydrograph. By analyzing pervious and impervious areas separately, the errors associated with averaging these areas are avoided and the true shape of the runoff hydrograph is better approximated.

Impervious areas not connected to a definable drainage system should be combined with the pervious areas. Situations where this may occur include: Roof down spouts draining to infiltration pockets, roof down spouts dispersed over lawn or landscaped areas, parking lots draining to infiltration facilities, and streets without curb and gutter or a definable ditch system.

Curve Number

The SCS method uses an index called the runoff curve number (CN) to represent the combined hydrologic effect of the soil type, land use, hydrologic condition of the soil cover, and the antecedent soil moisture. The CN indicates the runoff potential of soil which is not frozen. Higher CNs reflect a higher runoff potential.

The following conditions and limitations apply when using the SCS CN to estimate runoff:

- Understand that initial abstractions (I_a) include interception, initial infiltration, surface depression storage, and evapotransporation.
- Runoff from frozen ground cannot be estimated using this procedure.
- The CN method becomes less accurate when runoff is less than 0.5 inches. When this situation occurs, use of another procedure is recommended.
- This procedure applies only to direct runoff.

If the weighted CN is less than 30, use of another procedure is recommended.

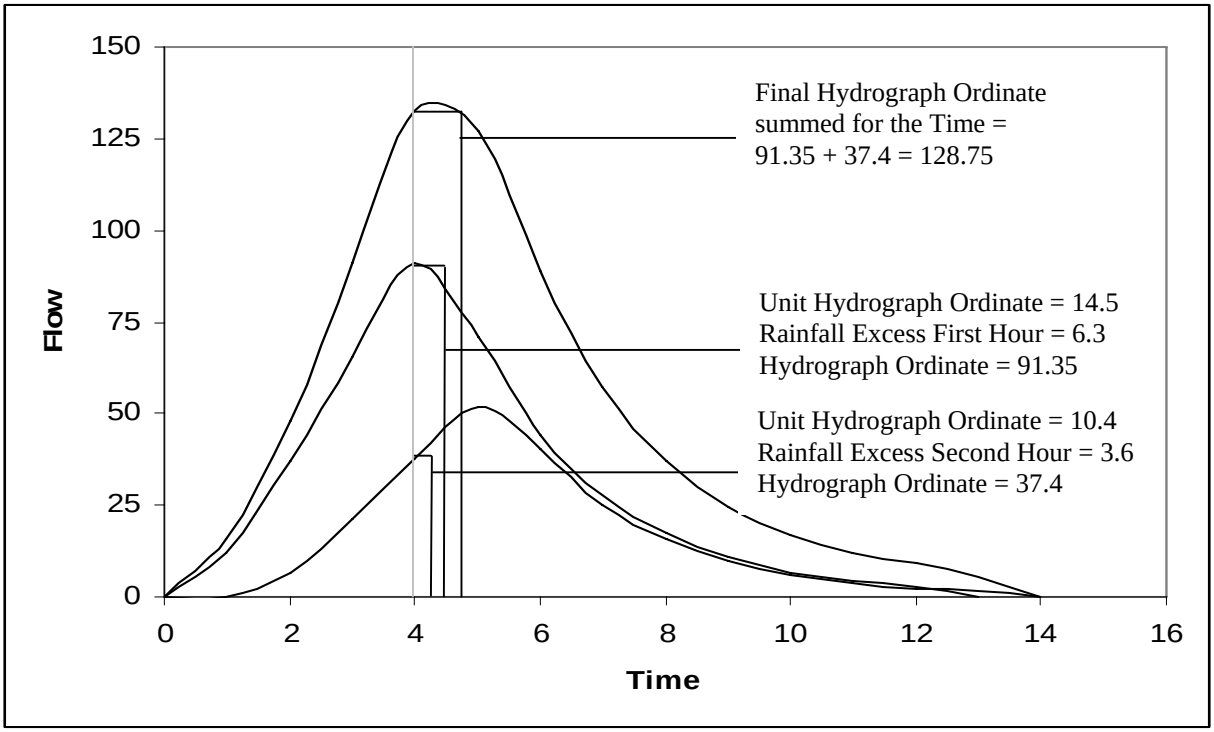

Figure 2-5 Combination of Unit Hydrographs of Varying Rainfall Excess Depths

The SCS soil classification system consists of four Hydrologic Soil Groups (HSG) which are characterized as follows:

HSG A:	Low runoff potential. Deep sand, deep loess, and aggregated silts.
HSG B:	Moderate runoff potential. Shallow loess and sandy loam.
HSG C:	Moderate to high runoff potential. Clay loams, shallow sandy loam, soils low in organic content, and soils usually high in clay.
HSG D:	High runoff potential. Soils that swell significantly when wet, heavy plastic clays and certain saline soils.

The "Soil Survey of Cabarrus County, North Carolina", prepared by the USDA SCS provides a detailed description of the soils in Cabarrus County. This is generally the best means of identifying soil groups.

The SCS cover classification includes three factors: (1) land use, (2) treatment, and (3) hydrologic condition. Identified land uses include: fully developed urban areas, developing areas, and agricultural land. The land uses are subdivided by treatment practices that describe the type of cover (Table 2-10). The hydrologic condition reflects the level of land management which are given as poor, fair, and good. Table 2-11 contains a list of soil types and HSG in the City.

Antecedent moisture conditions have a significant effect on runoff potential (CN). The SCS has developed three antecedent moisture conditions, which are described below:

Condition I: Soils are dry but not to wilting point.

Condition II: Average conditions.

Condition III: Heavy or light rainfall and low temperatures have occurred within the 5 days; saturated soils.

Antecedent moisture condition (AMC) Condition II, represented in Tables 2-10 and 2-11, shall be used in all design calculations unless a different condition is specified by the City.

Curve Number Runoff Equation

The volume of runoff is dependent on the volume of precipitation and the volume of storage available for retention. Table 2.1 from Section 2.1.2 has been reproduced again in this section.

Approximate 24-hour Rainfall Volumes for Concord, NC	
Return Interval	**24-hour Volume (inches)**
1-year	2.9
2-year	3.5
5-year	4.4
10-year	5.1
25-year	6.0
50-year	6.8
100-year	7.6

The runoff equation based on this concept is:

$$Q = \frac{(P - I_a)^2}{(P - I_a) + S} \tag{2-9}$$

where:

Q	=	runoff, in inches
P	=	rainfall, in inches
S	=	potential maximum retention after runoff begins, in inches
I_a	=	initial abstraction, in inches

Initial abstraction (I_a) includes all losses before runoff begins. These losses include interception, initial infiltration, surface depression storage, and evapotransporation,. Initial abstraction is based on the following empirical relationship that shall be used for all design calculations unless otherwise directed by the City.

$$I_a = 0.2S \tag{2-10}$$

Substituting $I_a = 0.2S$ into Equation 2-9:

$$Q = \frac{(P - 0.2S)^2}{P + 0.8S} \tag{2-11}$$

Potential maximum retention (S) is related to the soil and cover conditions of the watershed through the CN:

$$S = \frac{1000}{CN} - 10 \tag{2-12}$$

The precipitation excess for a storm can also be obtained using the graphical solution shown on Figure 2-6. For example, a precipitation of 5 inches with a curve number of 80 generates 2.9 inches of runoff.

TABLE 2-10
RUNOFF CURVE NUMBER FOR URBAN AREAS AND OTHER AGRICULTURAL LANDS[1]

Cover Description Cover Type and Hydrologic Condition	Average Percent Impervious Area[2]	Curve Numbers for Hydrologic Soil Group			
		A	B	C	D
Fully developed urban areas (vegetation established)					
Open space (lawns, parks, golf courses, cemeteries, etc.)[3]					
Poor Condition (grass cover <50 percent)		68	79	86	89
Fair Condition (grass cover 50 to 75 percent)		49	69	79	84
Good Condition (grass cover >75 percent)		39	61	74	80
Impervious areas:					
Paved parking lots, roofs, driveways, etc., (excluding right-of-ways)		98	98	98	98
Streets and roads:					
Paved; curbs and storm sewers (excluding right-of-ways)		98	98	98	98
Paved; open ditches (including right-of-ways)		83	89	92	93
Gravel (including right-of-ways)		76	85	89	91
Dirt (including right-of-ways)		72	82	87	89
Urban districts:					
Commercial and business	85	89	92	94	95
Industrialf	72	81	88	91	93
Residential districts by average lot size:					
RE - maximum of 1 dwelling per acre	20	51	68	79	84
RL - maximum of 2 dwellings per acre	25	54	70	80	85
RM-1 - maximum of 3 dwellings per acre	30	57	72	81	86
RM-2 - maximum of 4 dwellings per acre	38	61	75	83	87
RV - maximum of 8 dwelling/acre	65	77	85	90	92
RC - maximum of 15 dwelling/acre	80	86	90	93	96
Developing urban areas and agricultural land					
Newly graded areas (pervious areas only, no vegetation)[4]		77	86	91	94
Pasture, grassland, or range – continuous forage for grazing[5]	Poor	68	79	86	89
	Fair	49	69	79	84
	Good	39	61	74	80
Meadow-continuous grass, protected from grazing and generally mowed for hay	-	30	58	71	78
Brush-brush, weed, grass mixture with brush the major elements[6]	Poor	48	67	77	83
	Fair	35	56	70	77
	Good	[7]30	48	65	73
Woods-grass combination (orchard or tree farm)[8]	Poor	57	73	82	86
	Fair	43	65	76	82
	Good	32	58	72	79
Woods[9]	Poor	45	66	77	83
	Fair	36	60	73	79
	Good	[4]30	55	70	77
Farmsteads-buildings, lanes, driveways, and surrounding lots.	-	59	74	82	86

Source: SCS, Urban Hydrology for Small Watersheds, Technical Release No. 55.

Notes for Table 2-10

[1] Average runoff condition, and $I_a = 0.2S$.

[2] The average percent impervious area shown was used to develop the composite CNs. Other assumptions are as follows: Impervious areas are directly connected to the drainage system, impervious areas have a CN of 98, and pervious areas are considered equivalent to open space in good hydrologic condition. CNs for other combinations of conditions may be computed by using Figures 2-7 or 2-8 located in this Article.

[3] CNs shown are equivalent to those of pasture. Composite CNs may be computed for other combinations of open space cover type.

[4] Composite CNs to use for the design of temporary measures during grading and construction should be computed using Figures 2-7 or 2-8, located in this Article based on the degrees of development (impervious area percentage) and the CNs for the newly graded pervious area.

[5] Poor: <50 percent ground cover or heavily grazed with no mulch.
Fair: 50 to 75 percent ground cover and not heavily grazed.
Good: >75 percent ground cover and lightly or only occasionally grazed.

[6] Poor: <50 percent ground cover
Fair: 50 to 75 percent ground cover
Good: >75 percent ground cover

[7] Actual curve number is less than 30; use CN = 30 for runoff computations.

[8] CNs shown was computed for areas with 50 percent woods and 50 percent grass (pasture) cover. Other combinations of conditions may be computed from the CNs for woods and pastures.

[9] Poor: Forest litter, small trees, and brush are destroyed by heavy grazing or regular burning.
Fair: Woods are grazed but not burned, and some forest litter covers the soil.
Good: Woods are protected from grazing, and litter and brush adequately cover the soil.

TABLE 2-11
SOIL TYPES IN CONCORD, NC

Soil Name	Symbol	HSG*
Altavista	AaB	C
Appling	ApB	B
Armenia	Ar	D
Badin	Ba	C
Cecil	Cc	B
Cecil-Urban complex	Ce	B
Chewacla	Ch	C
Cullen	Cu	C
Coronaca	Co	B
Enon	En	C
Enon-Urban complex	Eo	C
Georgeville	Ge	B
Goldston	Go	C
Hiwassee	Hw	B
Iredell	Id	C/D
Mecklenburg	Me	C
Mecklenburg-Urban complex	Mk	C
Misenheimer	Ms	C
Pacolet	Pa	B
Pacolet-Udorthents complex	Pc	B
Poindexter	Po	B
Sedgefield	Sf	C
Udorthents	Ud	-
Urban land	Ur	-
Vance	Va	C
Wehadkee	We	D

*SCS Hydrologic Soil Group

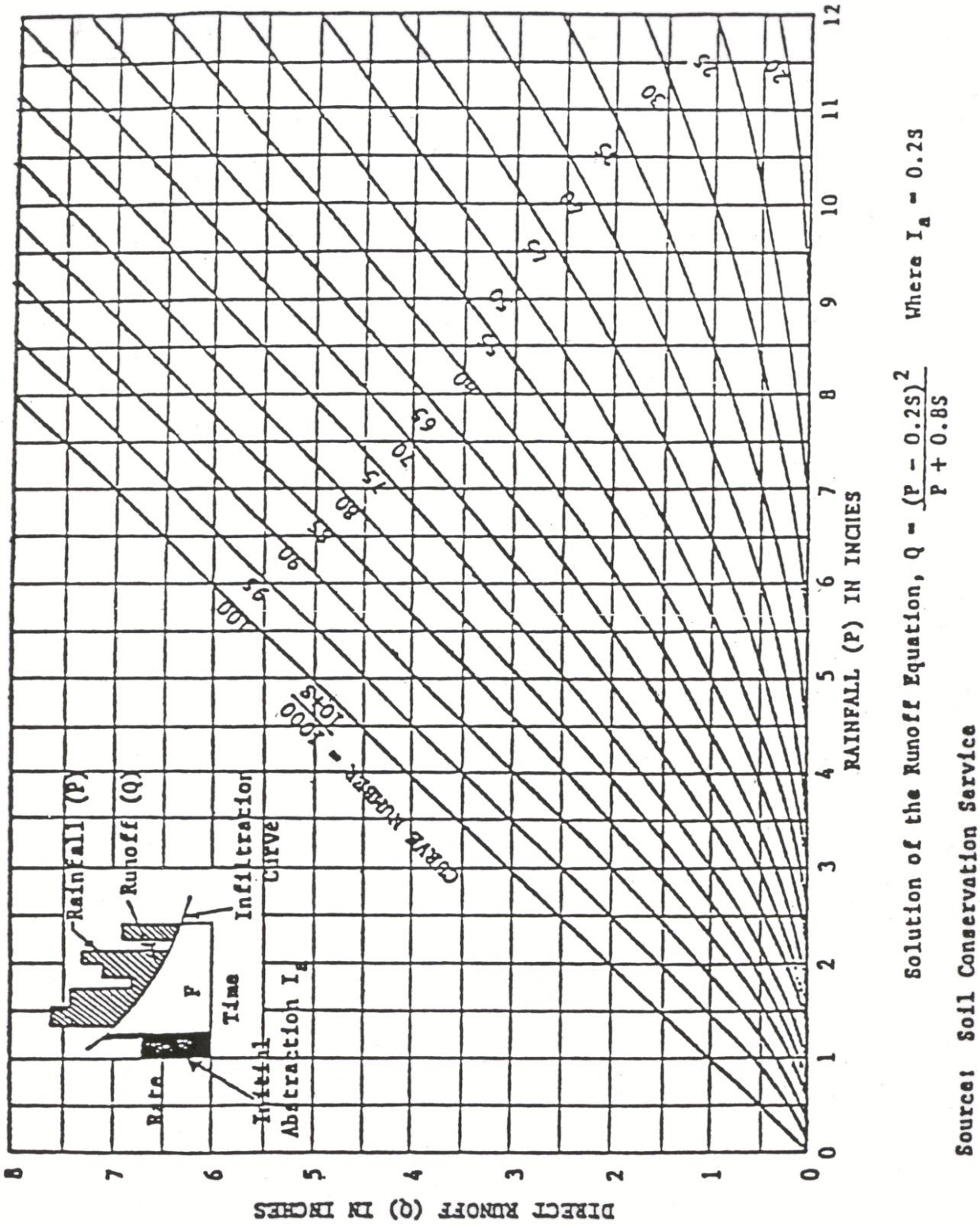

Solution of the Runoff Equation, $Q = \frac{(P - 0.2S)^2}{P + 0.8S}$ Where $I_a = 0.2S$

Source: Soil Conservation Service

Figure 2-6 SCS Solution of the Runoff Equation

Example 2: **This example illustrates the procedure to use for computing a composite curve number and determining runoff for a basin with mixed land uses.**

Given: 300-acre basin.
70 percent of the basin is an Enon soil, Hydrologic Soil Group C.
30 percent of the watershed is a Cecil soil, Hydrologic Soil Group B.

200 acres of the watershed, including all HSG B soils and 100 acres of the HSG C soil is 1/2-acre residential lots. The residential lots have directly connected impervious areas of 25 percent and the pervious area is considered in good hydrologic soil condition.

Remaining area is open space and in good hydrologic condition.

Find: Determine the weighted CN for this basin and the volume of runoff from the 25-year 24-hour storm event.

Solution:

1. The 25-year 24-hour precipitation for the Concord area is 6.0 inches (Table 2-1).

2. Following the procedure outlined in the worksheet on the following page, the weighted CN for the basin can be determined and the volume of runoff can be calculated.

Example 2:

1. Runoff CN

Soil Name	Hydrologic Group	Cover Description	Curve Number[1]			Area (acres)	Product of CN*Area
			Table 2-10	Figure 2-7	Figure 2-8		
Cecil	B	1/2 acre residential, 25 percent impervious, Good condition	70			90	6300
Enon	C	1/2 acre residential, 25 percent impervious, Good condition	80			100	8000
Enon	C	Open space, Good condition	74			110	8140
					Totals	300	22440

[1] Use only one CN source per line

$$CN_{weighted} = \frac{\sum (CN \times Area)}{\sum Area}$$

$$CN_{weighted} = \frac{22{,}440_{acres}}{300_{acres}} = 74.8 \qquad \text{Use CN = 75}$$

2. Runoff

Storm #1		
Frequency	25	year
Rainfall, P (24-hour)	6.0	inches
Runoff, Q	3.3	inches

(Use P and CN with Figure 2-6 and Eqns 2-11 and 2-12)

Example 3: **Example 3 is the same as Example 2, except the directly connected impervious area for the 1/2-acre residential lots differs from that presented in Table 2-10.**

Given: The 1/2-acre residential lots directly connected impervious areas are 35 percent, which differs from what is presented in Table 2-10.

Solution: Use Figure 2-7 to obtain a representative CN for the 1/2-acre residential lots. Using footnote 2 in Table 2-10, enter Figure 2-7 using CN = 61 for HSG B and CN - 74 for HSC C and obtain CN of 74 and 82, respectively.

Example 3:

1. Runoff CN

Soil Name	Hydrologic Group	Cover Description	Curve Number[1]			Area (acres)	Product of CN*Area
			Table 2-10	Figure 2-7	Figure 2-8		
Cecil	B	1/2 acre residential, 35 percent impervious, Good condition		74		90	6660
Enon	C	1/2 acre residential, 35 percent impervious, Good condition		82		100	8200
Enon	C	Open space, Good condition	74			110	8140
					Totals	300	23000

[1] Use only one CN source per line

$$CN_{weighted} = \frac{23{,}000_{acres}}{300_{acres}} = 76.7 \qquad \text{Use CN = 77}$$

2. Runoff

Storm #1		
Frequency	25	year
Rainfall, P (24-hour)	6.0	inches
Runoff, Q	3.5	inches

(Use P and CN with Figure 2-6 and Eqns 2-11 and 2-12)

Example 4: Example 4 is the same as Example 2, except 50 percent of the impervious area is not directly connected for the 1/2-acre residential lots.

Solution: Use Figure 2-8, on page 2-33, to determine the representative CN for the 1/2-acre residential lots. This adjustment to impervious area generates a representative CN of 78.

Example 4:

1. Runoff CN

Soil Name	Hydrologic Group	Cover Description	Curve Number[1]			Area (acres)	Product of CN*Area
			Table 2-10	Figure 2-7	Figure 2-8		
Cecil	B	1/2 acre residential, 25 percent impervious, 50 percent connected impervious, Good condition	70			90	6300
Enon	C	1/2 acre residential, 25 percent impervious, 50 percent unconnected impervious, Good condition			78	100	7800
Enon	C	Open space, Good condition	74			110	8140
					Totals	300	22240

[1] Use only one CN source per line

$$CN_{weighted} = \frac{22{,}400_{acres}}{300_{acres}} = 74.7 \qquad \text{Use CN = 75}$$

2. Runoff

Storm #1		
Frequency	25	year
Rainfall, P (24-hour)	6.0	inches
Runoff, Q	3.3	inches

(Use P and CN with Figure 2-6 and Eqns 2-11 and 2-12)

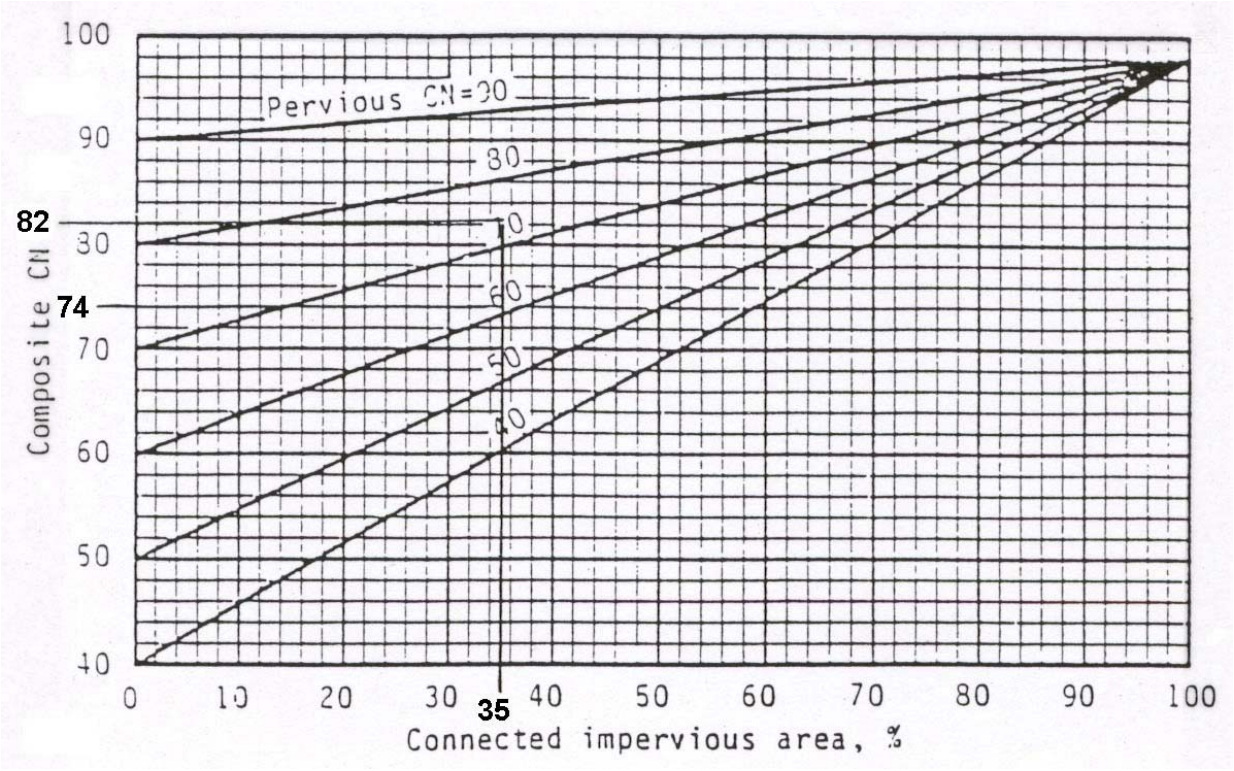

Figure 2-7 Composite Curve Number with Connected Impervious Areas

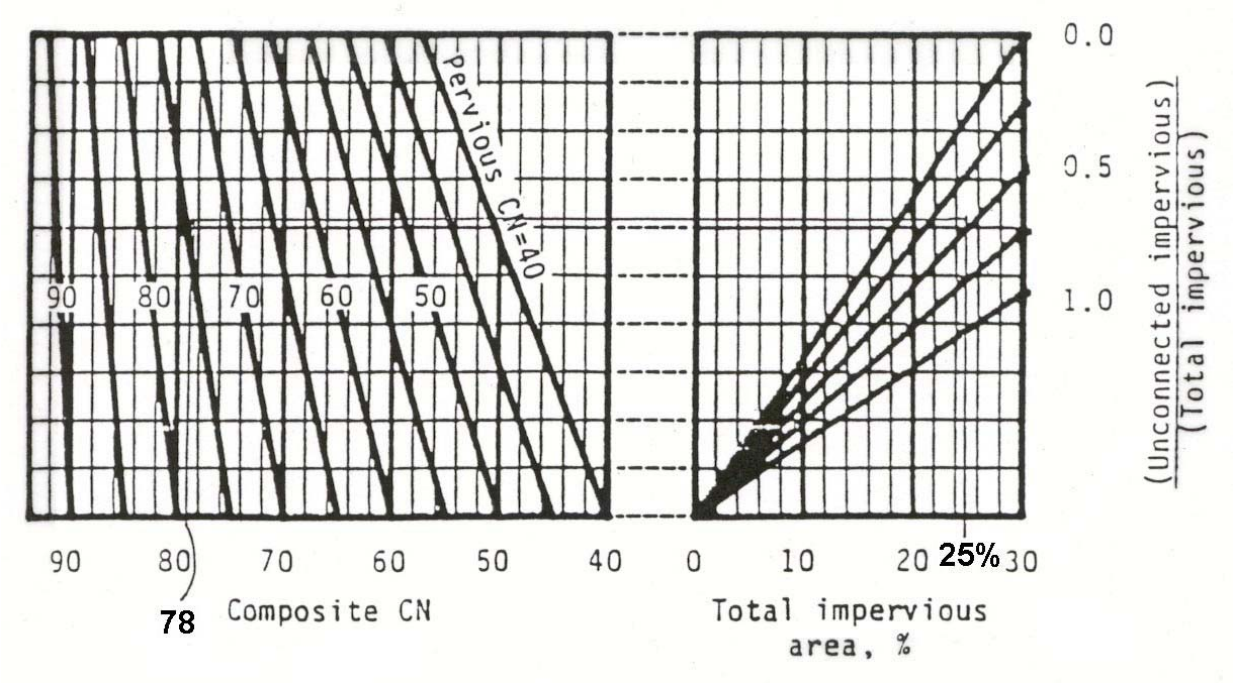

Figure 2-8 Composite Curve Number with Unconnected Impervious Areas and Total Impervious Area less than 30 percent

Travel Time and Time of Concentration

Travel time (T_t) is defined as the time it takes for water to travel from one location to another location within the watershed. Time of concentration (T_c) is defined as the time required for water to travel from the hydraulically most distant point in the watershed to the point of design. This method assumes that time of concentration can include travel components of overland flow (sheet flow), flow through shallow swales and gutters, and channel flow.

Limitations for time of concentration include overland flow not exceeding 300 feet for urban areas and 1,000 feet for rural areas and a minimum T_c of 0.1 hour.

Computation of Travel Time and Time of Concentration

Travel time and time of concentration are computed using the procedure presented in SCS TR55. This procedure determines the average velocity for each travel component which is converted to a travel time using the following equation:

$$T_t = \frac{L}{3600V} \tag{2-13}$$

where:

T_t	=	travel time, in hours
L	=	flow length, in feet
V	=	average velocity, in feet per second
3600	=	conversion factor from seconds to hours

Time of Concentration (T_c):

$$T_c = T_{t\,\text{sheet flow}} + T_{t\,\text{shallow concentrated flow}} + T_{t\,\text{open channel flow}} + \ldots T_{tm} \tag{2-14}$$

where:

T_c	=	time of concentration, in hours
T_{tm}	=	number of travel time components

Sheet flow

Sheet flow represents flow of runoff over plane surfaces. The procedure used is Manning's Kinematic solution to determine travel time. This equation is identical to Equation 2-4 for the Rational Equation except the time is set in hours rather than minutes. Sheet flow continues to be limited to less than 300 feet for urban areas and 1,000 feet for rural areas.

The following assumptions apply when using this equation to calculate overland flow: 1) shallow steady uniform flow, 2) constant intensity of rainfall excess, 3) a rainfall duration of 24 hours and a storm frequency of 2 years, and 4) a minor effect of infiltration on travel time.

$$T_t = \frac{0.007(nL)^{0.8}}{P_2^{\,0.5} s^{0.4}} \tag{2-15}$$

where:

T_t	=	travel time, in hours
n	=	Manning's roughness coefficient, refer to Table 2-7
L	=	flow length, in feet
P_2	=	2-year, 24-hour rainfall, in inches, refer to Table 2-1
s	=	slope of hydraulic grade line (land slope), in feet per foot

Shallow Concentrated Flow

This method assumes that, after a maximum travel distance, sheet flow becomes shallow concentrated flow. Average velocity of shallow concentrated flow for both paved and unpaved surfaces is determined from Figure 2-9, on page 2-36. Shallow concentrated flow over paved surfaces is representative of gutter flow.

Channel Flow

This procedure assumes that open channel flow begins where channels are visible either from aerial photos that identify a channel or through field observations. Manning's equation is used to calculate velocity in the channels. This approach assumes that the channel is flowing bank full. Manning's equation is:

$$V = \frac{1.49 r^{2/3} s^{1/2}}{n} \tag{2-16}$$

where:

V	=	average velocity, in feet per second
r	=	hydraulic radius feet = area divided by wetted perimeter
s	=	slope of the hydraulic grade line (channel slope), in feet per foot
n	=	Manning's roughness coefficient for open channel flow
A	=	area of flow, in square feet
WP	=	perimeter of channel that is wet by water, in feet

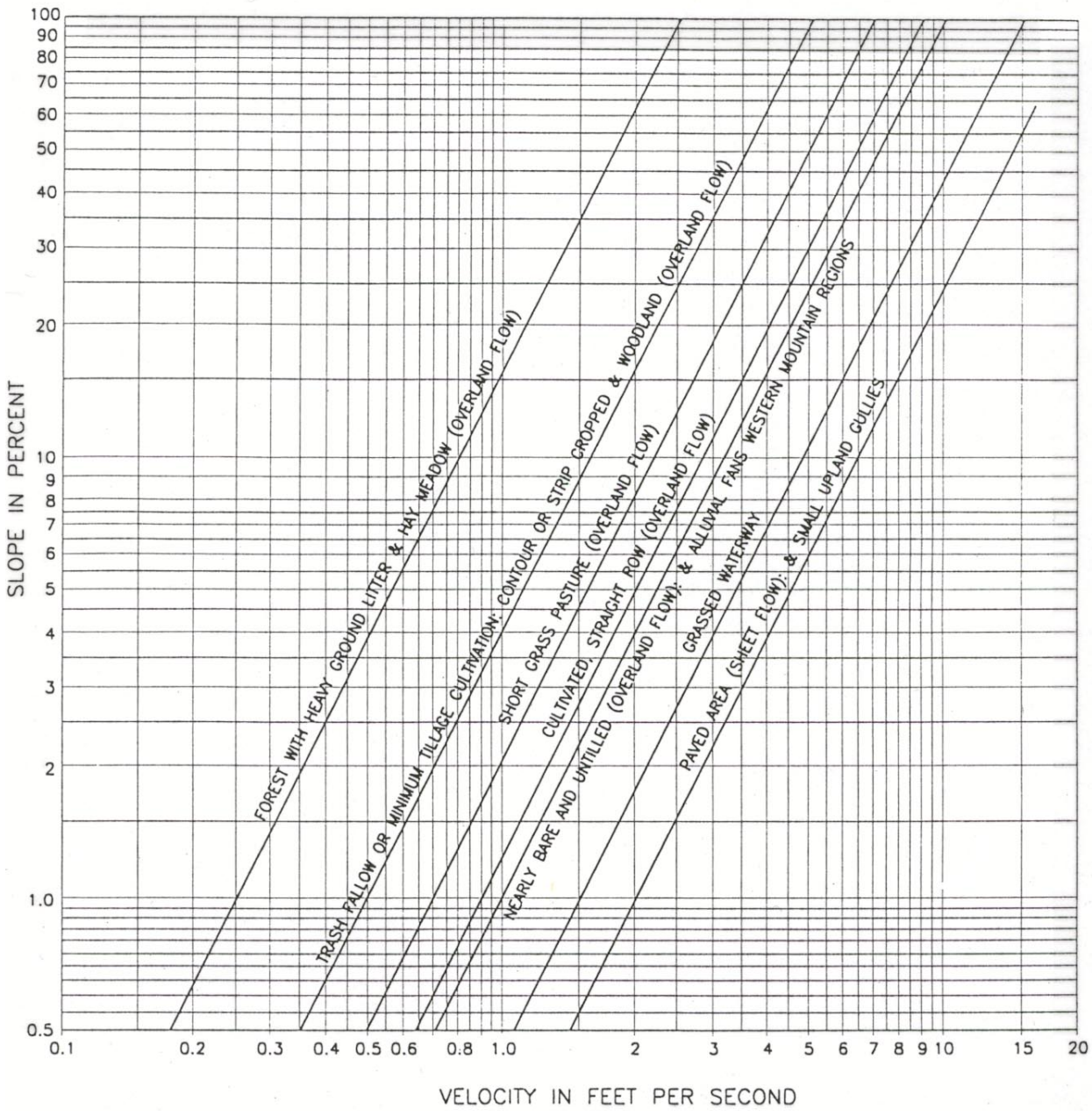

Figure 2-9 Average Velocities for Estimating Travel Time for Shallow Concentrated Flow

Example 5: Compute travel time and time of concentration using the SCS TR55 Methodology. Includes an overland flow component, shallow concentrated flow component, and an open channel flow component.

Find: Determine the time of concentration at Point D.

Schematic:

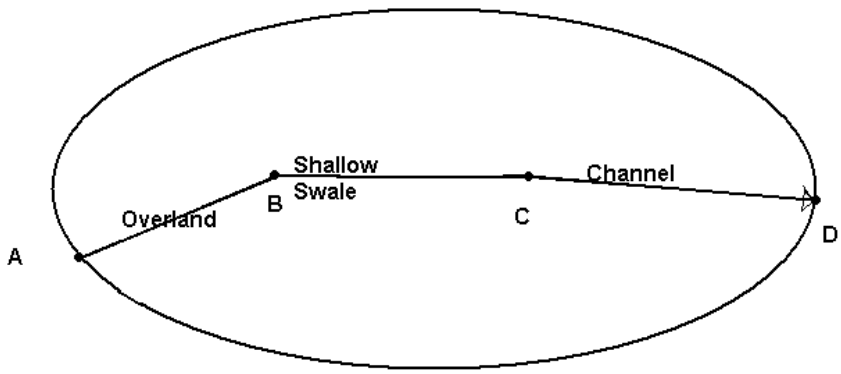

Given:

<u>Segment</u>

A - B	sheet flow dense grass length (L) = 250 feet slope (s) = 0.005 feet per foot
B - C	shallow concentrated flow unpaved (local swale) length (L) = 800 feet slope (s) = 0.015 feet per foot
C - D	channel flow 4 foot base, 2 feet in depth, and 2:1 sideslopes length (L) = 2,000 feet slope (s) = 0.004 feet per foot Manning's roughness (n) = 0.05

Solution: The travel time for each flow component is computed and their summation represents the time of concentration to Point D.

Example 5:

Present Area

Sheet flow	Segment	A-B	
Surface description		Dense grass	
Manning's roughness coefficient, n		0.24	(Table 2-7)
Flow length, L (<300 feet)		250	feet
Two-year, 24-hour rainfall, P_2		3.5	in (Table 2-1)
Land slope, s		0.005	feet per foot
$T_t = \frac{0.007(nL)^{0.8}}{P_2^{0.5} s^{0.4}}$		$T_t =$ 0.82	hour

Shallow Concentrated flow	Segment	B-C	
Surface description		unpaved	
Flow length, L		800	feet
Watercourse slope, s		0.015	feet per foot
Average velocity, V		2.0	feet per second (Figure 2-9)
$T_t = \frac{L}{3600V}$		$T_t =$ 0.11	hour

Channel flow	Segment	C-D	(assumed full bank flow)
Cross-sectional flow area, a		16	$feet^2$
Wetted perimeter, p_w		12.94	feet
Hydraulic radius, r		1.24	feet
Channel slope, s		0.004	feet per foot
Manning's roughness coefficient, n		0.05	
$V = \frac{1.49 r^{2/3} s^{1/2}}{n}$		2.17	feet per second
Flow length, L		2000	feet
$T_t = \frac{L}{3600V}$		$T_t =$ 0.26	hour
Watershed $T_c = \sum T_t$		$T_c =$ 1.19	hour

Use T_c of 1.2 hours

SECTION 3
STREET DRAINAGE

Page

LIST OF TABLES

FIGURE

3.1 INTRODUCTION

Roadways or streets in the City of Concord (City) serve an important and necessary drainage service even though their primary function is the movement of traffic. However, good planning of streets can substantially help in reducing the size, and sometimes reducing the extent, of a storm drainage system in newly urbanized areas. Traffic and drainage uses are compatible up to a point, beyond which drainage must be secondary to traffic needs.

3.2 DESIGN CRITERIA

Design criteria for the collection and transport of runoff on public streets are based on a reasonable frequency of traffic interference. That is, depending on the street classification, certain traffic lanes can be fully or partially inundated during the design storm return period. Higher frequency storms which occur more often will produce less runoff and will not inundate the entire street.

Planning and design for urban storm runoff must be considered from the viewpoint of both the minor and major storm occurrences. The objective of major storm runoff planning and design is to eliminate major damage and loss of life. The minor storm drainage system is necessary to eliminate inconvenience and high street maintenance costs, and reduce frequently recurring minor damage. Table 3-1 outlines the design criteria for the minor and major storm.

TABLE 3-1
DESIGN CRITERIA FOR STREET DRAINAGE

Minor Storm	Major Storm
4 inches/hour rainfall intensity	100-year storm

3.2.1 Street Capacity for Minor Storm

Determination of street capacity for the minor storm shall be based upon pavement encroachment or spread, the commonly referred terminology. The pavement encroachment for the design storm shall be limited as set forth in Section 1.3 Design Policy and summarized on the next page in Tables 3-2 and 3-3. When the maximum encroachment or cross street flow depth is reached, a separate storm drainage system, additional inlets, or additional storm drainage capacity shall be provided and designed on the basis of the minor storm. Table 3-2 outlines the minor storm criteria for allowable street use for encroachment.

TABLE 3-2 MINOR STORM RUNOFF ALLOWABLE STREET USE	
Street Classification	**Maximum Pavement Encroachment**
Alley and Local Street	Flow may spread to crown of street. Velocities may not exceed 8 feet per second. No curb overtopping.
Collector	Flow spread must leave at least one half of a travel lane in each direction free of water. Velocities may not exceed 8 feet per second. No curb overtopping.
Thoroughfare	Flow spread must leave at least one lane in each direction free of water. Velocities may not exceed 8 feet per second. No curb overtopping.
Freeway	No encroachment is allowed on any travel lanes.

Cross flows, those flows that pass over the crown of a street, also need to be regulated for traffic interference and public safety concern. Table 3-3 outlines the minor storm criteria for cross flows.

TABLE 3-3 MINOR STORM RUNOFF ALLOWABLE CROSS STREET FLOW	
Street Classification	**Maximum Cross Flow Depth**
Alley and Local Street	None
Collector	None
Thoroughfare	None
Freeway	None

Calculating Gutter Capacity

There are a variety of gutter sections available for use in street drainage today. The geometry of these gutters may be determined by the need for additional carrying capacity or the ability for safe passage of pedestrian traffic. The gutter may have a straight transverse slope, a composite transverse slope, or transverse slopes composed of two straight lines (V-shape). When the allowable encroachment has been determined, the gutter (that portion of the street used to convey runoff) capacity can be computed using a modified version of Manning's formula.

A straight transverse slope section or standard gutter usually resembles a triangular shape with the curb forming the vertical leg of the triangle. For standard gutters with identical cross slopes for the street and gutter, a modified version of the Manning’s equation has been developed. Manning's equation is modified to better describe the hydraulic radius of a gutter section. The equation in terms of cross slope and width of flow at the curb is:

$$Q = \left[\frac{0.56}{n}\right] S_x^{1.67} s^{0.5} T^{2.67} \tag{3-1}$$

where:

Q	=	discharge, in cubic feet per second
n	=	Manning's roughness coefficient
S_x	=	cross slope of the street, in feet per foot
s	=	longitudinal slope, in feet per foot
T	=	width of flow (spread), in feet

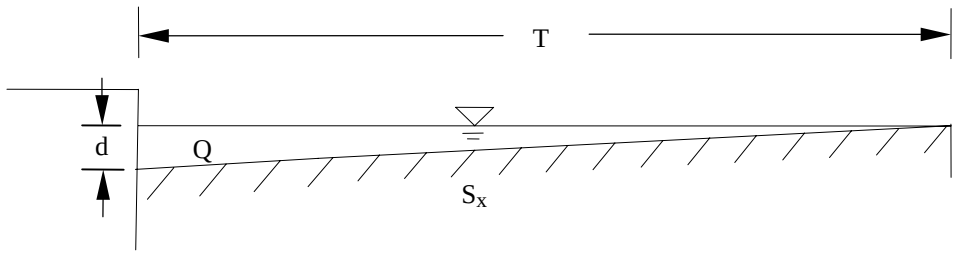

The resistance of the curb face is neglected in the equation since the resistance is negligible when the cross slope is 10 percent or less.

The depth of flow in a standard gutter can be calculated by the following equation.

$$d = TS_x \tag{3-2}$$

where:

d	=	depth of flow at curb or deepest point, in feet
T	=	width of flow (spread), in feet
S_x	=	cross slope of the street, in feet per foot

Manning's "n" values for different street and gutter roughness conditions are presented in Table 3-4, on the next page.

To increase the capacity of a gutter, the gutter cross slope may be steepened with respect to the cross slope of the street. These gutters are termed composite gutters. For composite gutters, the capacity is determined for the depressed section and the area above the depressed section separately. The following series of equations demonstrates the calculations required for determining the capacity for these types of gutters.

$$Q = Q_s + Q_w \tag{3-3}$$

where:

Q	=	discharge, in cubic feet per second
Q_s	=	discharge in section above discharge, in cubic feet per second
Q_w	=	discharge in depressed section, in cubic feet per second

TABLE 3-4
MANNING'S ROUGHNESS COEFFICIENTS FOR STREETS AND GUTTERS

Surface Type	"n" Value
Concrete gutter troweled finish	0.012
Asphalt pavement:	
Smooth texture	0.013
Rough texture	0.016
Concrete gutter with asphalt pavement:	
Smooth	0.013
Rough	0.015
Concrete pavement:	
Float finish	0.014
Broom finish	0.016
Brick	0.016

Equation 3-3, above, has been simplified to the following equation in terms of cross slopes and widths based on the relationship of frontal flow (gutter section) to side flow (street section).

$$Q = \frac{Q_s}{1 - E_0} \tag{3-4}$$

where:

$$E_0 = \frac{1}{1 + \dfrac{S_w/S_x}{\left[1 + \dfrac{S_w/S_x}{(T/W) - 1}\right]^{2.67} - 1}} \tag{3-5}$$

S_w	=	cross slope of depressed section, in feet per foot
S_x	=	cross slope of street, in feet per foot
W	=	width of depressed section, feet
T	=	width of flow (spread), in feet

If the cross slope of the depressed section is not known or provided it may be calculated from the following equation.

$$S_w = S_x + \frac{a}{W} \tag{3-6}$$

Flow depth at the curb can be calculated from the following equation using the spread, cross slope of the street, and depth of the depressed section.

$$d = a + TS_x \tag{3-7}$$

Gutters with transverse slopes composed of two straight lines (V-shape) are commonly referred to as valley gutters. The valley may also be composed of a smooth parabolic cross section. The smooth parabolic gutters are commonly referred to as roll back or mountable types. The capacity for all valley type gutters is approximated by the same methodology. For valley gutters, an adjusted cross slope of the gutter section is calculated by the following equation.

$$S_a = \frac{S_{x1}S_{x2}}{S_{x1} + S_{x2}} \tag{3-8}$$

where:

S_a	=	adjusted cross slope, in feet per foot
S_{x1}	=	cross slope of interior gutter side, in feet per foot
S_{x2}	=	cross slope of exterior gutter side, in feet per foot

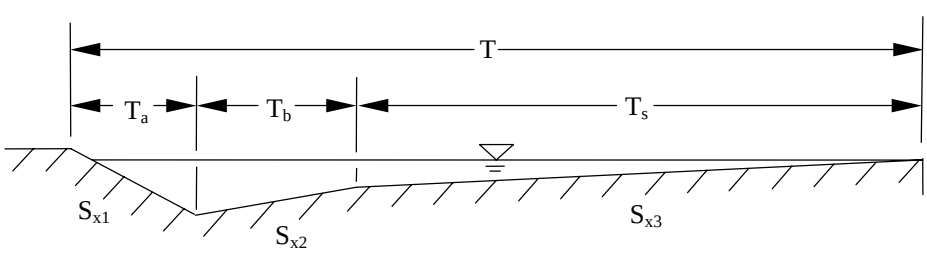

Use Equation 3-1 and the adjusted cross slope from Equation 3-8 as S_w to determine the capacity of the valley gutter. If it is necessary to determine the spread associated with a given flow capacity, use Equations 3-1 and 3-8 to calculate a preliminary spread, T', first. If T' is less than T_a+T_b, then T is equal to T' and the spread is being conveyed only in the valley gutter section. If T' is greater than T_a+T_b, then part of the spread is also being conveyed in the street section. To determine the final spread, T, that is also being partially conveyed in the street, requires an assumption of T' and iteration between Equations 3-1 and 3-8 until T' converges. This process is documented in Example 2.

Calculating Velocity In Gutter

The average velocity of flow in the gutter can be calculated by modifying Manning's Equation. Equation 3-9 can be used to approximate velocity in standard gutter sections. The equation in terms of cross slope and width of flow in the pavement assumes that the discharge in the gutter varies uniformly between the sections and is:

$$V = \frac{1.12}{n} s^{0.5} S_x^{0.67} T^{0.67} \qquad (3\text{-}9)$$

where:

V	=	velocity, in feet per second
s	=	longitudinal slope, in feet per foot
S_x	=	cross slope, in feet per foot
T	=	width of flow (spread), in feet
n	=	Manning's roughness coefficient

If a channel has zero flow at the upstream end, the average velocity occurs at the point where spread is equal to 65 percent of the maximum spread. For channel sections with discharges greater than zero at the upstream section, the spread at average velocity, T_a, is given by Table 3-5, on the next page. In Table 3-5, T_1 is the spread at the upstream section and T_2 is the spread at the downstream section. The average spread is then used in Equation 3-8.

TABLE 3-5 SPREAD AT AVERAGE VELOCITY IN A TRIANGULAR GUTTER SECTION	
$\frac{T_1}{T_2}$	$\frac{T_a}{T_2}$
0.0	0.65
0.1	0.66
0.2	0.68
0.3	0.70
0.4	0.74
0.5	0.77
0.6	0.82
0.7	0.86
0.8	0.90

Average velocity calculations for other cross sections are best determined by software packages. The Federal Highway Administration's HY-22 and Visual Urban (HY-22 for Windows) are free, downloadable software packages that perform this and other calculations from this Section.

Example 1: Gutter Carrying Capacity

Given: 6-inch vertical curb
2-feet-wide by 0.1-feet-deep gutter
2 percent pavement crown slope
Residential collector without on-street parking (24-foot pavement width)
1 percent longitudinal street grade
Assume n = 0.016

Find: Capacity in gutter for minor storm

Solution:

1) Determine allowable pavement encroachment.

From Table 3-2, a collector street has an allowable encroachment of half a travel lane in a single direction. Therefore, encroachment may spread to a width of 8 feet. Half of one travel lane in a single direction is 6 feet wide plus the 2 feet provided by the gutter section.

2) Calculate capacity for the gutter.

The gutter is a composite gutter where the capacity for the depressed section and street section will be determined separately.

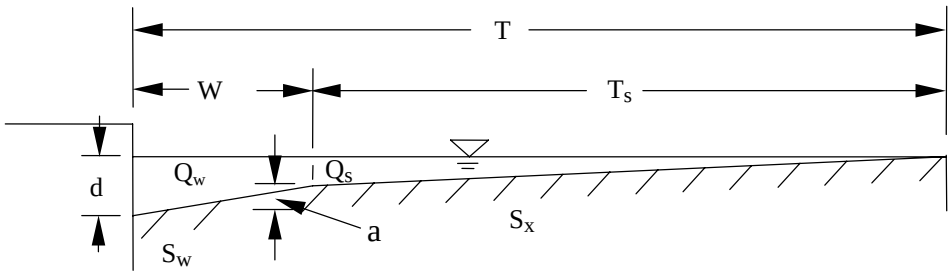

T = 8 feet	d = 0.5 feet	s = 0.01 feet per foot
T_s = 6 feet	a = 0.1 feet	S_x = 0.02 feet per foot
W = 2 feet		

Calculate the total capacity, Q, with Equation 3-4 which sums the capacity of both the street and gutter. The capacity of the street section is determined by Equation 3-1. The capacity of the depressed gutter section is determined by Equation 3-5 but the gutter slope, S_w, must be calculated from Equation 3-6 since it is not known.

a) Find Q_s: Substitute T_s for T in Equation 3-1 and solve for Q.

$$Q = \left[\frac{0.56}{n}\right] S_x^{1.67} s^{0.5} T^{2.67}$$

$$Q_s = \left[\frac{0.56}{0.016}\right] (0.02\ \textit{feet per foot})^{1.67} (0.01\ \textit{feet per foot})^{0.5} (6\ \textit{feet})^{2.67}$$

$$Q_s = 0.61\ \textit{cubic feet per second}$$

b) Find S_w: Solve Equation 3-6 for S_w.

$$S_w = S_x + \frac{a}{W}$$

$$S_w = 0.02\ \textit{feet per foot} + \frac{0.1\ \textit{feet}}{2\ \textit{feet}}$$

$$S_w = 0.07 \text{ feet per foot}$$

c) Find E_0: Solve Equation 3-5 for E_0.

$$E_0 = \frac{1}{1 + \dfrac{S_w / S_x}{\left[1 + \dfrac{S_w / S_x}{(T/W) - 1}\right]^{2.67} - 1}}$$

$$E_0 = \frac{1}{1 + \dfrac{(0.07 \text{ feet per foot})/0.02\,(\text{feet per foot})}{\left[1 + \dfrac{(0.07 \text{ feet per foot})/0.02\,(\text{feet per foot})}{(8 \text{ feet by } 2 \text{ feet}) - 1}\right]^{2.67} - 1}}$$

$$E_0 = 0.66$$

d) Find Q: Solve Equation 3-4 for Q.

$$Q = \frac{Q_s}{1 - E_0}$$

$$Q = \frac{0.61 \text{ cubic feet per second}}{1 - 0.66}$$

$$Q_s = 1.8 \text{ cubic feet per second}$$

Example 2: Spread in a Valley Gutter Section

Given:
6-inch vertical curb
2.5 feet-wide gutter
2 percent pavement crown slope
Mountable curb with 3 percent gutter slope
Capacity of 10 cubic feet per second
1 percent street grade
Assume n = 0.016

Find: Spread for the given capacity.

Solution:

1) Calculate spread for the given capacity.

The gutter is a valley gutter where the capacity is distributed among the valley and street section.

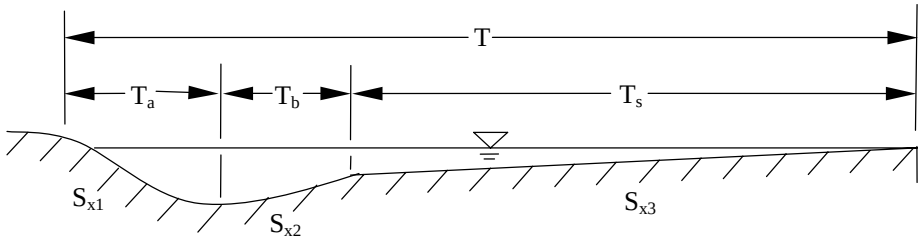

s	=	0.01 feet per foot	S_{x1}	=	1 feet per foot	T_a	=	0.5 feet
S_x	=	0.02 feet per foot	S_{x2}	=	0.03 feet per foot	T_b	=	2 feet
d	=	0.5 feet						

Calculate the spread with Equation 3-1 by first calculating intermediate slope from Equation 3-8. Compare spread from intermediate slope calculation with valley section width, W. If spread is less than valley section width, then the spread is entirely contained within the gutter. If spread is greater than valley section width, then the spread is partially being conveyed along the street.

a) Find S_a: Solve Equation 3-8 for S_a.

$$S_a = \frac{(1\ \textit{feet per foot})(0.03\ \textit{feet per foot})}{1\ \textit{feet per foot} + 0.03\ \textit{feet per foot}}$$

$$S_a = 0.029\ \textit{feet per foot}$$

b) Find T': Rearrange Equation 3-1 and solve for T'.

$$T' = \left[\frac{Qn}{0.56 S_a^{1.67} s^{0.5}}\right]^{0.375}$$

$$T' = \left[\frac{(1\,\text{cubic}\ \textit{feet per second})(0.016)}{(0.56)(0.029\ \textit{feet per foot})^{1.67}(0.01\ \textit{feet per foot})^{0.5}}\right]^{0.375}$$

$$T' = 5.71 \; feet$$

$$T' > T_a + T_b = 2.5 \; feet$$

c) Find S_a: Calculate a new adjusted slope by assuming a spread and weighting the slopes with S_{x2} and S_x. Assume a spread of 7 feet, weight slopes, and solve Equation 3-8 for S_a.

$$S = \frac{(2 \; feet)(0.03 \; feet \; per \; foot) + (5 \; feet)(0.02 \; feet \; per \; foot)}{7 \; feet}$$

$$S = 0.0229 \; feet \; per \; foot$$

$$S_a = \frac{(1 \; feet \; per \; foot)(0.0229 \; feet \; per \; foot)}{1 \; feet \; per \; foot + 0.0229 \; feet \; per \; foot}$$

$$S_a = 0.0224 \; feet \; per \; foot$$

d) Find T': Substitute S_a and into Equation 3.1 for S_x and solve for T'.

$$T' = \left[\frac{(1 cubic \; foot \; per \; second)(0.016)}{(0.56)(0.0224 \; feet \; per \; foot)^{1.67}(0.01 \; feet \; per \; foot)^{0.5}} \right]^{0.375}$$

$$T' = 6.72 \; feet$$

e) Find S_a: Reiterate between Steps c) and d) until the spread, T' converges.

$$S = \frac{(2 \; feet \; per \; foot)(0.03 \; feet \; per \; foot) + (4.72 \; feet \; per \; foot)(0.02 \; feet \; per \; foot)}{6.72 \; feet}$$

$$S = 0.0230 \; feet \; per \; foot$$

$$S_a = \frac{(1 \; feet \; per \; foot)(0.0230 \; feet \; per \; foot)}{1 \; feet \; per \; foot + 0.0230 \; feet \; per \; foot}$$

$$S_a = 0.0225 \; feet \; per \; foot$$

f) Find T': Substitute S_a and into Equation 3.1 for S_x and solve for T'.

$$T' = \left[\frac{(1\,cubic\ feet\ per\ second)(0.016)}{(0.56)(0.0225\ feet\ per\ foot)^{1.67}(0.01\,feet\ per\ foot)^{0.5}} \right]^{0.375}$$

$$T' = 6.70\ feet \approx 6.72\ feet$$

3.2.2 Street Capacity for Major Storm

Determination of the allowable capacity for the major storm shall be based upon allowable depth and inundated area. Excessive depths at the crown and gutter areas of the street may present hazardous conditions for emergency vehicles. When the maximum inundation depth or cross street flow depth is reached, a separate storm drainage system, additional inlets, or additional storm drainage capacity shall be provided and designed on the basis of the major storm. The allowable depth and inundated area for the major storm shall be limited as set forth in Section 1.3 Design Policy and summarized here in Tables 3-6 and 3-7. Table 3-6 outlines the major storm criteria for allowable street inundation.

TABLE 3-6
MAJOR STORM RUNOFF ALLOWABLE STREET INUNDATION

Street Classification	Allowable Depth and Inundated Areas
Alley and Local Street	The depth of water over the gutter flow line shall not exceed 12 inches. Velocities shall not exceed 8 feet per second.
Major Collector and Both Thoroughfares	The depth of water at the street crown shall not exceed 6 inches in order to allow operation of emergency vehicles. The depth of water over the gutter flow line shall not exceed 12 inches. Velocities shall not exceed 8 feet per second.
Freeway	No inundation is allowed.

Cross flows, flows that pass over the crown of a street, also need to be regulated for traffic interference and public safety concern. Table 3-7 outlines the major storm criteria for cross flows.

TABLE 3-7
MAJOR STORM RUNOFF ALLOWABLE CROSS STREET FLOW

Street Classification	Maximum Cross Flow Depth
Alley and Local Street	12 inches
Collector and Thoroughfare	6 inches or less over crown
Freeway	None

Calculating Gutter Capacity

When the allowable depth and inundated area is determined from Tables 3-6 and 3-7, the flow capacity shall be calculated using Equation 3-1 with an "n" value applicable to the actual boundary conditions encountered.

3.2.3 Ponding

The term “ponding” shall refer to areas where runoff is restricted to the street surface by sump inlets, street intersections, low points, intersections with drainage channels, or other reasons.

Minor Storm

Limitations for pavement encroachment by ponding for the minor storm shall be those presented in Tables 3-2 and 3-3. These limitations shall determine the allowable depth at inlets, gutter turnouts, culvert headwaters, and other hydraulic structures.

Major Storm

Limitations for depth and inundated area for major storms shall be those presented in Tables 3-6 and 3-7. These limitations shall determine the allowable depth at inlets, gutter turnouts, culvert headwaters, and other hydraulic structures.

3.3 INTERSECTION LAYOUT CRITERIA

The following design criteria are applicable at intersections of urban streets. Gutter capacity limitations covered in Section 3.2 Design Criteria shall apply along the street, while this section shall govern at the intersection.

3.3.1 Gutter Capacity, Minor Storm

Pavement Encroachment

Limitations at intersections for pavement encroachment shall be as given in Tables 3-2 and 3-3.

Intersections typically comprise streets of varying cross sections. The capacity of gutters on the intersecting streets or even in the transitioning area may create encroachment problems elsewhere. Therefore, the capacity of each gutter approaching an intersection shall be calculated based upon the most critical cross section as determined. Sections with substantial variation in longitudinal slopes shall be calculated on either of the following two criteria:

A. Flow Direction Change at Intersection

When the gutter flow must undergo a direction change at the intersection greater than 45 degrees, the slope used for calculating capacity shall be the effective gutter slope, defined as the average of the gutter slopes at 0 feet, 25 feet, and 50 feet from the geometric point of intersection of the two gutters (see Figure 3-1).

B. Flow Interception by Inlet

When gutter flow will be intercepted by an inlet on continuous grade at the intersection, gutter slope shall be utilized for calculations. Under this condition, the points for averaging shall be 0 feet, 25 feet, and 50 feet upstream from the inlet (see Figure 3-1).

3.3.2 Gutter Capacity, Major Storm

Allowable Depth and Inundated Area

The allowable depth and inundated area for the major storm shall be limited as set forth in Tables 3-6 and 3-7.

Capacity

The carrying capacity of each gutter approaching an intersection shall be calculated, based upon the most critical cross section.

The grade used for calculating capacity shall be as covered in Gutter Capacity, Design Storm.

3.3.3 Ponding

Minor Storm

The allowable pavement encroachment for the minor storm shall be as presented in Tables 3-2 and 3-3.

Major Storm

The allowable depth and inundated area for the major storm shall be as presented in Tables 3-6 and 3-7.

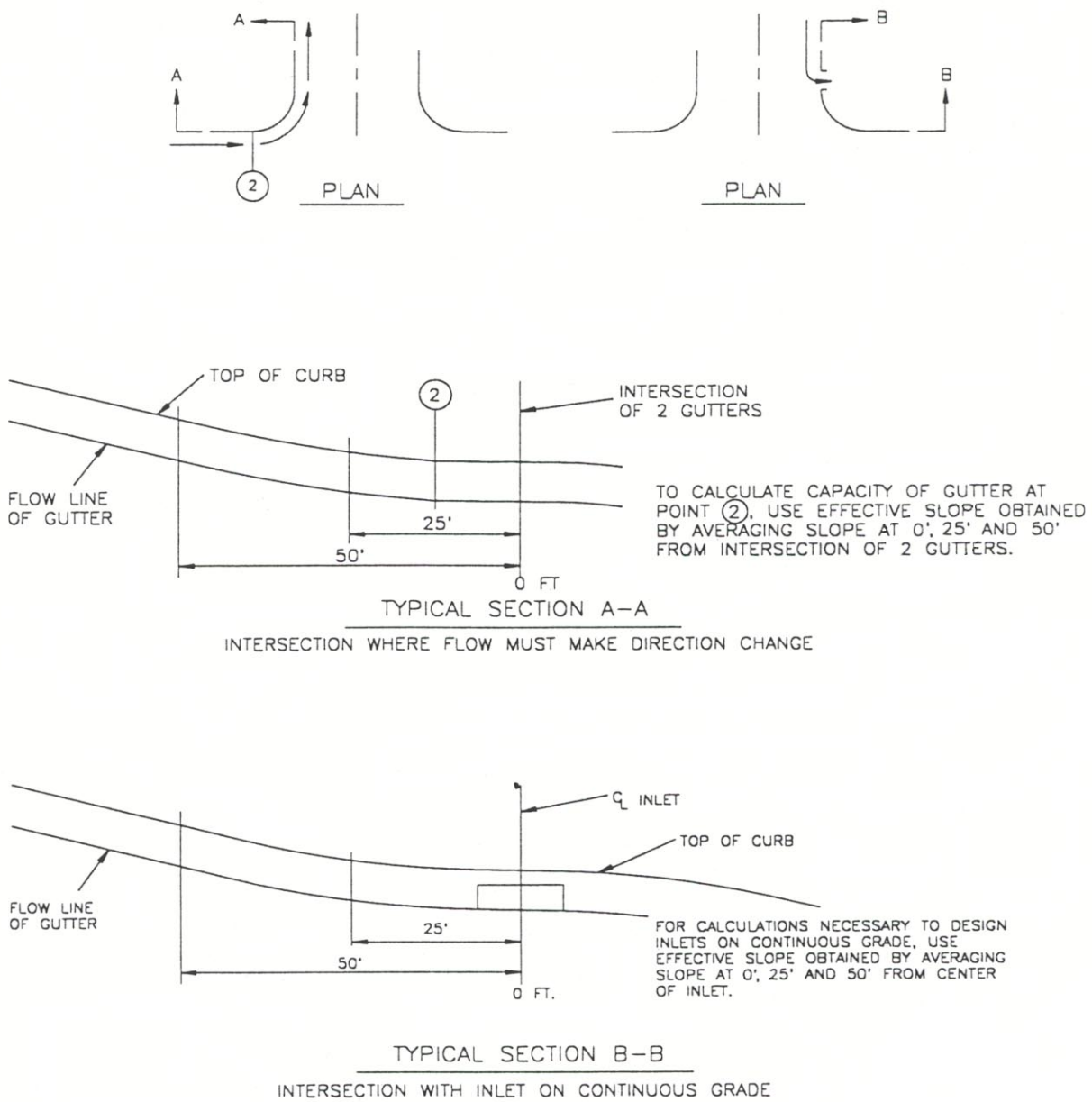

Source: Denver Regional Council of Governments.

Figure 3-1 Intersection Drainage

This Page Intentionally Left Blank

SECTION 4
STORM INLETS

Page

TABLE

Table **Page**

FIGURE

Figure **Page**

4.1 INTRODUCTION

The purpose of this section is to present the significance of the hydraulic elements of storm inlets and their appurtenances to a storm drainage system. The hydraulic capacity of a gutter inlet depends upon its geometry and upon the characteristics of the gutter flow. The inlet capacity governs both the rate of water removed from the gutter and the amount of water that can enter the storm sewer system. Many costly storm sewers flow at less than design capacity because the storm runoff cannot get into the sewers. Inadequate inlet capacity or poor inlet location may cause flooding on the traveled way and create a safety hazard or interrupt traffic. Limitations on depth of street inundation are presented in Section 1.3 Design Policy and Section 3 Street Drainage.

4.2 INLET TYPES

Gutter inlets can be divided into the following three major classes, each with many variations: (1) curb-opening inlets; (2) grate inlets; and, (3) combination inlets. The City of Concord (City) has approved the use of specific inlets, as identified in Figure 4-1. The placement of two inlets side by side is referred to as double inlets and is acceptable.

Brief descriptions of the allowable inlet types follows and is highlighted in Figure 4-1:

A. Grate inlets. These inlets consist of an opening in the storm sewer system covered by one or more grate. Their use within the City is limited to depressed areas outside the curb and gutter section, such as within roadway medians and ditches and along storm sewers connecting other curb and gutter systems. Grate inlets situated in these conditions are typically referred to as drop inlets.

B. Combination inlets. These units consist of both a curb-opening and a grate inlet acting as a single unit.

In mathematical form, inlet efficiency, E, is defined by Equation 4-1:

$$E = \frac{Q_i}{Q} \tag{4-1}$$

where:

E	=	efficiency of inlet
Q_i	=	intercepted flow by inlet, in cubic feet per second
Q	=	total gutter flow, in cubic feet per second

The discharge that bypasses the inlet, Q_c, is termed carry-over or bypass flow. The intercepted flow of all inlet configurations increases with increasing gutter flow; however, inlet efficiency generally decreases with increasing gutter flow.

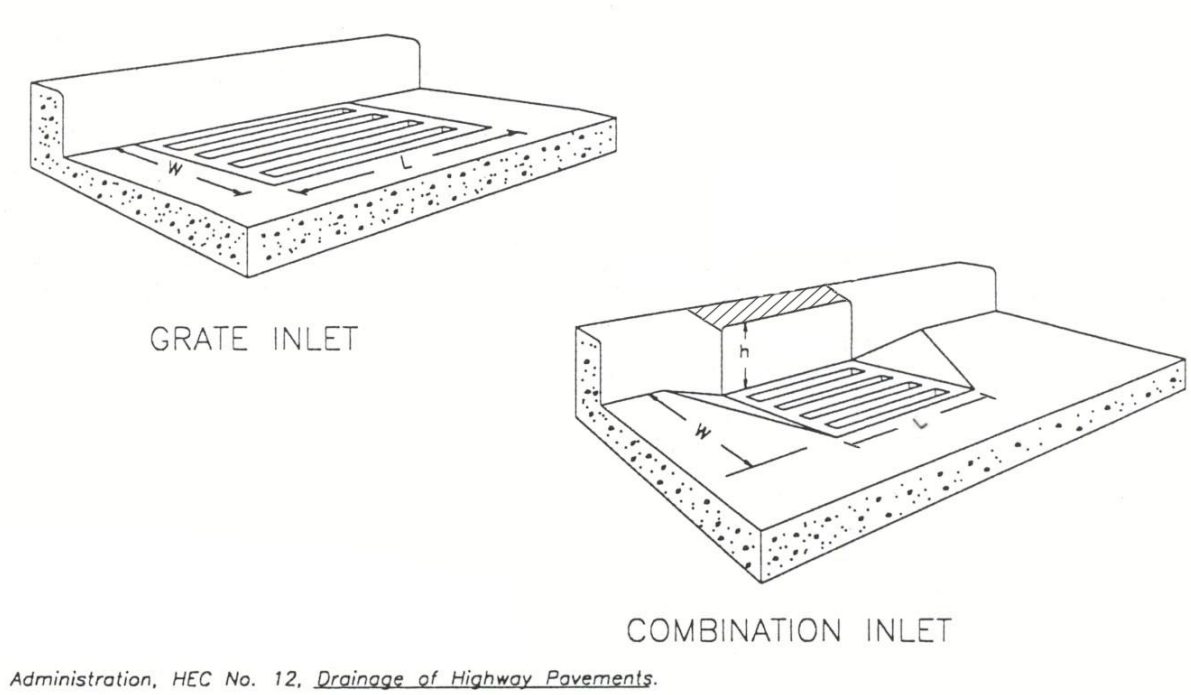

Administration, HEC No. 12, Drainage of Highway Pavements.

Figure 4-1 Allowable Inlet Types

Factors affecting gutter flow also affect inlet interception capacity. The interception capacity of a grate inlet depends on the amount of water flowing over the grate, the size and configuration of the grate, and the velocity of flow in the gutter. The efficiency of a grate is dependent on the same factors and total flow in the gutter.

The interception capacity of a combination inlet consisting of a grate and curb-opening does not differ materially from that of a grate. Interception capacity and efficiency are dependent on the same factors which affect grate capacity and efficiency. However, as the depth of water in the gutter increases, the curb-opening greatly increases the interception capacity. Curb-opening inlet interception capacity and efficiency are increased even further by the use of a gutter depression at the curb-opening or a depressed gutter which concentrates runoff closer to the curb line.

4.3 INLET CLOGGING

All types of inlets are subject to clogging. Attempts to simulate clogging tendencies in the laboratory have not been successful, except to demonstrate the importance of parallel bar spacing in debris handling efficiency. Grates with wider spacings of longitudinal bars pass debris more efficiently. Problems with clogging are largely local since the amount of debris varies significantly from one neighborhood to another. Some neighborhoods may contend with only a small amount of debris while others experience extensive clogging of drainage inlets. Although, the City has an ongoing maintenance program for inlet clearing and cleaning, clogging should always be considered in the design of storm inlets. The total length or area of the inlet should be adjusted to account for clogging.

Common practice has been to apply a standard reduction percentage, such as 50 percent for grates and 25 percent curb openings, to the length or area of an inlet. This; however, presents a problem of excessive placement of inlets due to the reduction in capacity of all inlets, when typically only the initial inlet in a series becomes clogged. Equation 4-2 provides a relationship for distributing the effect of clogging over a series of inlets.

$$C = \frac{C_o}{N\left(1-e\right)} \tag{4-2}$$

where:

C	=	multiple unit clogging factor
C_o	=	single unit clogging factor (50 percent for grates and 25 percent for curb-openings)
N	=	number of inlets in series
e	=	decay ratio less than unity (0.5 for grates and 0.25 curb-openings)

The interception of an inlet on a grade is proportional to the inlet length and a sag is proportional to the inlet opening area. Therefore, the clogging factor shall be applied to the length for inlets on grade:

$$L_e = L\,(1 - C) \tag{4-3}$$

where:

L_e	=	effective unclogged length, in feet
L	=	length of inlet, in feet
C	=	multiple unit clogging factor

For inlets in sag the clogging factor shall be applied to the opening area of the inlet:

$$A_e = A\,(1 - C) \tag{4-4}$$

where:

A_e	=	effective unclogged area, in square feet
A	=	area of inlet, in square feet
C	=	multiple unit clogging factor

4.4 INLET LOCATION

In general, inlets should be placed at all low points in the gutter grade and at intersections to prevent the gutter flow from crossing traffic lanes of the intersecting road. In urban locations, inlets are normally placed upgrade from pedestrian crossings to intercept the gutter flow before it reaches the crosswalk. Location should also be coordinated to avoid inlet location and the effect of ponding near pedestrian facilities (e.g., ramps) governed by the regulations of the American Disability Act. Gutter flow should be intercepted where pavement surfaces transition between superelevated and normal sections. Placement of inlets before the change in the pavement lessen water flowing across the roadway and thus preventing potential driving hazards, such as hydroplaning and icing. Where a curbed roadway crosses a bridge, the gutter flow should be intercepted and not be permitted to flow onto the bridge.

Inlet spacing shall be limited to a maximum distance of 300 feet where other design criteria, such as pavement encroachment and depth do not control within that distance.

4.4.1 <u>Spacing of Inlets on Grade</u>

Inlets should be spaced so as to limit the spread of the water on the pavement in accordance with criteria in Section 3.2 Design Criteria for street drainage.

With the maximum spread fixed and with a given pavement cross and longitudinal slope, the flow in the gutter is also fixed and can be calculated as shown in Section 3.2 Design Criteria. The spacing of inlets must be equal to or less than the length of pavement needed to generate the discharge corresponding to the allowable spread on the pavement. The flow bypassing each inlet must be included in the flow arriving at the next inlet.

An example of the computations for inlet spacing for a combination inlet follows:

Example 1: Initial Inlet Spacing

Given: Non-residential minor collector (36-foot pavement width)
2-foot curb-and-gutter section
2 percent pavement crown slope
1 percent longitudinal street slope
Composite C for pavement and shoulder = 0.95, as determined from contributing area, see Table 2-4
Contributing area is 200 feet to each side of the centerline
3-foot long by 2-foot wide combination inlet with 2 inch depression
Assuming n = 0.014 for rough asphalt Table 3-4

Find: Maximum design inlet spacing during the minor storm

Solution:

1) Determine allowable pavement encroachment.

From Table 3-2, a collector street has an encroachment that requires half a single lane in each direction to be free of encroachment. Therefore, encroachment may spread to a width of 11 feet. Half a full travel lane in a single direction is 9 feet wide plus the 2 feet provided by the gutter section.

2) Compute the runoff from the contributing area, given the rainfall intensity for a minor storm, I, and the coefficient of runoff, C. The rainfall intensity for a minor storm is 4 inches/hour. Also, remember to convert area to acres before computing and that the Rational Method equation provided below is not dimensionally correct (i.e., the units will not cancel out).

$$Q = CIA$$

$$Q = (0.95)\,(4\ \textit{inches per hour})\left[\frac{200\ \textit{feet} \times L\ \textit{feet}}{43{,}560\ \textit{feet}^2\ \textit{per hour}}\right]$$

$$Q = 0.017L$$

3) Compute the discharge for the standard gutter section that is limited by the allowable spread, T = 11 feet. See Section 3.2 Design Criteria for calculation methodology.

Q = 3.09 cubic feet per second

4) Compute the location of the first inlet by substituting the allowable capacity, Q, into the relationship derived in Step 2.

$$Q = 0.017L$$

$$L = \frac{3.09 \text{ cubic feet per second}}{0.017}$$

$$L = 181 \text{ feet}$$

This distance represents the minimum length at which the initial inlet must be located to meet the spread criterion. Subsequent inlet spacing intervals are further determined by spread criterion; however, the capacity, Q, will include not only the contributing drainage but that of the bypassed flow from the previous inlet as well.

4.4.2 Spacing of Inlets in Sag

Sag vertical curves differ one from another in the potential for ponding, and criteria adopted for inlet spacing in sags should be applied only where traffic could be unduly disrupted if an inlet became clogged or runoff from the design storm was exceeded. Therefore, criteria adopted for inlet spacing in sag vertical curves are not applicable to the sag curve between two positive or two negative longitudinal slopes. Also, they should not be applied to locations where ponding depths could not exceed curb height and ponding widths would not be unduly disruptive, as in sag locations on embankment.

For minor streets, those including minor collectors, local streets, and alleys, a double catchbasin shall be placed in the sag to facilitate drainage and prevent excessive ponding. This approach is sufficient to address the hazard and inconvenience caused by ponding on a minor street without requiring an excessive inlet system.

For major streets, including major collectors, thoroughfares, and expressways, it is engineering practice to place flanking inlets on each side of the inlet at the low point in the sag. The flanking inlets should be placed so that they will limit spread on low gradient approaches to the level point and act in relief of the inlet at the low point if it should become clogged or if the design spread or depth is exceeded.

The flanking approach requires three inlets, one at the low point and one on each side of this point, where the grade elevation is approximately 0.2 feet higher than at the low point. The additional inlets furnish added capacity to allow for flow bypassing the upgrade inlets and provide a safety factor if the sag inlet becomes clogged. These inlets limit the deposition of sediment on the road in the sag, and they also reduce flow arriving at the low point and thereby prevent ponding on the road. The inlets should be spaced so as to limit the spread and depth of water on the pavement to the criterion outlined in Section 3.2 Design Criteria.

Table 4-1 shows the spacing required for various depths at curb criteria and vertical curve lengths defined by the following dimensionless coefficient:

$$X = (200dK)^{0.5} \tag{4-5}$$

where:

X = distance from the low point, feet
d = depth at curb, feet
K = dimensionless Coefficient, Table 4-1

$$K = \frac{L}{A} \tag{4-6}$$

where:

K = dimensionless coefficient
L = length of vertical curve, in feet
A = algebraic difference in approach grades (G_2 - G_1)

TABLE 4-1
DISTANCE TO FLANKING INLETS IN SAG VERTICAL CURVE LOCATIONS

Depth at Curb (feet)									
Speed (mph)	**"K" L/A**	**0.1**	**0.2**	**0.3**	**0.4**	**0.5**	**0.6**	**0.7**	**0.8**
20	20	20	28	35	40	45	49	53	57
25	30	24	35	42	49	55	60	65	69
30	40	28	40	49	57	63	69	75	80
35	50	32	45	55	63	71	77	84	89
40	70	37	53	65	75	84	92	99	106
45	90	42	60	73	85	95	104	112	120
50	110	47	66	81	94	105	115	124	133
55	130	51	72	88	102	114	125	135	144
60	160	57	80	98	113	126	139	150	160
	*167	58	82	100	116	129	142	153	163
65	180	60	85	104	120	134	147	159	170
70	220	66	94	115	133	148	162	176	188

Note: * Maximum drainage K = 167

The AASHTO policy on geometrics specifies maximum K values for various design speeds, as shown in Table 4-1.

Example 2: Spacing of Inlet in a Sag

Given: 2 percent pavement crown slope
Allowable spread not to exceed 10 feet
Speed limit for highway is 55 MPH
Dimensionless coefficient, K = 130

Find: Location of flanking inlets if determined: (1) in relief of the inlet at the low point when depth at the curb exceeds design depth, and (2) when depth at the curb is 0.1 foot less than depth at design spread.

Solution:

1) Find depth at curb for allowable spread using Equation 3-2

$$d = TS_x$$

$$d = (10\ \textit{feet})(0.02\ \textit{feet per foot})$$

$$d = 0.2\ \textit{feet}$$

a) From Table 4-1, using K = 130 and a depth of 0.2 feet, spacing to flanking inlet = 72 feet

b) From Table 4-1, using a depth 0.1 feet less than the design depth of 0.2 feet, yields a depth of 0.1 feet. For the same K and depth at curb of 0.1 feet, spacing to flanking inlets = 51 feet

The purpose in providing Table 4-1 is to facilitate the selection of criteria for the location of flanking inlets based on the ponding potential at the site, the potential for clogging of the inlet at the low point, design spread, design speeds, traffic volumes, and other considerations which may be peculiar to the site under consideration. The depth at curb criterion which does not vary with these considerations neglects consideration of cross slope and design spread; it may be unduly conservative at some locations. Location of flanking inlets at a fixed slope rate on the vertical curve also neglects consideration of speed facilities and is not at all conservative for high speed facilities.

Except where inlets become clogged, spread on low gradient approaches to the low point is a more stringent criterion for design than the interception capacity of the sag inlet. A gradient of 0.5 percent is to be maintained within 50 feet of the level point in order to provide for adequate drainage.

4.5 GRATE INLETS

Grate inlets will intercept all of the gutter flow passing over the grate (frontal flow) if the grate is sufficiently long and the gutter flow velocity is low. Only a portion of the frontal flow will be intercepted if the velocity is high or the grate is short and splash-over occurs. A part of the flow along the side of the grate will be intercepted, dependent on the cross slope of the pavement, the length of the grate, and flow velocity. The City of Concord Technical Standards for Streets has standards and details for acceptable grate inlets for use in the City. Use North Carolina Department of Transportation standards and details for grate inlet types, construction, and performance where local City standards and details are not available (e.g. grates for use in bike lanes where required).

4.5.1 Capacity of Grate Inlets on Grade

The ratio of frontal flow to total gutter flow, E_o, for a straight cross slope is expressed by Equation 4-7 for either straight cross slopes or depressed gutter sections.

$$E_o = \frac{Q_w}{Q} = 1 - \left(1 - \frac{W}{T}\right)^{2.67} \tag{4-7}$$

where:

Q	=	total gutter flow, in cubic feet per second
Q_w	=	flow in width W, in cubic feet per second
W	=	width of grate, in feet
T	=	total spread of water, in feet

The ratio of side flow, Q_s, to total gutter flow is:

$$\frac{Q_s}{Q} = 1 - \frac{Q_w}{Q} = 1 - E_o \tag{4-8}$$

where:

Q_s	=	ratio of side flow, in cubic feet per second
Q	=	total gutter flow, in cubic feet per second
Q_w	=	flow in width W, in cubic feet per second
E_o	=	ratio of frontal to total gutter flow

The ratio of frontal flow intercepted to total frontal flow, R_f, is expressed by Equation 4-9 which takes into account grate length, bar configuration, and gutter velocity at which splash-over occurs. This ratio is equivalent to frontal flow interception efficiency.

$$R_f = 1 - 0.09(V - V_o) \tag{4-9}$$

where:

R_f	=	frontal flow interception efficiency
V	=	velocity of flow in the gutter, in feet per second
V_o	=	gutter velocity where splash-over first occurs, in feet per second

The ratio of side flow intercepted to total side flow, R_s, or side flow interception efficiency, is expressed by the following equation.

$$R_s = \frac{1}{1 + \frac{0.15V^{1.8}}{S_x L^{2.3}}} \tag{4-10}$$

where:

R_s	=	side flow interception efficiency
V	=	velocity of flow in the gutter, in feet per second
S_x	=	cross slope, in feet per foot
L	=	length of the grate, in feet

The efficiency, E, of a grate is expressed as:

$$E = R_f E_o + R_s(1 - E_o) \tag{4-11}$$

where:

E	=	grate efficiency
R_f	=	frontal flow interception efficiency
E_o	=	ratio of frontal flow to total gutter flow
R_s	=	side flow interception efficiency

The first term on the right side of Equation 4-11 is the ratio of intercepted frontal flow to total gutter flow, and the second term is the ratio of intercepted side flow to total side flow. The second term is insignificant with high velocities and short grates.

The interception capacity of a grate inlet on grade is equal to the efficiency of the grate multiplied by the total gutter flow:

$$Q_i = EQ = Q[R_f E_o + R_s(1 - E_o)] \tag{4-12}$$

where:

Q_i	=	flow intercepted, in cubic feet per second
E	=	grate efficiency
Q	=	total gutter flow, in cubic feet per second
R_f	=	frontal flow interception efficiency
E_o	=	ratio of frontal flow to total gutter flow
R_s	=	side flow interception efficiency

Example 3: Interception Capacity of Grate Inlets on Grade

Given: Non-residential major collector (36-foot pavement width)
2-foot curb-and-gutter section
2 percent pavement crown slope
1 percent longitudinal street slope
3-foot long by 2-foot wide grate inlet with 2 inch depression
Assume n = 0.016 for rough asphalt form Table 3-4

Find: Interception capacity of a 3-foot long and 2-foot wide standard grate

Solution:

1) Determine allowable pavement encroachment.

From Table 3-2, a major collector street has an allowable encroachment of half a travel lane in a single direction. Therefore, encroachment may spread to a width of 11 feet. Half of one travel lane in a single direction is 9 feet wide plus the 2 feet provided by the gutter section.

2) Calculate the ratio of frontal flow to total gutter flow, E_0, using Equation 4-7.

$$E_0 = 1 - \left(1 - \frac{W}{T}\right)^{2.67}$$

$$E_0 = 1 - \left(1 - \frac{2\ feet}{11\ feet}\right)^{2.67}$$

$$E_0 = 0.41$$

4.5.2 Capacity of Grate Inlets in Sag

A grate inlet in sag operates first as a weir having a crest length roughly equal to the outside perimeter (P) along which the flow enters. Bars are disregarded and the side against the curb is not included in computing P. Weir operation continues to a depth, d, of about 0.4 feet above the top of grate and the discharge intercepted by the grate is:

$$Q_i = 3.0Pd^{1.5} \tag{4-13}$$

where:

Q_i	=	rate of discharge into the grate opening, in cubic feet per second
P	=	perimeter of grate opening, in feet, disregarding bars and neglecting the side against the curb
d	=	depth of water at grate, in feet

When the depth at the grate exceeds about 1.4 feet, the grate begins to operate as an orifice and the discharge intercepted by the grate is:

$$Q_i = 0.67A_8(2gd)^{0.5} = 5.37A_8d^{0.5} \tag{4-14}$$

where:

Q_i	=	rate of discharge into the grate opening, in cubic feet per second
A_g	=	clear opening of the grate, in square feet
g	=	acceleration of gravity, 32.2 feet per second squared
d	=	depth of ponded water above top of grate, in feet

Between depths of approximately 0.4 feet and approximately 1.4 feet (over the grate), the operation of the grate inlet is indefinite due to vortices and other disturbances. The capacity of the grate is somewhere between that given by the weir and orifice equations.

Except where inlets become clogged, spread on low gradient approaches to the low point is a more stringent criterion for design than the interception capacity of the sag inlet. A minimum gradient of 0.5 percent should be maintained within 50 feet of the level point in order to provide for adequate drainage.

Drop inlets being used in depressed areas in roadway medians or ditches or along storm sewers that connect major curb and gutter systems are governed by the same hydraulic principles. A drop inlet operates as a weir to certain depth at which it transitions into orifice flow. Equations 4-13 and 4-14 govern the performance of drop inlets. There are no specific criteria for drop inlets. However, design should be taken into consideration so that the flooding of adjacent property, buildings, utility infrastructure, private roadway, and pedestrian access is minimized.

Example 4: Interception Capacity of Grate Inlet in Sag

Given: Local street (24-foot pavement width)
Flow from right and left of grate, Q_1 = 3.6 cfs and Q_2 = 4.4 cfs, respectively
3 percent pavement crown slope
1 percent longitudinal street slope
6-inch vertical curb

Find: Grate inlet size for specified flow and depth at curb under minor storm conditions.

Solution:

1) Determine allowable pavement encroachment.

From Table 3-2, a local street has an allowable encroachment to the crown of the road. Therefore, encroachment may spread to a width of 14 feet. Each travel lane is 12 feet wide plus the 2 feet provided by the gutter section. Also, the curb is not allowed to overtop.

2) Calculate design discharge, Q_i, and use Equation 4-13 to determine the needed perimeter, P, to handle the capacity.

$$Q_i = 3.6 \textit{ cubic feet per second} + 4.4 \textit{ cubic feet per second} = 8.0 \textit{ cubic feet per second}$$

$$P = \frac{Q_i}{3d^{1.5}}$$

$$P = \frac{8 \textit{ cubic feet per second}}{3(0.5 \textit{ feet})^{1.5}}$$

$$P = 7.54 \textit{ feet}$$

3) From Step 2, a grate must have a perimeter of 7.54 feet to intercept 8 feet^3 per second at a depth of 0.5 feet. Therefore, a single 3-foot long by 2-foot wide grate with a perimeter of 7 feet (the specified grate per City of Technical Standards for Streets) would not meet the requirement for capacity. Either double inlets would need to be constructed next to each other or additional inlets will need to be placed upgrade of the sag.

4) Verify that the minimum grade requirements for a vertical curve are being met by using Equation 3-1 and solving for the spread, T.

$$T = \left[\frac{Qn}{0.56 S_a^{1.67} s^{0.5}} \right]^{0.375}$$

$$T_1 = \left[\frac{(3.6\ \textit{cubic feet per second})(0.016)}{0.56\,(0.03\ \textit{feet per foot})^{1.67}\,(0.003\ \textit{feet per foot})^{0.5}} \right]^{0.375}$$

$$T_2 = \left[\frac{(4.4\ \textit{cubic feet per second})(0.016)}{0.56(0.03\ \textit{feet per foot})^{1.67}\,(0.003\ \textit{feet per foot})^{0.5}} \right]^{0.375}$$

$T_1 = 11.34$ *feet*

$T_2 = 12.22$ *feet*

T_1 and T_2 are less than the allowable encroachment of 14 feet

A double 3 by 2 foot grate is adequate to intercept the design storm at a spread width which does not exceed design spread and American Association of Highway and Transportation Officials requirements are met. The tendency of grate inlets in sag to clog may warrant a combination inlet on the low-gradient approaches.

4.6 COMBINATION INLETS

Combination inlets incorporate a vertical opening in the curb along side the grate placed on grade. The grate portion operates identical to that of a grate only inlet however, the curb opening will intercept a portion of the flow where the flow depth is sufficient (i.e. sag conditions) or clogging of the grate has occurred. The Concord Technical Standards for Streets has standards and details for acceptable combination inlets for use in the City. Use North Carolina Department of Transportation standards and details for grate inlet types, construction, and performance where local Concord standards and details are not available (e.g. grates for use in bike lanes where required). Standards for a double catchbasin and open throat inlet are provided in Figures 4-2 through 4-5 at the end of this section. These standards were adapted from Charlotte-Mecklenburg Land Development Standards and other sources.

4.6.1 Capacity of Combination Inlets on Grade

The interception capacity of combination inlets on grade where the curb opening and the grate are of equal length does not increase interception appreciably greater than a grate alone. Capacity is computed by neglecting the capacity of the curb opening in this situation. Capacity for combination inlets should be calculated using the methodology outlined in Section 4.5 Grate Inlets

4.6.2 Capacity of Combination Inlets in Sag

Combination inlets shall be required for use in sags. The interception capacity of the combination inlet is essentially equal to that of a grate alone in weir flow. In orifice flow, the capacity is equal to the capacity of the grate plus the capacity of the curb opening.

Equation 4-13 can be used for weir flow in combination inlets in sag locations. Where depth at the curb is such that orifice flow occurs, the interception capacity of the inlet is computed by adding Equation 4-13 to that of the curb opening capacity term:

$$Q_i = 0.67A_g(2gd)^{0.5} + 0.67hL\,(2gd_i)^{0.5} \qquad (4\text{-}20)$$

where:

Q_i = intercepted flow by inlet, in cubic feet per second
A_g = clear area of the grate, in square feet
g = acceleration due to gravity, 32.2 feet per second squared
d = depth at the curb, in feet
h = height of curb-opening orifice, in feet
L = length of curb-opening, in feet
d_i = depth at lip of curb-opening, in feet

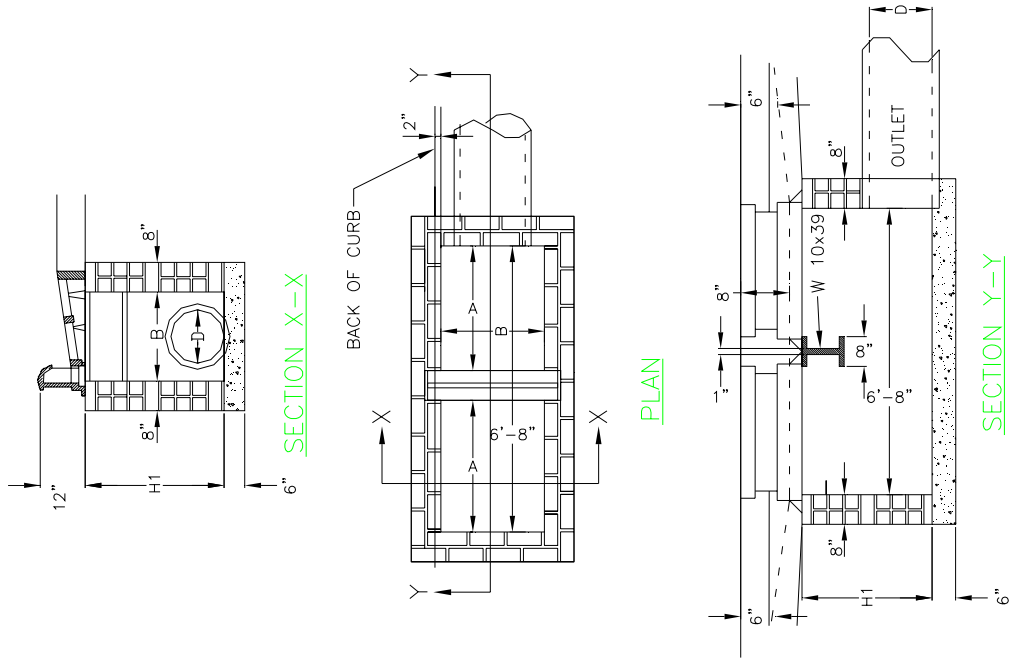

GENERAL NOTES:

1. ALL CONCRETE TO BE 3600 P.S.I COMPRESSIVE STRENGTH.
2. MORTAR JOINTS SHOULD BE BETWEEN 3/8" AND 5/8" THICK.
3. ALL CATCH BASINS OVER 3'–6" IN DEPTH TO BE PROVIDED WITH METAL STEPS ON 1'–2" +/– CENTERS. STEPS SHALL BE IN ACCORDANCE WITH STD. 20.12.
4. CONCRETE BRICK MAY BE USED IN LIEU OF HARD COMMON CLAY BRICK. JUMBO BRICK WILL BE PERMITTED.
5. FOR 8'–0" IN HEIGHT OR LESS USE 8" WALL, OVER 8'–0" IN HEIGHT USE 12",USE 12" WALL TO 6'–0" FROM TOP OF WALL, AND 8" WALL FOR THE REMAINING 6'–0".
6. ALL PIPE IN STORM DRAIN STRUCTURE SHALL BE STRUCK EVEN WITH THE INSIDE WALL, GROUTED AND BRUSHED SMOOTH.
7. WEEP HOLE(S) SHALL BE PLACED IN BACK WALL. A STONE DRAIN CONSISTING OF 1 (ONE) CUBIC FOOT OF NUMBER 78M STONE CONTAINED IN A BAG OF POROUS FABRIC SHALL BE PLACED AT EACH WEEP HOLE.

DIMENSIONS OF BOX AND PIPE

PIPE	SPAN	WIDTH	HEIGHT	W 10
D	A	B	MIN. H1	LENGTH
15"	3'–0"	2'–4"	2'–6"	2'–10"
18"	3'–0"	2'–4"	2'–10"	2'–10"
24"	3'–0"	2'–4"	3'–4"	2'–10"

Figure 4-2 Standard for Double Catch Basin for 15" through 24" Pipe

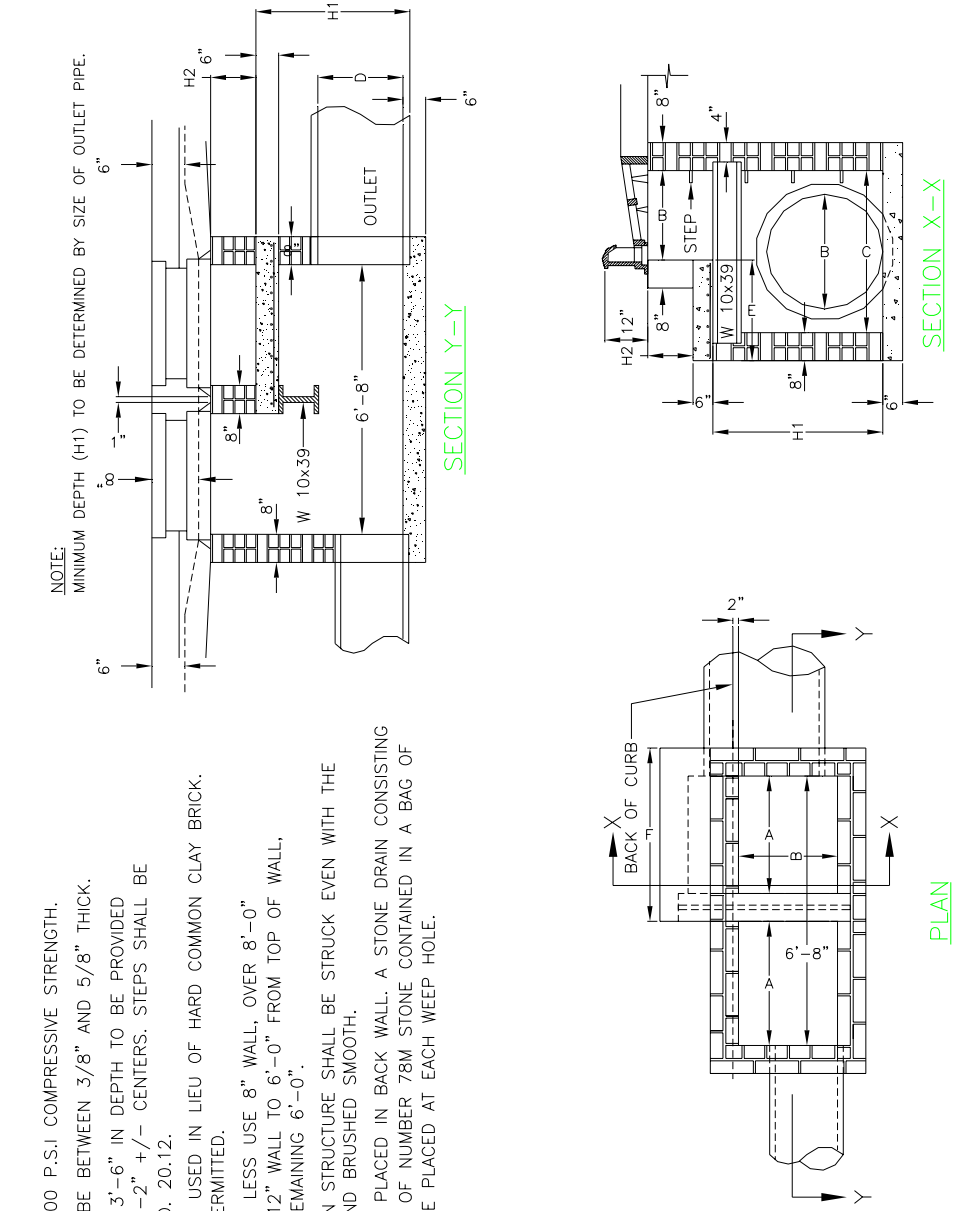

GENERAL NOTES:

1. ALL CONCRETE TO BE 3600 P.S.I COMPRESSIVE STRENGTH.
2. MORTAR JOINTS SHOULD BE BETWEEN 3/8" AND 5/8" THICK.
3. ALL CATCH BASINS OVER 3'-6" IN DEPTH TO BE PROVIDED WITH METAL STEPS ON 1'-2" +/- CENTERS. STEPS SHALL BE IN ACCORDANCE WITH STD. 20.12.
4. CONCRETE BRICK MAY BE USED IN LIEU OF HARD COMMON CLAY BRICK. JUMBO BRICK WILL BE PERMITTED.
5. FOR 8'-0" IN HEIGHT OR LESS USE 8" WALL, OVER 8'-0" IN HEIGHT USE 12",USE 12" WALL TO 6'-0" FROM TOP OF WALL, AND 8" WALL FOR THE REMAINING 6'-0".
6. ALL PIPE IN STORM DRAIN STRUCTURE SHALL BE STRUCK EVEN WITH THE INSIDE WALL, GROUTED AND BRUSHED SMOOTH.
7. WEEP HOLE(S) SHALL BE PLACED IN BACK WALL. A STONE DRAIN CONSISTING OF 1 (ONE) CUBIC FOOT OF NUMBER 78M STONE CONTAINED IN A BAG OF POROUS FABRIC SHALL BE PLACED AT EACH WEEP HOLE.

Figure 4-3 Standard for Double Catch Basin for 30" through 36" Pipe (Sheet A)

15" THRU 24" PIPE

DIMENSIONS OF BOX AND PIPE						
PIPE	SPAN	WIDTH	WIDTH	HEIGHT	HEIGHT	W 10
D	A	B	C	MIN. H1	H2	LENGTH
15"	3'-0"	2'-4"	–	2'-6"	–	2'-10"
18"	3'-0"	2'-4"	–	2'-10"	–	2'-10"
24"	3'-0"	2'-4"	–	3'-4"	–	2'-10"

30" THRU 36" PIPE

DIMENSIONS OF BOX AND PIPE						COVER	TOP SLAB REINFORCMENT						
PIPE	SPAN	WIDTH	WIDTH	HEIGHT	HEIGHT	W 10	DIMENSION	BARS – U		BARS – V		BARS – W		TOT.
D	A	B	C	MIN. H1	H2	LENGTH	E	F	NO.	LENGTH	NO.	LENGTH	NO.	LENGTH	LBS.
30"	3'-0"	2'-4"	3'-4"	3'-2"	VAR.	4'-0"	1'-10"	4'-4"	4	1'-6"	3	4'-1"	3	4'-1"	45
36"	3'-0"	2'-4"	3'-10"	3'-8"	VAR.	4'-6"	2'-4"	4'-4"	4	2'-0"	4	4'-1"	3	4'-1"	49

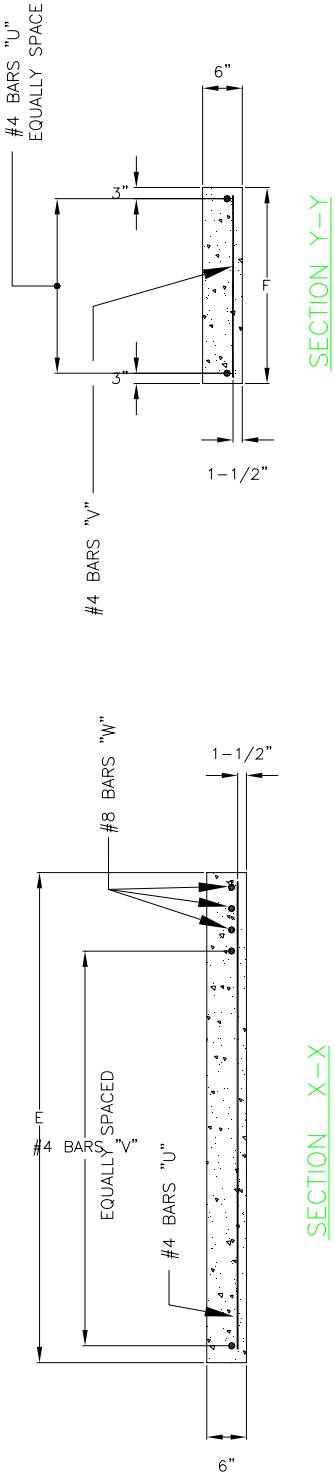

Figure 4-4 Standard for Double Catch Basin for 30" through 36" Pipe (Sheet B)

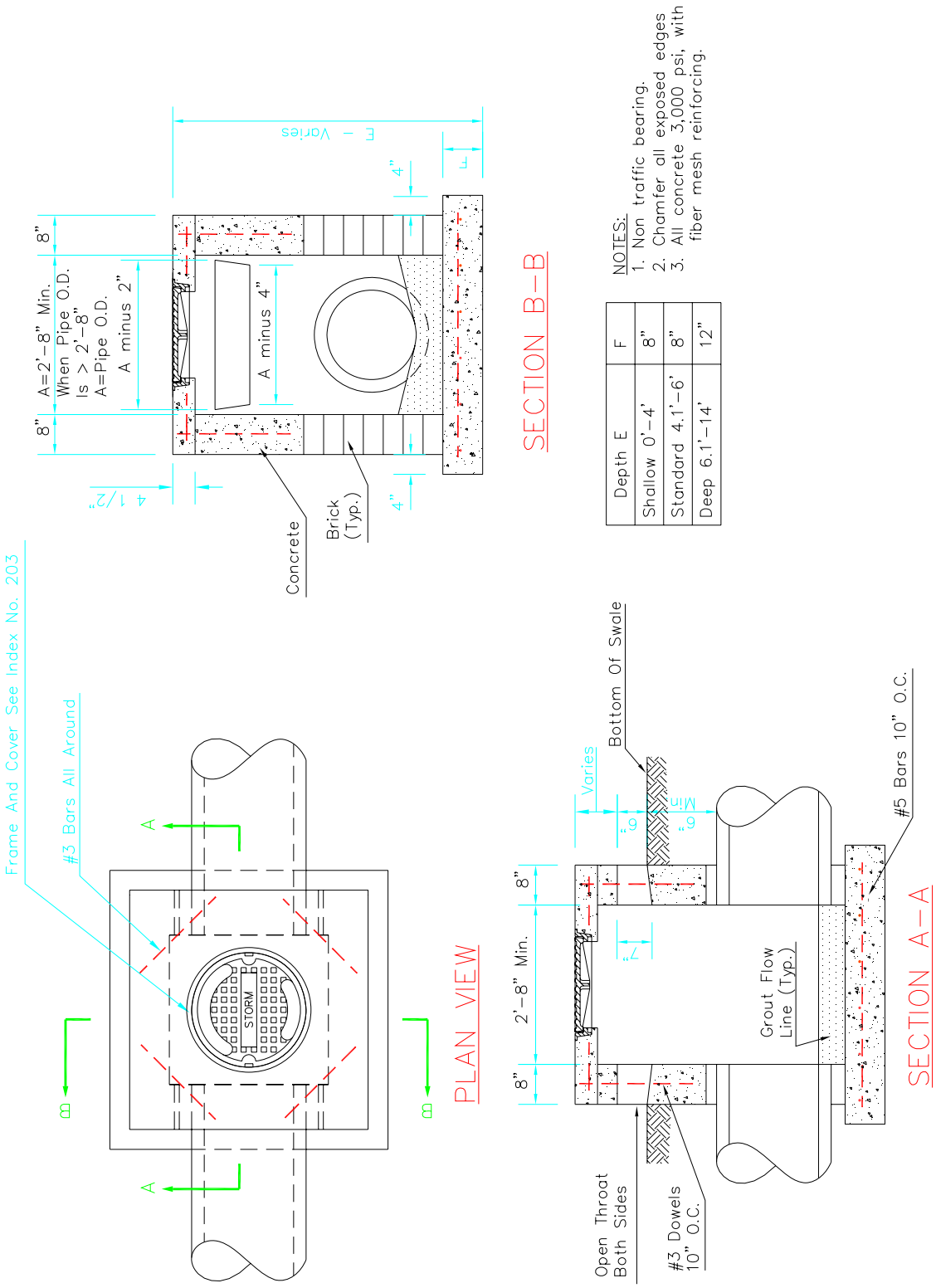

Figure 4-5 Standard for Open Throat Inlet

This Page Intentionally Left Blank

SECTION 5
STORM SEWERS

Page

LIST OF TABLES

Table **Page**

LIST OF FIGURES

Figure **Page**

5.1 INTRODUCTION

This section addresses storm sewer design and function in complex drainage systems. Hydraulically, storm drainage systems consist of conduits (open or enclosed) that transport unsteady and non-uniform free flow. Storm sewers are designed for open-channel flow to satisfy, as well as make possible, the requirements for unsteady and non-uniform flow.

The hydraulics of storm sewers with open channel flow is described by Manning's Equation. Designers must verify that the open channel flow assumption is valid by calculating the hydraulic grade line. All structures and their effect on the hydraulics of the system must be considered.

The design of a storm drainage system is governed by the following seven conditions:

A. Compliance with the City of Concord (City) standards.

B. The system must accommodate the surface runoff resulting from the selected design storm with no damage to physical facilities and minimum interruption of normal traffic.

C. Runoff resulting from major storms must be anticipated and discharged free from impedance without serious damage to physical facilities (such as conveyance past finished floor elevations of buildings and under roadways without washing out embankments and subgrades).

D. The storm drainage system must have a maximum reliability of operation with respect to being structurally sound to its environment where it is placed and performing hydraulically to its intended function for the entire life of design.

E. The storm drainage system must require minimum maintenance (cleaning and clearing obstructions) and must be accessible for maintenance operations.

F. The storm drainage system must be adaptable to future expansion with minimum additional cost and designed to accommodate build-out conditions in the upstream reaches of the drainage area.

G. Site design, swales and natural flow features should be utilized to reduce the need for extensive storm sewer systems whenever possible.

5.2 GENERAL CRITERIA

5.2.1 Frequency of Design Runoff

The runoff design frequency is a function of operational and economic criteria with a special emphasis on public safety. As discussed in other sections of this Article, some types of facilities do not require high levels of protection and periodic flooding is not objectionable. However, for all facilities, the designer must consider the impact of a 100-year design storm and provide for its passage without the loss of life or major property damage.

Table 5-1 indicates the minimum acceptable design storm frequencies for storm sewer system facilities.

TABLE 5-1
STORM SEWER SYSTEM FACILITYDESIGN STORM FREQUENCY

Facility	Storm Return Period (Frequency)
Streets and Gutters	10 years
Inlets	10 years
Storm Sewers	10 years
Cross culverts	25 years
Major Drainage System (culverts over FEMA regulated floodways)	100 years

In addition to meeting the minimum design storm criteria presented in Table 5-1, storm sewer facilities must also be designed to allow the storm drainage system to meet the hydraulic and detention requirements outlined in Section 8 Hydraulics of Detention.

5.2.2 Velocities and Grades

Minimum Grades

Storm sewers should operate with flow velocities sufficient to prevent excessive deposition of solid material, which would result in clogging. The controlling velocity occurs near the bottom of the conduit and is considerably less than the mean velocity. Storm sewers shall be designed to have a minimum allowable slope of 0.5 percent or the slope that will produce a mean velocity of 2.5 feet per second during the design flow, whichever is greater. Any variance of minimum slope must be approved by the City. Outlets of pipes on minimum grade should be designed to avoid sedimentation at the outfall.

Maximum Velocities

Maximum velocities are important for the long-term protection of the interior material of the conduit. The maximum velocity shall not exceed 15 feet per second for reinforced concrete pipe (RCP) or 10 feet per second in corrugated metal pipe or plastic pipe.

Energy dissipaters shall be required at outfalls where pipe flow velocities may exceed erosive velocities defined in the North Carolina Erosion and Sediment Control Planning and Design Manual. These dissipaters must meet the requirements of the North Carolina Sedimentation Pollution Control Act and the Cabarrus County Erosion Control Ordinance.

5.2.3 Pipe Sizes and Material Types

Pipes which are to become an integral part of the public storm sewer system shall be circular and have a minimum diameter of 15 inches for gravity flow. If alternate shapes are required for utility clearance or special conditions, the designer must contact the City for approval. All pipe design and installation must meet the manufacturer's recommendation for minimum depth of cover.

A key consideration in selection of pipe material type involves the design life of the pipe. Required pipe design life shall be a minimum 50 years as certified by the manufacturer. The design professional must meet all manufacturer requirements on which the design life is based. For example, bedding requirements are critical to meeting the pipe design life. New construction or replacement of existing storm sewers within the right-of-way or connecting systems shall require reinforced concrete pipe unless approval from the City for other pipe material has been granted. All reinforced concrete storm sewers shall meet, at a minimum, the requirement of American Association of State Highway Transportation Officials (AASHTO) M170 Classes III-V.

In selecting a roughness coefficient, consideration shall be given to the average conditions during the useful life of the structure. An increased "n" value shall be used primarily in analyzing old conduits where alignment is poor and joints have become rough. If, for example, concrete pipe is being designed at a location and there is reason to believe that the roughness would increase through erosion or corrosion of the interior surface, slight displacement of joints, or entrance of foreign materials, the designer should select a roughness coefficient representing the average condition using engineering judgment. Any selection of "n" values below the minimum or above the maximum, either for monolithic concrete structures, concrete pipe, or corrugated metal pipe, requires the written approval of the City.

The coefficients of roughness listed in Table 5-2, on page 5-4, are used in direct solution of Manning's Equation.

TABLE 5-2
ROUGHNESS COEFFICIENTS FOR STORM SEWERS

Materials of Construction	Design Coefficient[1]
Concrete Pipe	0.012-0.015
Corrugated Metal	0.020-0.027
Cast Iron	0.011-0.015
Vertified Clay Pipe	0.011-0.017
Brick with cement mortar	0.012-0.017
Plastic	0.010-0.015
PVC	0.010

[1] Designer may select a single representative "n"

5.2.4 Manhole Location

Manholes shall be located at pipe junctions and changes in alignment and slope sections. Manholes shall be located at intervals not to exceed 500 feet for any pipe.

5.2.5 Alignment

In general, storm sewer alignment between structures shall be straight. Any pipe deflection must be approved by the City and in no case can it exceed manufacturer's recommendation. Storm sewers must be outside the curb line and street crossings shall be at 90 degrees. The City must approve all curved alignments prior to installation.

5.3 FLOW IN STORM SEWERS

5.3.1 Pipe Flow

All storm sewers shall be designed by the application of the Continuity Equation and Manning's Equation, as follows:

$$Q = AV \tag{5-1}$$

$$Q = \frac{1.49}{n} AR^{0.67} S_f^{\ 0.5} \tag{5-2}$$

where:

Q	=	pipe flow, in cubic feet per second
A	=	cross-sectional area of pipe, in square feet
V	=	velocity of flow, in feet per second

n	=	Manning's coefficient of roughness of pipe
R	=	hydraulic radius equal to area divided by wetted perimeter, in feet
WP	=	wetted perimeter, in feet
S_f	=	friction slope of pipe, in feet per foot slope of energy grade line

Several general rules must be observed when designing storm sewer sections. When followed, they tend to alleviate or eliminate the common mistakes made in storm sewer design. These rules are as follows:

A. Select pipe size and slope so that the velocity of flow will increase progressively, or at least will not appreciably decrease, at inlets, bends, or other changes in geometry or configuration.

B. Do not discharge the contents of a larger pipe into a smaller one, even though the capacity of the smaller pipe may be greater due to steeper slope.

C. At changes in pipe size from a smaller to a larger pipe, match the soffits (inside top surface) of the two pipes at the same level rather than matching the flow lines (in situations with limiting slopes, match the 0.8 diameter point of each pipe).

D. During the design process, compare the pipe slope of a particular run to critical slope. If the slope of the pipe is greater than critical slope, the segment will likely operate under entrance control instead of the originally assumed normal flow. Conduit slope should be kept below critical slope if possible. This approach also reduces the possibility of hydraulic jumps.

5.3.2 Bernoulli Equation

The law of conservation of energy as expressed by the Bernoulli Equation is the basic principle most often used in hydraulics. Energy cannot be lost, thus in a hydraulic system the sum of all energies along a flow line is constant. The total energy in mathematical form is given in Equation 5-3.

$$E = y + \frac{V^2}{2g} + \frac{P}{\gamma} = \text{constant} \qquad (5\text{-}3)$$

where:

E	=	total energy head, in feet
y	=	depth of water, in feet
V	=	mean velocity, in feet per second
P	=	pressure at given location, in pounds per square foot
g	=	acceleration of gravity, 32.2 feet per second squared
γ	=	specific weight of water, in pounds per cubic foot

The principle states that the energy head at any cross section must equal that in any other downstream section plus the intervening losses. In open channels, the flow is primarily controlled by the gravitational action of the moving fluid, which overcomes the hydraulic energy losses. The following version of the Bernoulli Equation represents the hydraulic principles in open channel flow.

$$h = y + \frac{V^2}{2g} + Z \tag{5-4}$$

where:

H	=	total energy head, in feet
y	=	depth of water, in feet
V	=	mean velocity, in feet per second
Z	=	height above datum, in feet
g	=	acceleration of gravity, 32.2 feet per second squared

The total energy at point one is equal to the total energy at point two. The terms are defined as above and h_L is the total headloss between sections 1 and 2.

$$y_1 + Z_1 + \frac{V_1^2}{2g} = y_2 + Z_2 + \frac{V_2^2}{2g} + h_L \tag{5-5}$$

The Bernoulli Equation is rewritten for pressure or closed conduit flow. The terms are defined as above.

$$\frac{V_1^2}{2g} + \frac{P_1}{\gamma} + Z_1 = \frac{V_2^2}{2g} + \frac{P_2}{\gamma} + Z_2 + h_L \tag{5-6}$$

Figure 5-1 is a graphical representation of the energy in open channel flow and closed conduit flow. The following variables are presented in Figure 5-1.

H	=	total energy head, in feet
y	=	depth of water, in feet
$V^2/2g$	=	velocity head, in feet
EGL	=	energy grade line, in feet
S_o	=	slope of bottom, feet per foot
h_L	=	head loss (all types), in feet
V	=	mean velocity, in feet per second
Z	=	height above datum, in feet
HGL	=	hydraulic grade line, in feet
S_f	=	slope of EGL, in feet per foot
S_w	=	slope of HGL, in feet per foot

P/γ = pressure head, in feet

The sum of the pressure head, P/γ and the elevation head, y, is called the piezometric head. This is the height to which water would rise in a pipe with one of its ends inserted into an arbitrary point in the flow field. The line connecting points of piezometric measurements along the path of flow is called the hydraulic grade line.

$$HGL = \frac{P}{\gamma} + y \tag{5-7}$$

where:

HGL = hydraulic grade line, in feet
P/γ = pressure head, in feet
y = elevation head, in feet

The energy grade line is equal to the hydraulic grade line plus the velocity head, $V^2/2g$.

$$EGL = \frac{P}{\gamma} + y + \frac{V^2}{2g} \tag{5-8}$$

where:

EGL = energy grade line, in feet
P/γ = pressure head, in feet
y = elevation head, in feet
$V^2/2g$ = velocity head, in feet

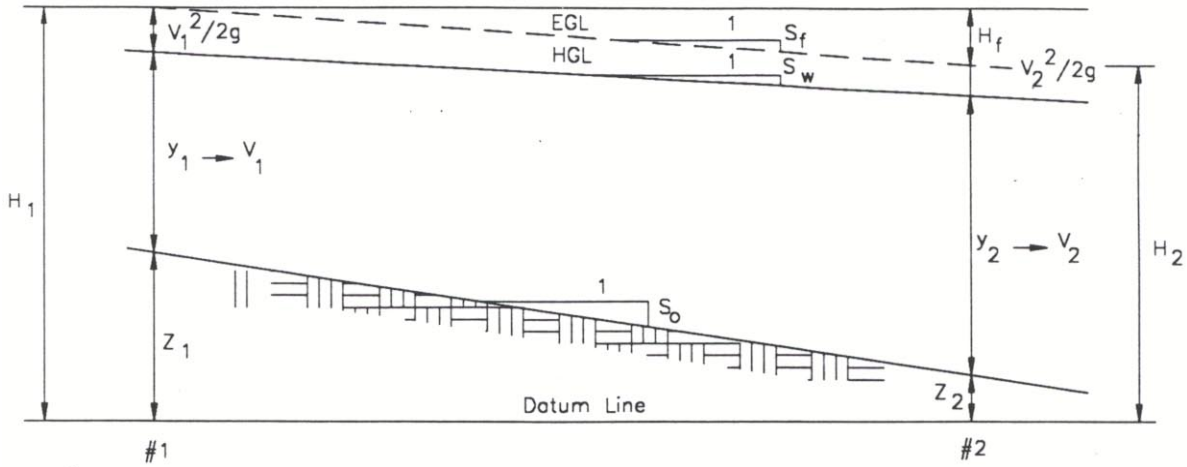

Energy in open-channel flow

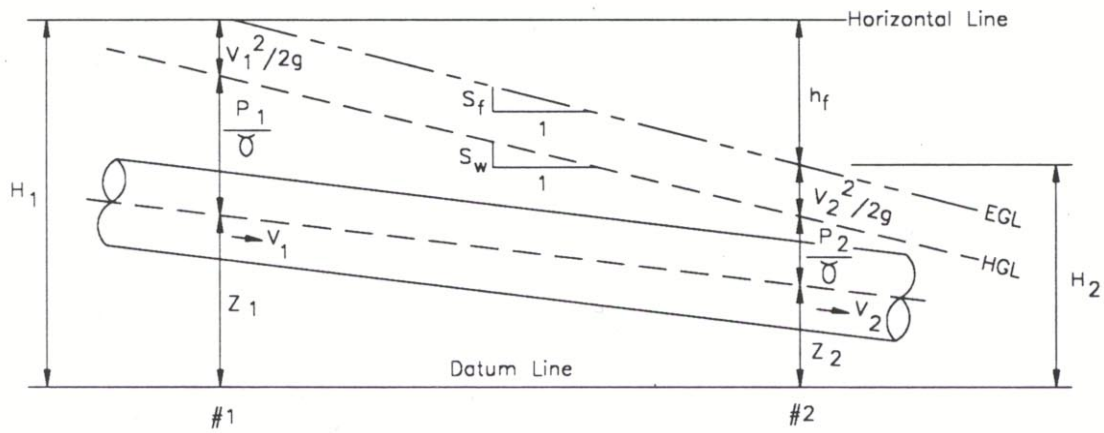

Energy in closed-conduit flow

Source: American Iron and Steel Institute. Modern Sewer Design.

Figure 5-1 Energy in Open-Channel Flow and Closed Conduit Flow

5.3.3 Critical Flow and Depth

Critical depth occurs in flow with a free surface and can be defined as (1) the depth at which, for a given energy content of the water in a conduit, maximum discharge occurs; or (2) the depth at which in a given conduit a given quantity of water flows with the minimum content of energy. Computation of the critical depth y_c can be accomplished in a trial-and-error manner to minimize energy E by using the nomograph in Figure 5-2 for determining critical depth in circular conduits. Uniform flow at critical depth will occur when the grade or slope of the conduit is nearly equal to the loss of head per foot resulting from flow at this depth.

5.4 ENERGY GRADIENT AND PROFILE OF STORM SEWERS

When using Bernoulli's Equation in the hydraulic design of storm sewers, designers must account for energy losses. These losses are commonly referred to as head losses, and are classified as either friction or minor losses. Friction losses are due to forces between the fluid and the boundary material, while minor losses are a result of the geometry of sewer appurtenances such as manholes, bends, and either an expanding or contracting transition. Minor losses can constitute a significant portion of the total head loss.

When storm sewer systems are designed for full flow, the design professional shall establish the head losses caused by flow resistance in the conduit, changes of momentum and interference at junctions and structures. This information is then used to establish the design water surface elevation at each structure.

It is not necessary to compute the energy grade line of a conduit section if all three of the following conditions are satisfied;

A. The slope(s) and the pipe size(s) are chosen so that the slope is equal to or greater than the friction slope.

B. The inside top surfaces (soffits) of successive pipes are lined up when changing sizes.

C. The water surface at the point of discharge will not rise above the top of the outlet.

In such cases, the pipe does not operate under pressure and the slope of the water surface under capacity discharge will approximately parallel the slope of the invert of the pipe, assuming the minor losses are reasonable (less than 10 percent). Minor or local losses are energy losses resulting from rapid changes in the direction or magnitude of the velocity. The term minor loss is appropriate for pipelines that include long reaches of uniform straight pipe. However, for short pipes, it is a misnomer, because the minor losses may be greater than the friction losses.

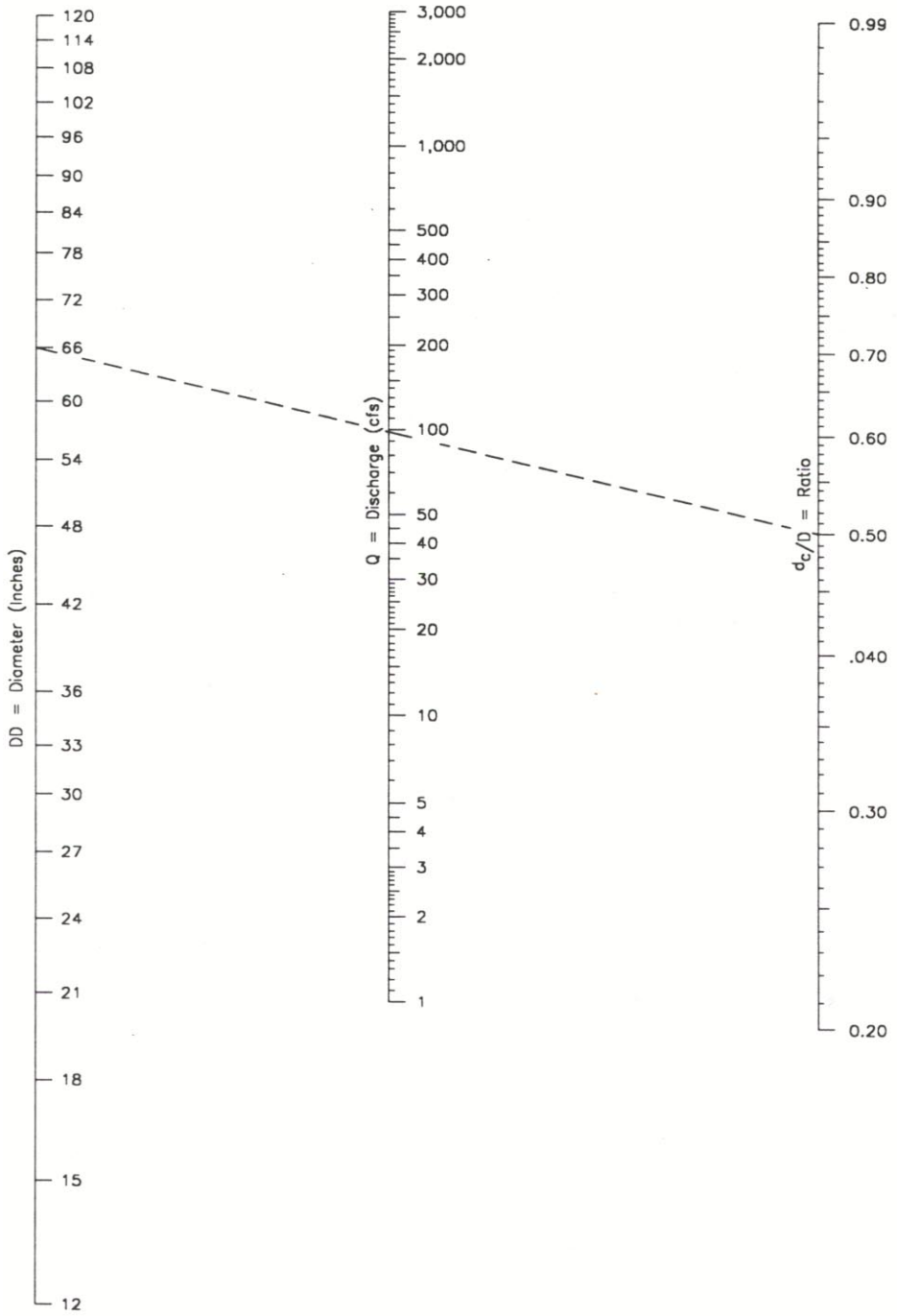

Source: Texas Highway Department.

Figure 5-2 Critical Depth for Circular Conduits

In the absence of these conditions or when it is desired to check the system against a larger storm event than that used in sizing the pipes, the hydraulic and energy grade lines shall be computed and plotted. Minor losses due to turbulence at structures shall be determined by the procedure described below. If the storm sewer system could be extended at some future date, present and future operation of the system must be considered.

The final hydraulic design of a system should be based on the procedures set forth in this Article. The conduits are treated as either open channel flow or full pipe flow, as the case may be. For open channel flow, the energy grade line is used as a base for calculation, while the hydraulic grade line is used for full pipe flow. The following procedure is applicable to storm sewers flowing with a free water surface, or open channel flow. The basic approach to the design of open channel flow in storm sewers is to calculate the energy grade line along the system. It is assumed that the energy grade line is parallel to the pipe grade and that any losses other than pipe friction may be accounted for by assuming point losses at each manhole.

5.4.1 Friction Head Loss

The pipe friction can be evaluated by modifying the Manning's Equation.

$$S_f = \left[\frac{Qn}{1.49AR^{0.67}} \right]^2 \tag{5-9}$$

where:

S_f	=	friction slope of pipe, in feet per foot
Q	=	pipe flow, in cubic feet per second
n	=	Manning's roughness coefficient
A	=	cross-sectional area of pipe, in square feet
R	=	hydraulic radius equal to area divided by wetted perimeter, in feet
WP	=	wetted perimeter, in feet

The pipe friction head loss is equal to the friction slope of the pipe multiplied by the pipe length.

$$h_f = S_f L \tag{5-10}$$

where:

h_f	=	pipe friction head loss, in feet
S_f	=	friction slope of pipe, in feet per foot
L	=	length of pipe, in feet

5.5 DESIGN PROCEDURE FOR STORM SEWER SYSTEMS

5.5.1 Preliminary Design

A. Prepare a drainage map of the entire area that will be impacted by proposed improvements. Contour maps serve as excellent drainage area maps when supplemented by field reconnaissance.

B. Make a preliminary layout of the proposed storm drainage system, locating all inlets, manholes, mains, laterals, ditches, culverts, outlet, etc.

C. Outline the drainage area for each inlet in accordance with present and future street development conditions.

D. Label each drainage area with an identification number, the size of area, and the direction of surface runoff by small arrows.

E. Show all existing underground utilities.

F. Establish design rainfall frequency for each storm of interest.

G. Establish inlet time of concentration for each point of interest.

H. Calculate flows at each point of interest for each storm of interest.

I. Establish the typical cross section of each street.

J. Establish permissible spread of water on all streets within the drainage area.

K. Determine the outlet location for the system and assess capacity and impact on the receiving feature (stream, existing storm sewer system, etc.).

L. Include Steps A through K with plans submitted for review. The submitted drainage map shall be suitable for permanent filing with the appropriate agency and shall be of reproducible copy quality.

5.5.2 Storm Sewer System

The stormwater runoff calculated to enter each inlet will be further conveyed by the proposed storm sewer system. This system must have the capacity to safely carry runoff from the whole contributing drainage area for the selected design storm to its discharge point/outfall.

The flow rate in the pipe at certain points of the storm system isn't necessarily the summation of all inflows from the contributing partial drainage areas at the same point. Varying times of concentration cause the hydrographs for other contributing areas to peak at different times.

Therefore, the methods that calculate only peak discharge, such as Rational Method, have a tendency to overestimate the size of the system, because they do not consider the peak timing. This does not negatively impact systems with smaller drainage areas (such as 200 acres), but the trunk systems draining larger areas should be sized utilizing flows generated by a method that utilizes hydrographs.

Determining Type of Flow

The type of flow in the system must be determined before treating conduits as open channels. This determination must be carried out by calculating the hydraulic grade line at the downstream end of the system and progressively proceeding upstream.

A. Discharge Point

The discharge point of the storm sewer usually establishes a starting point for the hydraulic calculations. If the discharge is submerged, as when the water level of the receiving water body is above the crown of the pipe, the exit loss should be added to the water level and calculations for head loss in the sewer should start from this point. If the hydraulic grade line is above the pipe crown at the next upstream manhole, full flow calculations should be used. If the hydraulic grade line is below the pipe crown at the upstream manhole, then open channel flow calculations must be used at the manhole.

When the discharge is not submerged, a flow depth must be determined at some control section to allow calculations to proceed upstream. If the tailwater depth is less than $(D + d_c)/2$, set the tailwater elevation equal to $(D + d_c)/2$, where D equals the pipe diameter, and d_c equals the critical depth, both in feet, otherwise use the tailwater depth. The hydraulic grade line is then projected to the upstream manhole. Full flow calculations may be utilized at the manhole if the hydraulic grade is above the pipe crown.

The assumption of straight hydraulic grade lines is not entirely correct, since backwater and drawdown exists, but should be accurate enough for the size of pipes usually considered for storm sewers. If additional accuracy is justified for large conduits with diameters larger than 48 inches or where the result will have a very significant effect on design, backwater and drawdown curves should be calculated.

B. Piped System

As outlined for the discharge point, at each manhole the same type of procedure must be repeated.

The water depth in each manhole must be calculated to verify that the water level is above the crown of all pipes. Whenever the level is below the crown of a pipe, open channel methods are acceptable.

Storm Sewer Pipe

When the initial energy gradient is established and the design discharge is determined, the Continuity and Manning's Equations (5-1 and 5-2) may be used to determine the pipe size and velocity.

Junctions, Inlets, and Manholes

A. Determine the invert elevations at the upstream and downstream end of the pipe section in question. The elevation of the invert of the upstream end of the pipe is equal to the elevation of the downstream end of the pipe (invert) plus the product of the length of the pipe and pipe gradient, S_o.

B. Determine the velocity of flow for the incoming pipe (main line) at the junction, inlet, or manhole at the design point.

C. Determine the velocity of flow for the outgoing pipe (main line) at the junction, inlet, or manhole at the design point.

D. Compute the velocity head (Equation 5-8) for the outgoing velocity (main line) at the junction, inlet, or manhole at the design point.

E. Compute the velocity head for the incoming velocity (main line) at the junction, inlet, or manhole at the design point.

F. Determine the head loss coefficient, k_m, at the junction, inlet, or manhole at the design point.

G. Compute the head loss at the junction, inlet or manhole. See Table 5-3, on the next page, for coefficients and use the incoming velocity unless otherwise specified.

$$h_j = k_m \left[\frac{V_2^2 - V_1^2}{2g} \right]$$

TABLE 5-3

COEFFICIENTS FOR MINOR LOSSES (k_m) IN STORM SEWER SYSTEMS	
Minor Loss Type	**k_m**
Terminal Loss (beginning structure)	1.0
Entrance Loss	0.5[1]
Incoming Opposing Flows	1.0[2]
Angled incoming pipes losses –	
Angle, in degrees	
15	0.19
30	0.35
45	0.47
60	0.56
75	0.64
90	0.70
[1] Assuming a square-edged entrance.	
[2] Identical flows entering perpendicular to the outflow. Use the combined outflow velocity.	

H. Compute energy gradient at the upstream end of the junction as if the junction were not there.

I. Add the head loss to the calculated energy gradient elevation to obtain the energy gradient elevation at upstream end of junction.

All information shall be recorded on the plans or in tabular form convenient for review.

Major Storm System

A major storm system is one which is located above a flood way. Check the proposed system for the 100-year storm event. Modify the proposed system or provide additional flow capacity as required to accommodate the major design storm according to the requirements stated in Section 2 Stormwater Runoff, Section 3 Street Drainage, and Section 4 Storm Inlets.

5.5.3 Inlet System

Determining the size and suitable location of inlets is largely a trial-and-error procedure. The guide to the preferred procedure is contained/summarized in the following steps:

A. Beginning at the upstream end of the project outlines a trial drainage area and calculate the runoff from it.

B. Compare the calculated runoff to allowable street capacity. If the calculated runoff is greater than the allowable street capacity, reduce the size of the trial area. If the calculated runoff is less than street capacity, increase the size of the trial area.

Repeat this procedure until the calculated runoff equals the allowable street capacity. This is the first point at which a portion of the flow must be removed from the street. The percentage of flow to be removed will depend on street capacity versus runoff entering the street downstream.

C. Record the drainage area, time of concentration, and calculated runoff for the area. This information shall be recorded on the plans or in tabular form convenient for review.

D. If an inlet is to be used to remove water from the street, size the inlet(s) and record the inlet size, amount of intercepted flow, and amount of flow carried over (bypassing the inlet).

E. Continue the above procedure for other areas until a complete system of inlets has been developed. Compare the time of concentration for the area to the time of concentration for the upstream contributing areas. Use the longer time of concentration to calculate the discharge at the inlet. Remember to account for carry-over flow from one inlet to the next. Add the carry-over flow to the calculated discharge to obtain the design discharge at the inlet. The difference between the design discharge and the inlet discharge is carry-over flow and is bypassed to the next downstream inlet.

F. After a complete system of inlets has been established, modifications should be made to accommodate special situations such as large runoff point sources, variation in street alignments and grades or areas not to be inundated (pedestrian crossings and ramps).

G. Record information from Steps C and D for all inlets.

H. After the inlets have been assigned a location and sized the inlet pipes can be designed. Inlet pipes, or connector pipes, convey runoff intercepted by the inlets to the storm sewer main line.

I. Inlet pipes are sized to carry the flow intercepted by the inlet. Inlet pipe capacity may be controlled by the available gradient or by pipe conditions at the inlet. Inlet pipe sizes should be determined for both inlet and outlet conditions and the larger size used in the design.

5.5.4 Storm Sewer Collection System Design by the Rational Method

The Rational Method is a commonly used method for storm sewer collection system design. Table 5-4 provides computational guidance for designing a storm sewer system by the Rational Method. Table 5-4 may also serve as a reference for submitting data and results output from a software program that may be used for the design. The minimum time of concentration acceptable in the

Rational Method is 5 minutes. Also refer to Charlotte-Mecklenburg Storm Water Design Manual (dated 1993) pages 3-11 through 3-15.

TABLE 5-4
GUIDANCE TABLE FOR DESIGNING A STORM SEWER SYSTEM WITH THE RATIONAL METHOD

#	Variable	Explanation
1	Location of Design Point	Determine the design point location.
2	Basins	List delineated basins contributing runoff to this point. Plans must be clearly delineated in submittal.
3	Length	Enter length of flow path between previous design point of contributing subbasins and design point under consideration.
4	Inlet Time	Determine the inlet time for the particular design point. For the first point on a system, the inlet time will be equal to the time of concentration. For subsequent design points, inlet time should also be tabulated to determine if it may be of greater magnitude than the accumulated time of concentration from upstream basins. If the inlet time exceeds the time of concentration from the upstream basin, the inlet time should be substituted for time of concentration and used for this and subsequent basins. See the Section 2 Stormwater Runoff of this Article to determine inlet time.
5	Flow Time - Street Flow	Enter the appropriate flow time between the upstream design points and the design point under consideration. The flow time on the street should be used if a significant portion of the flow from the above basin is carried in the street.
6	Flow Time - Pipe Flow	Pipe flow time should generally be used unless there is significant carry-over from above basins in the street.
7	Time of Concentration	The time of concentration is the summation of the previous design point time of concentration and the intervening flow time.
8	Coefficient 'C'	Rational Method Runoff Coefficient, "C", for the basins listed in Column 2 should be determined and listed. The "C" value should be weighted if the basins contain areas with different "C" values. Build-out conditions for upstream areas should be taken into consideration.

TABLE 5-4 continued

COMPUTATIONAL GUIDANCE FOR DESIGNING A STORM SEWER DESIGN WITH THE RATIONAL METHOD

#	Variable	Explanation
9	Intensity - "I"	The intensity to be applied to the basins under consideration is obtained from the time-intensity-frequency curve developed for the specific area under consideration based upon the depth-duration-frequency curves presented in Section 2 Stormwater Runoff. The intensity is determined from the time of concentration and the frequency of design.
10	Area - "A"	The area (in acres) of the basins listed in Column 2 is tabulated in this column. Subtract ponding areas which do not contribute to direct runoff such as rooftop and parking lot ponding areas.
11	Direct Runoff	Direct runoff from the tributary basins listed in Column 2 is calculated and tabulated in this column by multiplying Columns 8, 9, and 10 together.
12	Other Runoff	Runoff from other sources, such as controlled releases from rooftops, parking lots, base flows from groundwater, and any other source, are identified in this column.
13	Total Runoff	The total of runoff from the previous design point summation plus the incremental runoff listed in Columns 11 and 12 is identified in this column.
14	Street Longitudinal Slope in Percent	The proposed street slope is listed in this column.
15	Allowable Capacity in the Street	The allowable capacity for the street is entered in this column. Allowable capacities should be calculated in accordance with procedures set forth in Section 3 Street Drainage.
16	Pipe Slope in Percent	Enter the proposed pipe grade.
17	Pipe Size in Inches	Enter the required pipe size to convey the quantity of flow necessary in the pipe.
18	Pipe Capacity	Enter the capacity of the pipe flowing full with the slope expressed in Column 16.
19	Street Design	Tabulate the quantity of flow to be carried in the street.
20	Street Velocity	Enter the actual velocity of flow for the volume of runoff to be carried in the street.

TABLE 5-4 continued
COMPUTATIONAL GUIDANCE FOR DESIGNING A STORM SEWER DESIGN WITH THE RATIONAL METHOD

#	Variable	Explanation
21	Pipe Design	Enter the quantity of flow determined to be carried in the pipe.
22	Pipe Velocity	Tabulate the actual velocity of flow in the pipe for the design Q.
23	Remarks	Include any remarks or comments, which may affect or explain the design. When routing the 100 year design storm through the system, required elevations for adjacent buildings must be listed in this column.

SECTION 6
OPEN CHANNELS

Page

Page

LIST OF TABLES

LIST OF FIGURES

This Page Intentionally Left Blank

6.1 INTRODUCTION

Open channels designed for use in drainage systems have significant cost and capacity advantages. Open channels may be used for recreational and aesthetic purposes, habitat improvement, in-stream storage, and groundwater recharge. Challenges for their use in a public drainage system include potential right-of-way constraints and maintenance costs. Careful planning and design are required to increase the benefits and minimize the challenges.

The ideal open channel is a stabilized watercourse developed by nature over time, characterized by a stable bed and banks. The benefits of such a channel are:

A. Adequate channel storage can decrease downstream peak flows.

B. The maintenance needs of properly stabilized channels are minimal.

C. Flow volumes in the public drainage system may be reduced by natural subsurface infiltration.

D. The disturbance of native vegetation and wildlife is minimized.

E. The channel can provide a desirable green belt that can be used as a recreational area adding significant social benefits.

A stabilized natural channel, or the artificial, man-made channel which most nearly conforms to the character of a stabilized natural channel, is the most preferable design option.

Channel stability, particularly in unprotected alluvial materials, is a problem in urban hydrology because of the significant difference between low flow and peak storm runoff rates. A natural channel must be studied in sufficient detail to determine the measures needed to mitigate potential bottom scour and bank degradation. Proactive erosion control measures should be applied at reasonable cost to preserve the natural appearance without sacrificing hydraulic efficiency. This section provides the criteria and methodology for open channel design.

6.2 DESIGN CRITERIA

6.2.1 Design Frequency

Open channels shall be designed in a manner such that the water surface elevation resulting from the 100-year storm event is at least 2 feet below the lowest finished floor elevation of any existing residential dwelling or public, commercial and industrial building unless the building is flood-proofed. Open channels constructed to convey only stormwater flow for a short period of time shall be designed to convey flow generated by the 10-year design storm event under bank full conditions. Bank full conditions exist when flow is conveyed within the main area of a channel without overtopping the channel bank. Intermittent and perennial stream designs, which convey base flow entirely or partly throughout the year such as blue line stream indicated on United States Geological

Survey topography mapping or Natural Resource Conservation Service (NRCS) soil mapping, shall refer to natural stream design criteria for proper design techniques and construction.

6.2.2 Maintenance Easement

A protected maintenance access corridor shall be provided and recorded along all newly constructed channels. This access corridor shall provide a minimum access width of 20 feet from the channel bank on each side unless otherwise approved by the City of Concord (City). For some small channels, a maintenance corridor may only be required on one side. These restricted maintenance corridors shall be sufficient to allow access by maintenance equipment.

6.3 TYPES OF CHANNELS

Channels are defined as natural or artificial. Natural channels include all watercourses that have developed over time by natural processes. Artificial channels are those constructed or significantly altered by human effort and include roadside ditches and vegetative-lined or improved channels.

6.3.1 Natural Channels

Many natural channels have mild slopes, are reasonably stable, and are not in a state of serious degradation or aggradation. However, if a natural channel is to be used as a drainage feature for storm runoff from an urbanizing area, the altered flow regime resulting from the increase in impervious area may cause scour and erosion. Hydraulic analyses must be performed to identify the erosion tendencies in natural channels. Some on-site modification of the natural channel may be required to assure a stabilized condition. State and Federal regulations may dictate the actions needed to be taken in natural channels where erosion and scouring either is or may occur after development.

The investigation necessary to assure adequate capacity of the natural channel is unique for every channel. The design professional must prepare cross sections of the channel, define the water surface profile for the minor and major design storm, investigate the bed and bank material to determine erosion tendencies, and study the bank slope stability of the channel under design flow conditions. Supercritical flow does not normally occur in natural channels, but calculations must be performed to ensure that this condition will not occur.

6.3.2 Vegetative-Lined Channels

Vegetative-lined channels are the most desirable of the artificial channel types. Vegetation will stabilize the body of the channel, consolidate the soil mass of the bed, reduce erosion on the channel surface, and control the movement of soil particles along the channel bottom. Channel storage, lower velocities, and the vegetative multiple-use benefits create significant advantages over other artificial channels.

The vegetated channel lining creates turbulence, which reduces hydraulic energy and flow velocity. Therefore, the design professional must give full consideration to sediment deposition and scour, as well as hydraulics.

6.3.3 Concrete-Lined Channels

Concrete channel design shall only be allowed upon approval by the City, when project constraints dictate its use.

Concrete linings must be designed to withstand the various forces and actions that tend to overtop the bank lining, deteriorate the lining, erode the soil beneath the lining, and erode unlined areas. Maintenance needs should be included in any drainage plan utilizing concrete-lined channels.

6.3.4 Rock-Lined Channels

Rock-lined channels are constructed from ordinary riprap or wire enclosed riprap (gabions). The rock lining increases turbulence in the flow resulting in a loss of hydraulic energy and reduced flow velocities. The rock lining also permits a higher design velocity, and therefore, a steeper design slope than vegetative-lined channels. Rock linings are also used for erosion control at culvert/storm drain outlets, at sharp channel bends, at channel confluences, and at locally steepened channel sections. Correct sizing and material placement are essential to good performance. Incorrectly designed rock-lined channels can result in excessive maintenance requirements. The use of undersized stone for riprap can lead to washouts of the placed stone, whereas the use of oversized placed stone may contribute to localized scouring and erosion. In either situation, corrective maintenance would be required to stabilize the channel surface. Maintenance needs should be included in any drainage plan utilizing rock-lined channels.

Channels designed with riprap or gabion linings shall only be allowed upon approval by the City, when project constraints dictate their use. The use of riprap for permanent erosion control is permitted only if the site is unsuitable for vegetative lined channels. Rock-lined channels consisting of grouted riprap will not be permitted for use in the City.

6.3.5 Bioengineered Channels

Bioengineering may be utilized for channel slope stabilization where feasible. Adequate water supply must be available during the growing season to keep the vegetation viable.

Bioengineered slopes typically include 6- to 12-inch soil lifts/layers wrapped by biodegradable matting material. Deeply rooted vegetation is placed between the soil layers to create stability. Appropriate methodology documentation by a qualified, experienced bioengineering design professional must be provide for these channels.

6.4 CHANNEL DISCHARGE

Designing a stable channel under dynamic channel conditions requires an understanding of sediment transport and stream channel response. For example, unlined channels must be designed to

minimize excessive scour while lined channels must be designed to prevent deposition of sediments. Unlined channels are most successful when designed under the concept of dynamic equilibrium.

All variables used in fluid mechanics and hydraulics fall into one of three classes: those describing the boundary geometry, flow, and fluid. Various combinations of these variables define parameters that describe the state of flow in open channels.

6.4.1 Manning's Equation

Careful attention must be given to the design of drainage channels to provide adequate capacity and allow for minimum maintenance. The hydraulic characteristics of open channels shall be determined by using Manning's Equation, commonly expressed as:

$$V = \frac{1.49}{n} R^{0.67} S_f^{0.5} \qquad (6\text{-}1)$$

where:

V	=	average velocity, in feet per second
R	=	hydraulic radius of channel, A/WP, in feet
S_f	=	slope of the energy gradient, in feet per foot
n	=	Manning's coefficient of channel roughness
WP	=	wetted perimeter of channel wetted by water, in feet
A	=	cross sectional area of channel flow, in square feet

6.4.2 Uniform Flow

Manning's Equation is an accurate representation of flow conditions only when the rate of flow and channel characteristics (roughness, cross section geometry and slope) remain relatively constant, hence, uniform flow. For a channel of given roughness, discharge and slope, there is only one possible depth for maintaining a uniform flow. This depth is commonly expressed as the normal depth. The corresponding discharge is expressed as the normal discharge. Under uniform flow conditions, the water surface profile is parallel to both the energy grade line and the bottom of the channel.

Uniform flow is most often considered a theoretical abstraction. A channel is commonly designed on the assumption it will convey uniform flow at normal depth, but this is difficult, if not impossible, to achieve under non-laboratory conditions. The actual flow depth can differ appreciably from the normal flow depth.

Normal depth computations are made so frequently that it is convenient to use nomographs for various types of open channel cross sections to eliminate the need for trial-and-error solutions. A nomograph for estimating uniform flow for trapezoidal channels is shown in Figure 6-1, on page 6-7.

6.4.3 Critical Flow

Flowing water contains potential and kinetic energy. The relative values of the potential and kinetic energy are important in the analysis of open channel flow. The potential energy is represented by the depth of water plus the elevation of the channel bottom above a datum. The kinetic energy is represented by the velocity head, $V^2/2g$. The specific energy or head is equal to the depth of water plus the velocity head. In this case, the datum is taken as the flow line of the channel.

$$H = d + \frac{V^2}{2g} \tag{6-2}$$

where:

H	=	specific energy head, in feet
d	=	depth of flow, in feet
V	=	average channel flow velocity, in feet per second
g	=	acceleration of gravity, 32.2 feet per second squared

When depth of flow is plotted against specific energy for a given channel discharge at a section, the resulting curve shows that, at a given specific energy, there are two possible flow depths (see Figure 6-2, on page 6-8). At minimum energy, only one depth of flow exists. This is known as the critical depth.

The effect of gravity upon the state of flow is represented by a ratio of the inertial forces to gravity forces. This ratio is known as the Froude Number, Fr, and is used to categorize the flow. Determination of the point of critical flow is very necessary to ensure that a channel design is stable. This is especially important in natural or vegetative lined channels where inappropriate velocity can lead to bank instability problems.

The critical state of flow through an open channel is characterized by several important conditions. Condition E is valid only for rectangular channel geometry.

A. The specific energy is a minimum for a given discharge.

B. The discharge is a maximum for a given specific energy.

C. The specific force is a minimum for a given discharge.

D. The Froude Number is equal to 1.0.

E. The velocity head is equal to half the hydraulic depth in a channel of small slope.

If the critical state of flow exists throughout an entire reach, the channel flow is critical and the channel slope is at critical slope, S_c. A flow at or near the critical state is unstable, because minor changes in specific energy, such as from channel debris, can cause a major change in depth.

In the analysis of non-rectangular channels, the Froude Number equation is rewritten below. The hydraulic mean depth of flow is defined as the cross sectional area divided by the top width. Equation 6-3 can also be used in a trial and error approach to solve for critical depth of non-rectangular. Simply set the Froude Number to one, assume a depth, and solve till both sides equate.

$$Fr = \left[\frac{Q^2T}{gA^3}\right]^{0.5} \tag{6-3}$$

where:

Fr	=	Froude Number
Q	=	discharge in channel, in cubic feet per second
T	=	top width of channel, in feet
g	=	acceleration of gravity, 32.2 per second squared
A	=	cross-sectional area, in square feet

Critical depth for rectangular sections is defined by the following relationship.

$$d_c = \frac{V^2}{g} \tag{6-4}$$

where:

d_c	=	critical depth, in feet
V	=	average channel flow velocity, in feet per second
g	=	acceleration of gravity, 32.2 feet per second squared

The Froude Number, among its many definitions, defines the relationship between inertial and gravitational forces of a discharge for a specific channel. The ratio of this relationship with respect to 1 also indicates its flow regime. A Froude Number of 1 represents critical flow. If the Froude Number is greater than 1, the flow is supercritical, but when the Froude Number is less than 1, the flow is subcritical. Supercritical is characterized by higher velocities and shallower depths. These characteristics present the potential for erosive conditions that would require more protective channel lining. Subcritical flow is characterized by lower velocities but higher depths; subcritical flow is more typical of natural and artificial watercourses.

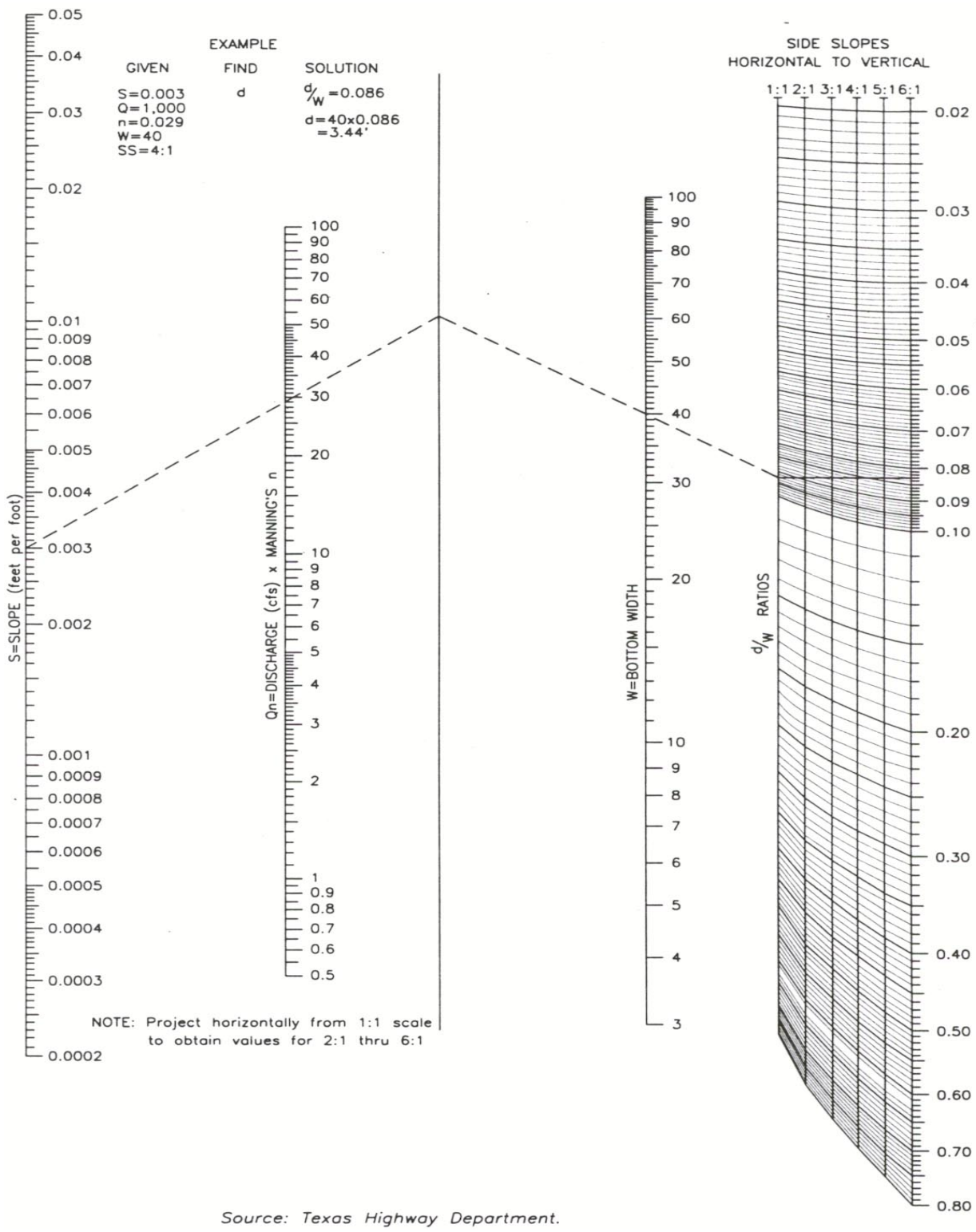

Source: Texas Highway Department.

Figure 6-1 Uniform Flow for Trapezoidal Channels

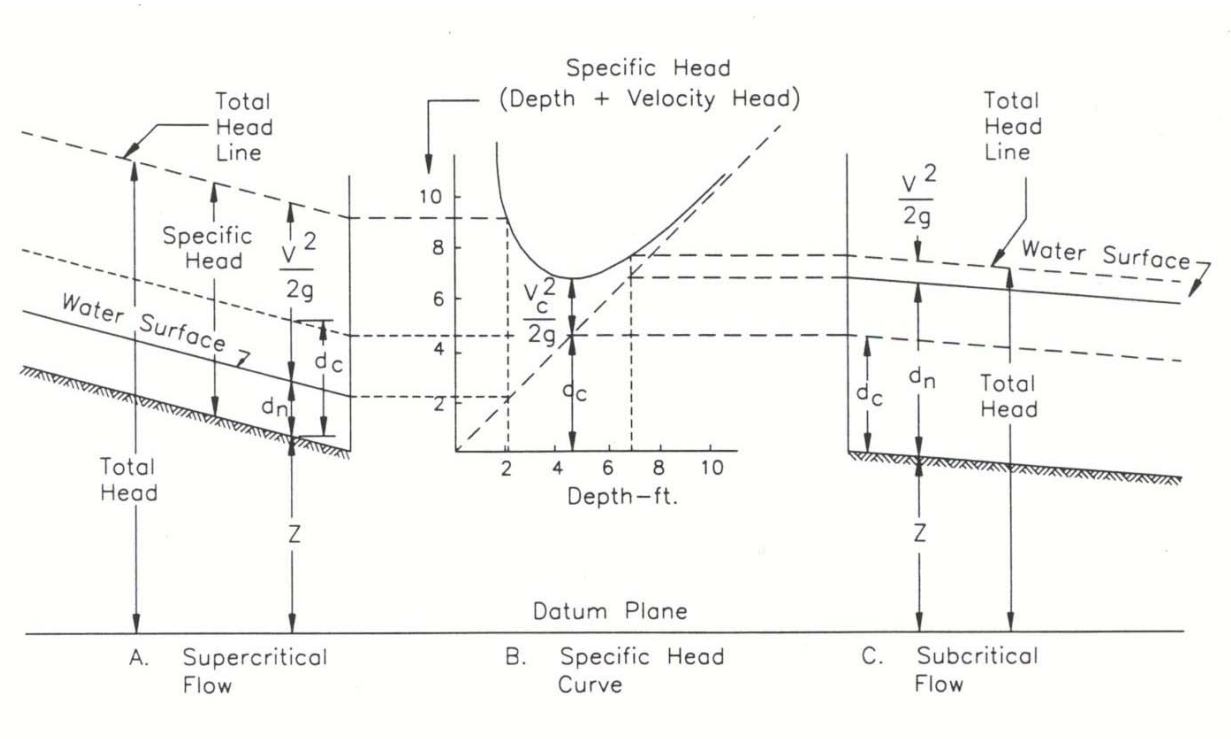

Source: Federal Highway Administration, HDS No. 3 *Design Charts for Open Channel*

Figure 6-2 Definition Sketch of Specific Head

6.4.4 Gradually Varied Flow

Gradually varied flow is used to describe a type of steady non-uniform flow. The change in the depth and velocity occur gradually over a considerable length of channel and the non-uniformity of the flow is not pronounced. The most common occurrence of gradually varied flow in storm drainage is the backwater created by culverts, storm drain inlets, or channel constrictions. For these conditions, the flow depth will be greater than normal depth in the channel and the water surface profile must be computed using backwater techniques. Backwater calculations can be tedious and iterative for some methodologies. Section 6.7 Water Surface Profile Analysis offers some guidance in selecting software for performing these calculations. Guidance for performing these calculations manually is available in Chapter 4 of the Charlotte-Mecklenburg County Storm Water Design Manual.

6.4.5 Rapidly Varied Flow

Rapidly varied flow is characterized by very pronounced curvature of the streamlines. The change in curvature may become so abrupt that the flow profile is virtually broken, resulting in a state of high turbulence. Several mathematical solutions exist for some cases of rapidly varied flow. Design professionals generally rely on empirical solutions of specific problems. The two cases of rapidly varied flow (weir flow and the hydraulic jump) that occur commonly in storm drainage will be discussed in this section.

Weir Flow

Weir calculations are commonly used for spillway outlets in detention ponds. Weirs can also be used for flow measurement, flow diversion, and energy dissipation. The general form of the equation for horizontal crested weirs is in Section 8 Hydraulics of Detention.

Hydraulic Jump

In urban hydraulics, a hydraulic jump may occur at grade changes, grade control structures (i.e., check drops), or at the outlet of an emergency spillway for detention ponds. The evaluation of hydraulic jumps is important since there are associated losses of energy and erosive forces. For hard-lined facilities such as concrete channels, the forces and the change in energy can affect the structural stability or the hydraulic capacity. For vegetative-lined channels, the erosive forces must be controlled to prevent serious damage. Control is usually obtained by check drops or grade control structures which confine the erosive forces to a protected area.

The jump can be adequately defined for box culverts/drains and for spillways using the jump characteristics of rectangular sections. The approximate jump location can be determined by intersecting the energy grade line of the supercritical and subcritical flow reaches. The primary concerns are: (1) if the channel is designed adequately to withstand the forces which may cause localized scouring or damage to the channel, and (2) if the jump will affect the hydraulic characteristics. The effect on capacity can be determined by evaluating the energy grade line taking into account the energy lost by the jump. In general, for a Froude Number less than 2.0, the loss of energy is less than 10 percent. These calculations must be included with the required submittals.

6.5 DESIGN CONSIDERATIONS

Typical channel cross sections are rectangular, trapezoidal, triangular, and parabolic in shape. A triangular channel is a special type of trapezoidal section with a bottom width of zero. Due to the difficulty of maintenance, their application is generally not feasible. Trapezoidal channels of varying bottom widths and side slopes are the most commonly constructed channels. Parabolic channels typically occur over time as corners fill in and bottoms stabilize. Formulas used in channel size design for typical cross section geometrics are presented in Table 6-1, on the next page.

Artificial open channels are commonly designed to have trapezoidal sections of adequate cross sections to incorporate ease of maintenance, uncertainties in runoff estimates, differences in channel roughness coefficients, channel obstructions, and sediment accumulations. These designs tend to incorporated trickle channels for periods of low flow as well. The channel configurations may be dictated by right-of-way constraints and where hard-lined channels are required. State and Federal regulations can also dictate the type of channel and lining.

TABLE 6-1
GEOMETRIC ELEMENTS OF CHANNEL SECTIONS

Section	Area A	Wetted Perimeter WP	Hydraulic Radius R	Top Width T
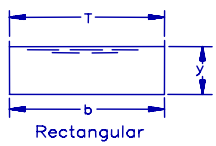	by	$b+2y$	$\frac{by}{b+2y}$	b
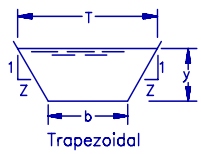	$by+Zy^2$	$b+2y\sqrt{Z^2+1}$	$\frac{by+Zy^2}{b+2y\sqrt{Z^2+1}}$	$b+2Zy$
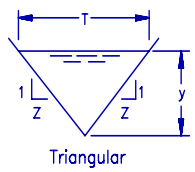	Zy^2	$2y\sqrt{Z^2+1}$	$\frac{Zy}{2\sqrt{Z^2+1}}$	$2Zy$
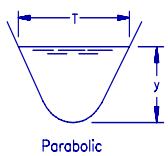	$\frac{2}{3}Ty$	$T+\frac{8y^2}{3T}$	$\frac{2T^2y}{3T^2+8y^2}$	$\frac{3A}{2y}$

Source: Chow, Ven Te, 1959; Open-Channel Hydraulics

Determination of a representative Manning's "n" value is critical in the analysis of the hydraulic characteristics of an open channel. The "n" value for each channel reach should be based on the individual channel characteristics. Typical minimum, normal, and maximum roughness coefficients for various types of open channels are presented in Table 6-2, on the next page. Table 6-3, on page 6-14, presents a variable "n" value dependent on the depth of flow in the channel. Experience and judgment should also be used in selecting the proper "n" value for a channel. When working with a detailed hydraulic analyses "n" values should be calibrated, whenever possible, to compare the calculated with known water surface conditions.

TABLE 6-2

TYPICAL ROUGHNESS COEFFICIENTS ("n") FOR OPEN CHANNELS

Type of Channel and Description	Minimum	Normal	Maximum
Excavated or Dredged			
a. Earth, straight and uniform:			
1. Clean, recently constructed	0.016	0.018	0.020
2. Clean, after weathering	0.018	0.022	0.025
3. Gravel, uniform section, clean	0.022	0.025	0.030
4. With short grass, few weeds	0.022	0.027	0.033
b. Earth, winding and sluggish:			
1. No vegetation	0.023	0.025	0.030
2. Grass, some weeds	0.025	0.030	0.033
3. Dense weeds or aquatic plants in deep channels	0.030	0.035	0.040
4. Earth bottom and rubble sides	0.028	0.030	0.035
5. Stony bottom and weedy banks	0.025	0.035	0.040
6. Cobble bottom and clean sides	0.030	0.040	0.050
c. Dragline-excavated or dredged:			
1. No vegetation	0.025	0.028	0.033
2. Light brush on banks	0.035	0.050	0.060
d. Rock cuts:			
1. Smooth and uniform	0.025	0.035	0.040
2. Jagged and irregular	0.035	0.040	0.050
e. Channels not maintained, weeds and brush uncut:			
1. Dense weeds, high as flow depth	0.050	0.080	0.120
2. Clean bottom, brush on sides	0.040	0.050	0.080
3. Same, highest stage of flow	0.045	0.070	0.110
4. Dense brush, high stage	0.080	0.100	0.140
Natural Streams - Minor streams (top width at flood stage < 100 feet)			
a. Streams on plain			
1. Clean, straight, full stage, no rifts or deep pools	0.025	0.030	0.033
2. Same as above, but more stones and weeds	0.030	0.035	0.040
3. Clean, winding, some pools and shoals	0.033	0.040	0.045
4. Same as above, but some weeds and stones	0.035	0.045	0.050
5. Same as above, lower stages, more ineffective slopes and sections	0.040	0.048	0.055
6. Same as 4, but more stones	0.045	0.050	0.060
7. Sluggish reaches, weedy, deep pools	0.050	0.070	0.080
8. Very weedy reaches, deep pools, or floodways with heavy stand of timber and underbrush	0.075	0.100	0.150

TABLE 6-2 (Continued)
TYPICAL ROUGHNESS COEFFICIENTS ("n") FOR OPEN CHANNELS

Type of Channel and Description	Minimum	Normal	Maximum
Lined or Built-Up Channels			
a. Corrugated Metal	0.021	0.025	0.030
b. Concrete:			
1. Trowel finish	0.011	0.013	0.015
2. Float finish	0.013	0.015	0.016
3. Finished, with gravel on bottom	0.015	0.017	0.020
4. Unfinished	0.014	0.017	0.020
5. Gunite, good section	0.016	0.019	0.023
6. Gunite, wavy section	0.018	0.022	0.025
7. On good excavated rock	0.017	0.020	
8. On irregular excavated rock	0.022	0.027	
c. Concrete bottom, float finished with sides of:			
1. Dressed stone in mortar	0.015	0.017	0.020
2. Random stone in mortar	0.017	0.020	0.024
3. Cement rubble masonry, plastered	0.016	0.020	0.024
4. Cement rubble masonry	0.020	0.025	0.030
5. Dry rubble or riprap	0.020	0.030	0.035
d. Gravel bottom with sides of:			
1. Formed concrete	0.017	0.020	0.025
2. Random stone in mortar	0.020	0.023	0.026
3. Dry rubble or riprap	0.023	0.033	0.036
e. Asphalt:			
1. Smooth	0.013	0.013	
2. Rough	0.016	0.016	
f. Rock-lined:			
1. Riprap	0.023	0.033	0.036
2. Grouted riprap	0.020	0.023	0.026
3. Gabions	0.025		0.033

Source: Chow, Ven Te, 1959; Open-Channel Hydraulics.

TABLE 6-3
MANNING'S ROUGHNESS COEFFICIENTS ("n") FOR STRAIGHT CHANNELS WITHOUT SHRUBBERY OR TREES

Grass Condition	Depth of Flow of 0.7 to 1.5 feet	Depth of Flow greater than 3.0 feet
Bermudagrass, Buffalograss, Kentucky Bluegrass:		
a. Mowed to 2 inches	0.035	0.030
b. Length 4 to 6 inches	0.040	0.030
Good stand, any grass:		
a. Length of 12 inches	0.070	0.035
b. Length of 24 inches	0.100	0.035
Fair stand, any grass:		
a. Length of 12 inches	0.060	0.035
b. Length of 24 inches	0.070	0.035

A Manning's roughness coefficient is used in the design of every channel, no matter what type of natural or man-made lining is used, even if no lining is used. This value and a description of how this value is to be maintained must be included in the maintenance requirements.

If the channel is grass-lined, the frequency and height of grass after mowing should be specified. If the channel and floodplain is composed of grass, brush, and small trees, then the frequency, type of maintenance, and height after maintenance should be specified.

Where applicable, unlined open channels of a given soil type should have sufficient gradient to provide self-cleaning flow velocities but not be so great as to create excessive erosion. Maximum permissible design flow velocities for earth channels are presented in Table 6-4, on page 6-15. Table 6-5, on page 6-16, presents maximum permissible velocities for earth channels with varied grass linings and sloping configurations. Lined channels, drop structures, check dams, or concrete spillways may be required to control erosion that results from high channel flow velocities. Overall, the design of open channels, including stable, alluvial channel systems, is tied closely to the criteria for erosion and sediment control.

TABLE 6-4
MAXIMUM PERMISSIBLE DESIGN OPEN CHANNEL FLOW VELOCITIES IN EARTH*

Soil Types	Permissible Mean Channel Velocity (feet per second)
Fine Sand (noncolloidal)	2.0
Coarse Sand (noncolloidal)	4.0
Sandy Loam (noncolloidal)	2.5
Silt Loam (noncolloidal)	3.0
Ordinary Firm Loam	3.5
Silty Clay	3.5
Fine Gravel	5.0
Stiff Clay (very colloidal)	5.0
Graded, Loam to Cobbles (noncolloidal)	5.0
Graded, Silt to Cobbles (colloidal)	5.5
Alluvial Silts (noncolloidal)	3.5
Alluvial Silts (colloidal)	5.0
Coarse Gravel (noncolloidal)	6.0
Cobbles and Shingles	5.5
Hard Shales and Hard Pans	6.0
Soft Shales	3.5
Soft Sandstone	8.0
Sound rock (igneous or hard metamorphic)	20.0

* These velocities shall be used in conjunction with scour calculations and as approved by the City Engineer.

Source: Chow, Ven Te, 1959: Open Channel Hydraulics.

TABLE 6-5
MAXIMUM PERMISSIBLE VELOCITIES[1] IN VEGETATIVE-LINED CHANNELS

Channel Slope (%)	Soil Characteristics	Vegetative Lining[2]	Permissible Velocity[3] (feet per second)
0-5	Easily Erodible Non-plastic (Sands and Silts)	Bermuda grass	5.0
		Tall fescue	4.5
		Bahia grass	4.5
		Kentucky bluegrass	4.5
		Grass-legume mixture	3.5
	Erosion Resistant Plastic (Clay mixes)	Bermuda grass	6.0
		Tall fescue	5.5
		Bahia grass	5.5
		Kentucky bluegrass	5.5
		Grass-legume mixture	4.5
5-10	Easily Erodible Non-plastic (Sands and Silts)	Bermuda grass	4.5
		Tall fescue	4.0
		Bahia grass	4.0
		Kentucky bluegrass	4.0
		Grass-legume mixture	3.0
	Erosion Resistant Plastic (Clay mixes)	Bermuda grass	5.5
		Tall fescue	5.0
		Bahia grass	5.0
		Kentucky bluegrass	5.0
		Grass-legume mixture	3.5
10-15	Easily Erodible Non-plastic (Sands and Silts)	Bermuda grass	3.5
		Tall fescue	2.5
		Bahia grass	2.5
		Kentucky bluegrass	2.5
	Erosion Resistant Plastic (Clay mixes)	Bermuda grass	4.5
		Tall fescue	3.5
		Bahia grass	3.5
		Kentucky bluegrass	3.5

Source: USDA-NRCS Modified
[1] Permissible velocity based on 10-year design storm peak runoff.
[2] Soil erodibility based on resistance to soil movement from concentrated flowing water.
[3] Before grass is established, permissible velocity is determined by the type of temporary liner used.

6.6 DESIGN STANDARDS

The design standards for open channels cannot be presented in a step-by-step fashion because of the wide range of options available to the design professional. Certain planning and conceptual criteria are particularly useful in the preliminary design of a channel. These criteria, which have the greatest effect on the performance and cost of the channel, are discussed below. Design submittals shall be in a clear and concise format convenient for review and shall include, but not be limited to, (1) storm runoff computations and mapping, (2) hydraulic design computations, assumptions, references, sketches and drawings, (3) floodplain mapping, (4) and all other pertinent data.

6.6.1 Natural Channels

The design criteria and evaluation techniques for natural channels are:

A. The channel and areas above the bankfull elevation (floodplain), shall have adequate capacity for major storm runoff.

B. Natural channel segments with a Froude Number greater than 0.95 for any flow shall be protected from erosion.

C. The water surface profiles shall be defined so that the major storm floodplain can be mapped.

D. Filling of the flood fringe reduces valuable floodplain storage capacity and tends to increase downstream runoff peaks. Filling of the flood fringe is subject to the restriction of floodplain regulations.

E. Roughness factors "n" that are representative of inadequately maintained or "in need of maintenance" conditions shall be used for the analysis of water surface profiles.

F. Roughness factors "n" that are representative of maintained channel conditions shall be used to determine velocity limitations.

G. Erosion control structures, such as riprap, check drops, or check dams, may be required to control flow velocities, including the initial storm runoff.

H. Plan and profile drawings of the major storm floodplain, including flooding limits, shall be prepared. Appropriate allowances for future bridges or culverts, which can raise the water surface profile and cause the floodplain to be extended, shall be included in the analysis.

With most natural waterways, grade control structures should be constructed at regular intervals to decrease slope and control erosion. However, these channels should be left in as near natural condition as possible. For that reason, extensive modifications should not be undertaken unless they are found to be necessary to avoid excessive erosion with subsequent deposition downstream.

The usual rules of freeboard depth (the difference between the water surface for the design storm flow and the top of the constructed bank), curvature, and other guidelines applicable to artificial channels do not necessarily apply to natural channels. There are significant advantages that may occur if the design professional incorporates into his/her planning the overtopping of the channel and localized flooding of adjacent areas that are laid out and developed for the purpose of being inundated during the major storm runoff. Freeboard can be used to gauge the adequacy of a natural channel for future changes in runoff.

6.6.2 Vegetative-Lined Channels

Key parameters in vegetative-lined channel design include velocity, slope, roughness, depth, freeboard, curvature, cross section shape, and lining material. Other factors such as water surface profile computation, erosion control, drop structures, and transitions also play an important role. A discussion of these parameters is presented below.

A. Flow Velocity and Capacity

The maximum normal depth velocity should not exceed 5 feet per second for grass-lined channels. The Froude Number (turbulence factor) shall be less than 0.8 for grass-lined channels. Grass-lined channels having a Froude Number greater than 0.8 are not permitted. The minimum velocity should be greater than 2 feet per second for self-cleansing.

B. Longitudinal Channel Slopes

Vegetative-lined channels normally have slopes of 0.2 to 0.5 percent. Where the natural topography is steeper than desirable, drop structures should be utilized to maintain design velocities.

C. Freeboard for Drainage Ways

Except where localized overflow is desirable for additional ponding benefits or other reasons, the freeboard can be calculated with the following equation:

$$H_{FB} = 1.0 + \frac{V^2}{2g} \qquad (6\text{-}9)$$

where:

H_{FB}	=	freeboard height, in feet
V	=	average channel flow velocity, in feet per second
g	=	acceleration of gravity, 32.2 feet per second squared

The minimum freeboard should be 1-foot above the computed water surface elevation. Freeboard should not be obtained by the construction of levees.

An approximation of the superelevation of the water surface at a curve for a trapezoidal channel can be obtained from the following equation:

$$h = \frac{V^2 T}{g r_c} \tag{6-10}$$

where:

h	=	superelevation, in feet
V	=	average channel flow velocity, in feet per second
T	=	top width of channel, in feet
g	=	acceleration of gravity, 32.2 feet per second squared
r_c	=	centerline radius of curvature, in feet

The freeboard shall be measured above the superelevated water surface.

D. Curvature

The centerline curvature should have a minimum radius of twice the top width of the design flow water surface, i.e., the length of the water surface perpendicular to the flow line, but not less than 100 feet.

E. Cross Sections

The channel shape may be almost any type suitable to the location and to the environmental conditions. Often, the shape can be chosen to suit open space and recreational needs. However, limitations for the major storm design flow include:

1. Base Flow Channel

The base flow should be carried in a base flow channel. The minimum capacity should be 1 to 3 percent of the 100-year flow, but not less than 1 cubic foot per second. Base flow channels shall be constructed of materials to minimize erosion, to facilitate maintenance, and to aesthetically blend with the adjacent vegetation and soils.

2. Bottom Width

The bottom width shall be consistent with the maximum depth and velocity criteria.

3. Maintenance Easements

A maintenance corridor shall be provided for all channels. Channels with a top width less than 20 feet wide shall be provided with a maintenance corridor on one side of the channel that is at least 20 feet wide and accessible to maintenance equipment. Channels with top widths 20 feet wide and greater shall have a 20 feet corridor on both sides. No permanent structures, fences, or access barriers shall be placed within the maintenance corridor.

4. Side Slopes

Side slopes shall be 4H:1V or flatter; the minimum side slope shall be 3H:1V. Steeper slopes may be used in existing developed areas subject to additional erosion protection and approval from the City.

5. Vegetation

The vegetation species chosen to line channels must be sturdy, drought resistant, easy to establish. A thick root structure is necessary to control weed growth and erosion. The NRCS can provide assistance selecting appropriate grass mixtures and recommending seeding and maintenance methods.

Newly constructed channels must be stabilized immediately after completion and provided with a protective cover of mulch or an appropriate temporary liner sufficient to hold soil and seed in place until vegetation is established. If possible, disturbed areas should be seeded with a permanent vegetation seed mix. To provide quick ground cover the seed mix a season appropriate nurse crop. Vegetation such as rye grain, millet, etc., germinates quickly and will not compete with the sod-forming grasses. When the immediate seeding of permanent vegetation is not practical, an annual crop may be planted and the perennial vegetation seed may be planted later in the stubble or residue.

6.6.3 Concrete-Lined Channels

The criteria for the design and construction of concrete lined channel are presented below:

A. Freeboard

Adequate channel freeboard above the designed water surface shall be provided and should be not less than that determined by Equation 6-11:

$$H_{FB} = 2.0 + 0.025V\,(d)^{0.67} \qquad (6\text{-}11)$$

where:

H_{FB}	=	freeboard height, in feet
V	=	average channel flow velocity, in feet per second
d	=	depth of flow, in feet

Freeboard shall be provided above superelevation, standing waves, and/or other water surface disturbances. Concrete side slopes should be extended to provide freeboard. Freeboard should not be obtained by the construction of levees.

B. Superelevation

Superelevation of the water surface shall be determined at all horizontal curves and design of the channel section adjusted accordingly.

C. Velocities

Flow velocities should not exceed 8 feet per second or result in a Froude Number greater than 0.9 for non-reinforced linings. Flow velocities should not exceed 18 feet per second for reinforced linings.

6.6.4 Rock-Lined Channels

Channel linings constructed from ordinary riprap, or wire encased rock (gabions) to control channel erosion can be cost effective. Situations for which riprap linings might be appropriate are: (1) where major flows, such as the 100-year flood are found to produce channel velocities in excess of allowable non-eroding values; (2) where channel side slopes must be steeper than 3H:1V; (3) for low flow channels; and (4) where rapid changes in channel geometry occur, such as at channel bends and transitions. State and federal rules can also govern the use of hard linings such as riprap in intermittent and perennial streams.

A. Riprap Channel Linings

Many factors govern the size of the rock necessary to resist the forces tending to move the riprap. For the riprap itself, this includes the size and weight of the individual rocks, the shape of the stones, the gradation of the particles, the blanket thickness, the type of bedding under the riprap, and the slope of the riprap layer. Hydraulic factors affecting riprap include the velocity, current direction, eddy action, and waves. Riprap channel linings should be designed according to North Carolina Erosion and Sediment Control Planning and Design Manual, Appendix 8.05 or Section 6.6.4.

1. Roughness Coefficient

The Manning's roughness coefficient for ordinary riprap and grouted riprap should be selected using Table 6-3. The "n" value is dependent on the predominant rock size.

2. Rock Size

The design should adhere to the North Carolina Department of Transportation (NCDOT) Standard Specifications for Roads and Structures for gradation requirements for riprap.

3. Toe Protection

Where only the channel sides are to be lined, additional riprap is needed to provide for long term stability of the lining. In this case, the riprap lining should extend at least 3 feet below the existing channel bed and the thickness of the blanket below the existing channel bed increased to at least three times d_{50} to accommodate possible channel scour during floods. The term d_{50} means the rock size for which 50 percent of the sample is finer and can be determined by a sieve analysis from a material sample.

4. Channel Bends

The potential for erosion increases along the outside bank of a channel bend due to the acceleration of flow velocities on the outside part of the bend. Thus, it is often necessary to provide erosion protection in channels which otherwise would not need protection.

The minimum allowable radius for a riprap lined bend is 1.2 times the top width of the design flow water surface and in no case less than 50 feet. Riprap protection should be placed along the outside of the bank and extend downstream from the bend a distance equal to the length of the bend.

Where the mean channel velocity exceeds the allowable non-eroding velocity in straight channel sections, the rock size in the bends must be 3 to 6 inches greater around bends having a radius less than the greater of the following: two times the top width, or 100 feet. The minimum allowable radius for a riprap lined bend in this case is also 1.2 times the top width of the design flow water surface.

5. Transitions

Scour potential is amplified by turbulent eddies in the vicinity of rapid changes in channel geometry such as transitions and bridges. Riprap protection for transitions shall be designed in accordance with the Federal Highway Administration's (FHWA) HEC-11, Design of Riprap Revetment.

B. Wire Enclosed Rock (Gabions)

Wire enclosed rock refers to rocks that are bound together in a wire basket so that they act as a single unit, usually referred to as a gabion. One of the major advantages of wire enclosed rock is that it provides an alternative in situations where available rock sizes are too small for ordinary riprap. Another advantage is the versatility that results from the regular geometric shapes of the wire-enclosed rock. The rectangular blocks and mats can be fashioned into almost any shape that can be formed with concrete. Plastic coated wire should be specified. The design professional should be aware that if the flow contains coarse material, sand or gravel, it may break the wire basket, enabling the smaller rocks within the gabions to be transported downstream.

C. Bedding Requirements for Rock-Lined Channels

Long term stability of riprap and gabion erosion protection is strongly influenced by proper bedding conditions. A large percentage of all riprap failures are directly attributable to bedding failures. A properly designed bed provides a buffer of intermediate sized material between the channel bed and the riprap to prevent piping of channel particles through the voids in the riprap. Two types of bedding are commonly used: (1) a granular bedding filter and (2) filter fabric.

1. Granular Bedding

A bed of mineral aggregate is adequate for most ordinary riprap, grouted riprap, or wire encased riprap applications. The NCDOT Standard Specifications for Roads and Structures should be used for granular bedding.

2. Filter Fabric

Filter fabric has proven to be an adequate replacement for granular bedding in many instances. Filter fabric provides an adequate bedding of channel linings along uniform mildly sloping channels where leaching forces are primarily perpendicular to the fabric.

Filter fabric is not a complete substitute for granular bedding. Filter fabric usually provides filtering action only perpendicular to the fabric and usually has only a single equivalent pore opening between the channel bed and riprap. Filter fabric has a relatively smooth surface, which provides less resistance to stone movement. As a result, filter fabric is restricted to slopes no steeper than 2.5H:1V. Tears in the fabric greatly reduce its effectiveness; therefore, direct dumping of riprap on filter fabric is usually not recommended and care must be exercised during construction.

At drop structures and sloped channel drops, where seepage forces may run parallel with the fabric and cause piping along the bottom surface of the fabric, special care is required in the use of filter fabric. Seepage parallel with the fabric might be reduced by folding the edge of the fabric vertically downward about 2 feet (similar to a cutoff wall) at approximately 12-foot intervals along the installation, particularly at the entrance and exit of the channel reach. Filter fabric should be lapped a minimum of 12 inches at roll edges with upstream fabric being placed on top of downstream fabric at the lap.

Fine silt and clay may clog the openings in the filter fabric, preventing free drainage and increasing the failure potential due to uplift. For this reason, a granular filter is recommended for fine silt and clay channel beds.

6.6.5 Other Channel Linings

The criteria for the design of channels with linings other than vegetation, rock, or concrete will be dependent on the manufacturer's recommendations for the specific product. The design professional will be required to submit the technical data in support of the proposed material. Additional information or calculations may be requested by the City to verify assumptions or design criteria. The following minimum criteria will also apply:

A. Flow Velocity

The maximum normal depth velocity will be dependent on the construction material utilized. The Froude Number shall be less than 0.8.

B. Freeboard

Freeboard shall be calculated using the same equation as that for vegetative-lined channels. The design professional should adjust for horizontal curvature.

C. Curvature

The centerline curvature shall have a minimum radius equal to twice the top width of the design flow but not less than 100 feet.

D. Roughness Coefficient

A Manning's "n" value range shall be established by the manufacturer's data with the high value used to determine depth/capacity requirements and the low value used to determine Froude Number and velocity restrictions.

E. Cross Sections

The same cross section criteria as that used for vegetative-lined channels shall apply.

6.7 WATER SURFACE PROFILE ANALYSIS

For final design, water-surface profiles must be computed for all major channels. Computation of the water-surface profile should utilize the standard backwater analysis and consider all losses due to changes in channel velocity, drops, curves, bridge openings, and other obstructions. Computations must begin at a known point and extend in an upstream direction for subcritical flow.

Backwater computation can be made using the standard step method presented in Open-Channel Hydraulics, by Chow. Many computer programs are available for the computation of backwater curves. The most widely used program is HEC-RAS, Water-Surface Profiles, developed by the United States Army Corps of Engineers (USACE). This program will compute water-surface profiles for natural and manmade channels.

WSPRO, a program developed for the FHWA can also be used to analyze one-dimensional gradually varied steady flow in open channels. WSPRO can analyze flow through bridges and culverts, embankment overflow, and multiple-opening stream crossings.

XP-SWMM, Stormwater Management Model, a program originally developed by the Environmental Protection Agency, can also be selected to analyze open channels. In addition, the model is suitable for analyzing closed conduit systems in both free surface discharge and surcharge conditions.

For prismatic channels, the backwater calculation can be computed manually using the Direct Step Method. For an irregular non-uniform channel, the Standard Step Method is used, which is a more tedious iterative process. The use of HEC-RAS, WSPRO, XP-SWMM, or comparable program is recommended for non-uniform channel analysis.

The effects of superelevation and energy losses due to resistance in open channel bends must be considered in backwater computations. In addition to superelevation on bends, flow separation in the bend creates a backwater effect that must also be considered. More detail on determining these effects may be found in Chow's Open Channel Hydraulics.

6.8 SUPERCRITICAL FLOW

Supercritical flow in an open channel creates certain hazards that the design professional must take into consideration. From a practical standpoint, it is generally not possible to have any curvature in such a channel. Careful attention must be taken to ensure against excessive oscillatory waves resulting from minor obstructions, which may extend down the entire length of the channel. Imperfections at joints of lined channels may rapidly cause a deterioration of the joints, resulting in a complete failure of the channel. Additionally, high-velocity flow entering cracks or joints creates an uplift force by converting velocity head to a negative pressure head, which can damage the channel lining.

6.9 ENERGY DISSIPATORS

Hydraulic structures include energy dissipators, in the form of channel drops, transitions, baffle chutes, riprap, plunge pools, and many other specific drainage works. Their shape, size, and other features vary widely depending upon the function to be served. Riprap aprons and plunge pools are the preferred design options to dissipate energy in this area, and therefore, this Article focuses on these two energy dissipaters. The other mentioned types are highly engineered structures. If their design is required, more information may be found in the Bureau of Reclamation publication Hydraulic Design of Stilling Basins and Energy Dissipaters and the FWHA publication HEC-14, Hydraulic Design of Energy Dissipaters for Culverts and Channels.

6.9.1 Riprap

Constructed riprap may serve as a lining as well as a dissipater since it dissipates the flow energy and slows velocities. The Manning's coefficient for roughness for riprap ranges from 0.023 to 0.036 (see Table 6-3). The riprap dissipater design is governed by the same rules and principals as riprap channel lining and riprap apron design. Riprap aprons should be designed according to North Carolina. Erosion and Sediment Control Planning and Design Manual, Appendix 8.06

Traditionally, riprap is placed at locations prone to channel bed and bank erosion and periodically is used as a retrofit design solution when flow regime changes have caused excessive channel flows and velocities higher than permissible for the channel lining. Placement of riprap on the channel bottom and banks downstream of an outlet structure is often required for alleviating possible undermining of the structure.

Riprap design should take into account the following parameters:

- stone durability,
- stone density,
- stone size,
- stone shape,
- stone gradation,
- velocity of flow against the stone,
- filter bed requirements,
- channel side slopes,
- the design flow Froude Number, and
- the size and type of stone readily available from commercial sources.

Most of the riprap mixture should consist of stones having length, width, and thickness dimensions as nearly equal as practical and should not be flat slabs. The riprap layer should be a minimum of 1 1/2 times, as thick as the dimension of the large stones (curve size), and should be placed over a gravel bedding or permeable geotextile layer.

A primary reason for riprap failure is placement of undersized individual stones in the maximum size range. Failure also occurs because of improper engineering design of riprap gradation, seepage control, and/or bedding filter requirements.

Installation of riprap dissipators at culverts located in perennial and intermittent streams must be performed in accordance with North Carolina Division of Water Quality and USACE criteria and must not interfere with the possible migration of water based life in the stream.

6.9.2 Plunge Pools

A plunge pool is naturally formed by scour when a free-falling flow drops vertically into a pool. It will be scoured to a depth relative to the height of fall, depth of tailwater, and the concentration of flow. The plunge pool dissipater mimics this natural phenomenon with a special emphasis on the design material. Since the depth of scour is influenced by the erodibility of the streambed material, the constructed pool must be heavily protected with adequately large riprap or reinforced concrete to safely absorb the energy and erosive forces of falling water. A plunge pool may only be used in a channel with a continuous low flow because of the health and safety hazards created by a stagnant pool.

6.10 FLOW TRANSITIONS

A flow transition structure is a change of channel cross section designed to allow for a minimum amount of flow disturbance. Several types of transitions are shown on Figure 6-3, on the next page. The abrupt (headwall) and the straight line (wingwall) are the most common.

Special inlet transitions are useful when the conservation of flow energy is essential because of allowable headwater considerations. Section 7 Culverts and Bridges includes a discussion on culvert design with improved inlets.

Outlet transitions (expansions) must be considered in the design of all culverts, energy dissipaters, and channel protection. The standard wingwall-apron combinations and expansions downstream of dissipater basins are most common.

6.11 SCOUR

Basically, scour is the net result of an imbalance between the capacity of the flow to transport sediment from an area and the rate of supply of sediment to the area. At a bridge crossing, for instance, the area of interest is the immediate vicinity of the bridge foundation, the piers, and abutments. The imbalance of this capacity and supply can arise from a variety of causes, which can be generally categorized as 1) those characteristics of the stream itself, and 2) those due to the modification of the flow by the bridge piers and abutments.

Because of the overall complexity of the hydrodynamic forces existing in a natural stream channel, the detailed flow pattern in an unobstructed stream cannot be predicted over time with great accuracy. Reasonable estimates can be made based on observations along reaches of similar streams, and in some cases, actual records and measurements for the particular reach of the stream under investigation can be performed. The design professional is encouraged to use the method and procedures in the FWHA's publication HEC-18, Evaluating Scour of Bridges to evaluate scour.

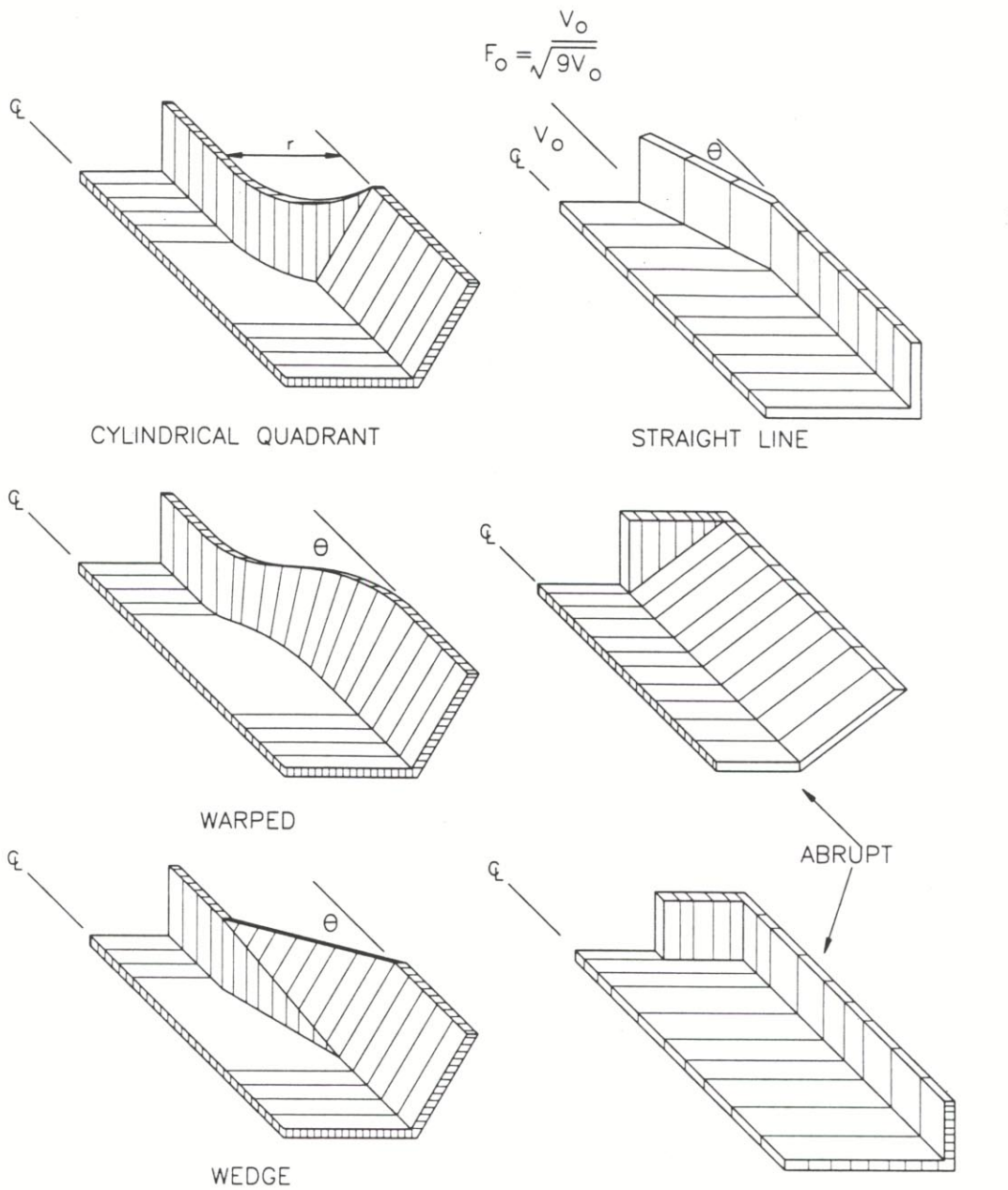

Source: Federal Highway Administration, HEC No. 14, Hydraulic Design of Energy Dissipators for Culverts and Channels.

Figure 6-3 Channel Transition Types

This Page Intentionally Left Blank

SECTION 7
CULVERTS AND BRIDGES

Page

LIST OF TABLES

LIST OF FIGURES

7.1 INTRODUCTION

The function of a drainage culvert or bridge is to pass the design storm flow under a roadway, railroad, or other features within the design criteria parameters without negative impacts on the upstream or downstream channel, adjacent areas, or structures. Symbols used in this unit are defined throughout and also in Section 7.8 List of Symbols.

7.2 DESIGN CRITERIA

7.2.1 Design Frequency

Culverts and bridges shall be designed such that stormwater does not overtop the associated roadway for the minor storm event. The minor storm recurrence intervals for various roadway types are presented in Table 1-1 in Section 1.3 Design Policy. In addition, during the 100-year storm event, stormwater shall not overtop any street crossing over a Federal Emergency Management Agency (FEMA) regulated streams; otherwise, for streams not regulated by FEMA overtopping of alley or local streets shall not exceed 12 inches. Overtopping of collector, thoroughfare, and freeway roadways is not permitted. Residential dwellings public, commercial, and industrial buildings shall not be inundated at the lowest finished floor, which must be 2 feet above the elevation generated by 100-year storm event, unless the building is flood proofed.

7.2.2 Culvert Discharge Velocity

The culvert design must consider effects of discharge velocity, eddies, or turbulence on the natural channel, downstream property, and roadway embankment. The maximum permissible velocity in the downstream channel shall be based on criteria discussed in Section 6.5 Design Consideration.

A minimum velocity of 2.5 feet per second must be maintained for the design flow in all culverts to prevent sedimentation. Deviation from this minimum velocity is permitted where the construction of a culvert is regulated by the United States Army Corps of Engineers (USACE) for the purpose of protection of habitat for aquatic wildlife. Areas prone to siltation or scour must be protected commensurate with the value of the structure and surrounding property and installed to protect against damage or structure failure.

7.2.3 Culvert Material Type

Culverts shall be made of either concrete or corrugated metal. Structural plate products are also acceptable. Culverts must comply with North Carolina Department of Transportation requirements for material and performance criteria.

7.2.4 Bridge Openings

Bridge openings should be designed to have as little effect on the flow characteristics as possible, and be consistent with good bridge design and economics. Bridge structures must not protrude into the cross section of the design flow.

7.2.5 Floodplain Management

Certain areas within the City have been designated by the FEMA as flood hazard areas. All work impacting or adjacent to these areas shall be in compliance with all current FEMA regulations and permit requirements. The City has designated Floodplain Protection Overlay Districts (FPOD) consistent with Article 4.14 of its Unified Development Ordinance. All developments within a FPOD that apply for a Stormwater Permit must document that the development is in full compliance with the FPOD regulations.

7.3 CULVERT TYPES

Culverts shall be selected based on hydraulic principles, with a size and shape that creates a headwater depth that will not cause damage to adjacent property. The range of operating conditions must be known to properly design a culvert. Two major types of culverts exist, based on the hydraulic characteristics of flow: inlet and outlet control. For each type of control, different factors and equations are used to compute the hydraulic capacity of a culvert.

A culvert barrel may flow full or partially full. Full flow throughout the length of pipe is rare, and generally at least part of the barrel flows partially full. Water is flowing under pressure in a full flow condition and the capacity of the culvert is affected by the upstream and downstream conditions and the hydraulic characteristics of the culvert. Partially full or free surface flow can be categorized as subcritical, critical, or supercritical.

A dimensionless parameter known as the Froude Number is calculated to help categorize the flow. The Froude Number is discussed in Section 6.4.3 Critical Flow. The different flow regimes are summarized in Table 7-1.

TABLE 7-1
FLOW CATEGORIES

Flow Type	Depth	Velocity	Froude Number
Subcritical	$y > y_c$	$V < V_c$	$Fr < 1$
Critical	$y = y_c$	$V = V_c$	$Fr = 1$
Supercritical	$y < y_c$	$V > V_c$	$Fr > 1$

7.3.1 Inlet Control

Under inlet control, only the headwater and the inlet configuration affect the hydraulic performance. The headwater depth is measured from the invert of the culvert entrance to the water surface at the culvert entrance. This depth of water at the culvert entrance supplies the energy necessary to force flow through a culvert. The inlet face area is the same as the barrel area for non-improved inlets. The inlet edge configuration plays an important role in the hydraulic efficiency of culverts. Inlet types include projected, mitered, squared edges in a headwall, and beveled edge configurations. Figure 7-1, on the next page, shows several types of flow hydraulics under inlet control conditions.

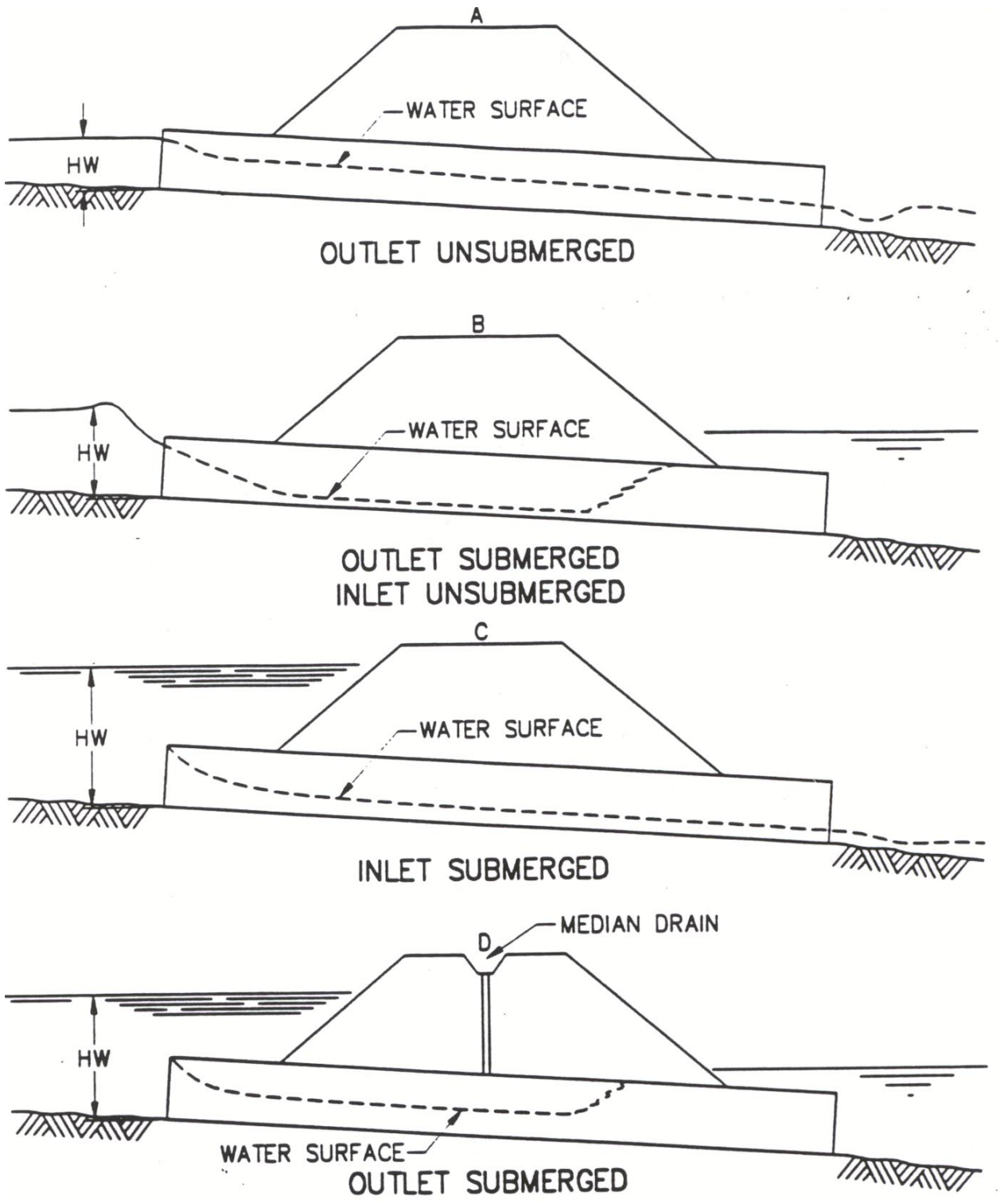

Figure 7-1 Types of Inlet Control

In a condition where neither the inlet nor the outlet ends of the culvert are submerged, the flow passes through critical depth just downstream of the culvert entrance and the flow in the barrel is supercritical. The barrel flows partially full over its length, and the flow approaches normal depth at the outlet end.

If critical flow occurs near the inlet, the culvert is operating under inlet control. The maximum discharge through a culvert flowing partially full occurs when flow is at critical depth for a given energy head. To assure that flow passes through critical depth near the inlet, the culvert must be laid on a slope equal to or greater than critical slope for the design discharge. Placing culverts that flow partially full on slopes greater than critical slope will increase the outlet velocities but will not increase the discharge. Discharge is limited by the section near the inlet where critical flow occurs.

The capacity of a culvert flowing partially full with inlet control is governed by the following equation when the approach velocity nears zero (see Figure 7-1A).

$$HW = d_c + \frac{V_2^2}{2g} + h_e \tag{7-1}$$

where:

HW	=	headwater depth, depth of water above the invert at the upstream end of the culvert in feet
d_c	=	critical depth of flow, in feet
V_2	=	critical velocity at entrance of culvert, in feet per second
g	=	acceleration of gravity, 32.2 feet per second squared
h_e	=	entrance head loss, in feet
	=	$k_e\left[\frac{V_2^2}{2g}\right]$
k_e	=	entrance loss coefficient (Table 7-2)

The submergence of the outlet end of the culvert does not assure outlet control as shown in Figure 7-1B. In this case, the flow just downstream of the inlet is supercritical and a hydraulic jump forms in the culvert barrel.

Figure 7-1C is a more typical design situation. The inlet end is submerged and the outlet end flows freely, the flow is supercritical and the barrel flows partially full over its length. Critical depth is located just downstream of the culvert entrance, and the flow is approaching normal depth at the downstream end of the culvert.

Figure 7-1D illustrates the fact that submergence of both the inlet and the outlet ends of the culvert does not assure full flow. In this case, a hydraulic jump will form in the barrel. A median inlet is required to ventilate the culvert barrel. If the barrel were not ventilated, sub-atmospheric pressures

TABLE 7-2
ENTRANCE LOSS COEFFICIENTS

Type of Structure and Design of Entrance	Coefficient k_e
Pipe, Concrete:	
Projecting from fill, socket end (groove end)	0.2
Projecting from fill, square-cut end	0.5
Headwall or headwall and wingwalls:	
Socket end of pipe (groove end)	0.2
Square-edged	0.5
Rounded (radius = 1/12D)	0.2
Mitered to conform to fill slope	0.7
[1]End section conforming to fill slope	0.5
Beveled edges, 33.7° or 45° bevels	0.2
Side-or slope-tapered inlet	0.2
Pipe, or Pipe-Arch, Corrugated Metal:	
Projecting from fill (no headwall)	0.9
Headwall or headwall and wingwalls square-edge	0.5
Mitered to conform to fill slope, paved or unpaved slope	0.7
[1]End section conforming to fill slope	0.5
Beveled edges, 33.7° or 45° bevels	0.2
Side-or slope-tapered inlet	0.2
Box, Reinforced Concrete:	
Headwall parallel to embankment (no wingwalls)	
Square-edged on 3 edges	0.5
Rounded on 3 edges to radius of 1/12 barrel dimension or beveled edges on 3 sides	0.2
Wingwalls at 30° to 75° to barrel	
Square-edged at crown	0.4
Crown edge rounded to radius of 1/12 barrel dimension or beveled top edge	0.2
Wingwall at 10° to 25° to barrel	
Square-edged at crown	0.5
Wingwalls parallel (extension of sides)	
Square-edged at crown	0.7
Side- or slope-tapered inlet	0.2

[1] "End sections conforming to fill slope" are the sections commonly available from manufacturers. From limited hydraulic tests, they are equivalent in operation to a headwall in both inlet and outlet control. Some end sections incorporating a closed taper in their design have superior hydraulic performance.

Source: Federal Highway Administration, Hydraulic Design Series No. 5, Hydraulic Design of Highway Culverts.

could develop and create an unstable condition during which the barrel would alternate between full flow and partially full flow.

7.3.2 Outlet Control

All the factors affecting the hydraulic performance of a culvert in inlet control also influence culverts in outlet control. In addition, culvert performance under outlet control conditions is affected by the barrel characteristics (roughness, area, shape, length, and slope) and the tailwater elevation.

Barrel roughness is a function of the culvert material and is represented by Manning's "n" coefficient. The barrel length is the total length extending from the entrance to the exit of the culvert. The barrel slope is the actual slope of the culvert and is often equivalent to the slope of the stream. The tailwater elevation is based upon the downstream water surface elevation measured from the outlet invert. Backwater calculations or normal depth approximations, when appropriate, are two methods used to determine the tailwater elevation. Figure 7-2, on the next page, depicts several examples of culvert hydraulics under outlet control.

Figure 7-2A represents the classic full flow condition, with both inlet and outlet submerged. The barrel is conveying pressurized flow throughout its length. This condition is often assumed in calculations, but seldom presents itself in non-laboratory conditions.

In Figure 7-2B, the outlet is submerged with the inlet open to the atmosphere. For this case, the headwater is shallow so that the inlet crown is exposed as the flow contracts into the culvert.

Flow at the outlet of most culverts is open to atmospheric pressure, but, depending on topography or downstream constraints, a tailwater pool of a depth sufficient to submerge the outlet may form. For an outlet to be submerged, the depth at the outlet must be equal to or greater than the diameter of pipe or height of box plus any elevation difference between the invert out and the stream bed. The capacity of a culvert flowing full with a submerged outlet is governed by the following equation when the approach velocity nears zero. Outlet velocity is based on full-pipe flow at the outlet.

$$HW = H + TW - S_o L \tag{7-2}$$

where:

HW	=	headwater depth, in feet, depth of water above the invert at the upstream end of the culvert.
H	=	head for culvert flowing full, in feet
TW	=	tailwater depth, in feet
S_o	=	slope of culvert, in feet per foot
L	=	length of culvert, in feet

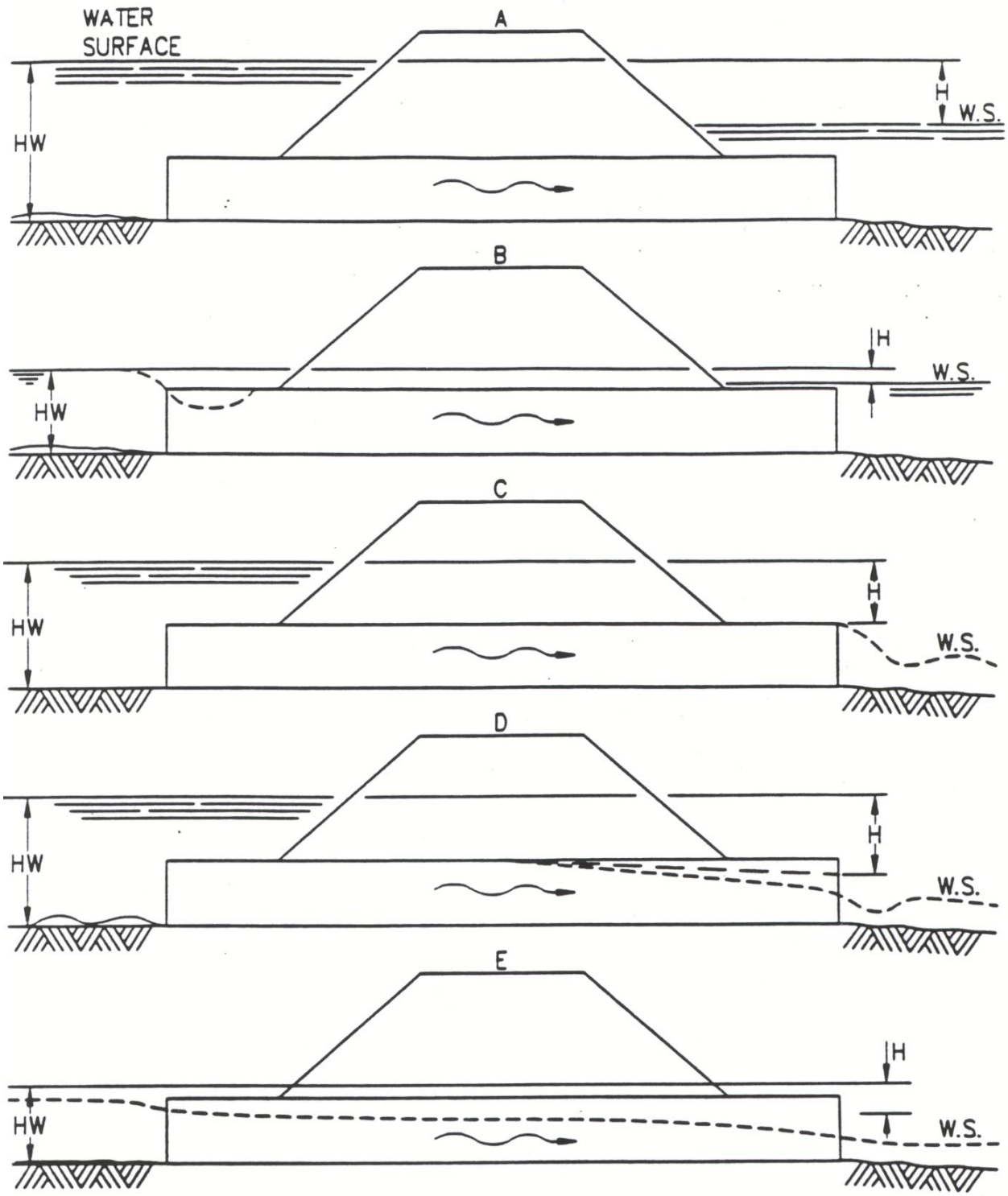

Figure 7-2 Types of Outlet Control

Figure 7-2C shows the entrance submerged to such a degree that the culvert flows full throughout its entire length while the exit is open to the atmosphere. This rare condition requires an extremely high headwater to maintain full barrel flow without tailwater. Outlet velocities are usually high under this condition.

Figure 7-2D represents a more typical situation. The culvert entrance is submerged due to high headwater and the outlet end flows freely with a low tailwater. For this condition, the barrel flows partially full over at least part of its length (subcritical flow) and flow reaches a critical depth just upstream of the outlet.

The capacity of a culvert flowing full over at least part of its length with a submerged entrance (HW $\geq$ 1.2 D) is governed by the following equation when the approach velocity nears zero. Outlet velocity is based on critical depth if the tailwater depth is less than critical depth (TW < d_c). If the tailwater depth is greater than critical depth (TW > d_c), outlet velocity is based on the tailwater depth.

$$HW = H + P - S_o L \tag{7-3}$$

where:

HW	=	headwater depth, in feet, depth of water above the invert at the upstream end of the culvert
H	=	head for culverts flowing full, in feet
P	=	pressure line height, in feet
	=	$(d_c + D)/2$
d_c	=	critical depth, in feet
D	=	diameter or height of structure, in feet
S_o	=	slope of culvert, in feet per foot
L	=	length of culvert, in feet

In the condition where neither the inlet nor the outlet end of the culvert are submerged as in Figure 7-2E, the barrel flows partially full over its entire length, and the flow profile can be subcritical or supercritical. The tailwater depth can be above or below critical depth.

If the headwater pool elevation does not submerge the culvert inlet (HW < 1.2D), the design discharge is subcritical ($S_o < S_c$), the tailwater depth is above critical depth (TW $\geq d_c$), and the control occurs at the outlet. The capacity of the culvert is governed by the following equation when the approach velocity is considered zero.

$$HW = TW + \frac{V_{TW}^2}{2g} + h_e + h_f - S_o L \tag{7-4}$$

where:

HW	=	headwater depth above the invert of the upstream end of the culvert in feet (headwater depth must be equal to or less than 1.2D)
TW	=	tailwater depth above the invert at the downstream end of the culvert, in feet
V_{TW}	=	culvert discharge velocity, at tailwater depth, in feet per second
h_e	=	entrance head loss, in feet

$$= k_e\left[\frac{V_E^{\,2}}{2g}\right]$$

V_E	=	velocity just inside the culvert, in feet per second
k_e	=	entrance loss coefficient (Table 7-2)
g	=	acceleration of gravity, 32.2 feet per second squared
h_f	=	friction head loss, in feet

$$= \frac{29n^2L}{R^{1.33}}\left[\frac{V^2}{2g}\right]$$

n	=	Manning's roughness coefficient
L	=	length of culvert barrel, in feet
V	=	average culvert velocity, in feet per second
	=	Q/A
Q	=	discharge, in cubic feet per second
A	=	cross sectional area of flow, in square feet
R	=	hydraulic radius, in feet
	=	A/WP
WP	=	wetted perimeter, in feet
S_o	=	slope of culvert, in feet per foot

The capacity of a culvert flowing partially full with outlet control and a tailwater depth below critical depth ($TW < d_c$) is governed by the following equation when the approach velocity nears zero. The entrance is open to the atmosphere ($HW < 1.2D$), and the design discharge is subcritical ($S_o < S_c$).

$$HW = d_c + \frac{V_c^2}{2g} + h_e + h_f - S_o L \tag{7-5}$$

where:

HW	=	headwater depth above the invert of the upstream end of the culvert, in feet (headwater must be equal to or less than 1.2D, or entrance is submerged).
d_c	=	critical depth, in feet
V_c	=	critical velocity occurring at critical depth, in feet per second
h_e	=	entrance head loss, in feet
	=	$k_e\left[\frac{V_c^2}{2g}\right]$
k_e	=	entrance loss coefficient (Table 7-2)
g	=	acceleration of gravity, 32.2 feet per second squared
h_f	=	friction head loss, in feet
	=	$\frac{29n^2L}{R^{1.33}}\left[\frac{V^2}{2g}\right]$
V	=	average pipe velocity, in feet per second
	=	Q/A
Q	=	discharge, in cubic feet per second
A	=	cross sectional area of flow, in square feet
n	=	Manning's roughness coefficient
L	=	length of culvert barrel, in feet
R	=	hydraulic radius, in feet
	=	A/WP
WP	=	wetted perimeter, in feet
S_o	=	slope of culvert, in feet per foot

7.4 CULVERT END TREATMENTS

Properly designed headwalls and endwalls for culverts provide gradual flow transition, anchor the culvert to prevent movement, control erosion and scour resulting from excessive flow velocities and turbulence, and prevent adjacent soil from sloughing into the waterway opening.

Headwalls shall be constructed of reinforced concrete. Shapes, such as, straight parallel headwalls, flared headwalls, or warped headwalls, outfitted with or without aprons, depend on local site requirements. All corrugated metal culverts shall have a headwall and endwall with the exception of driveway culverts for roadside ditches, unless otherwise directed by the City.

7.4.1 Entrance Conditions

It is important to recognize that the operating characteristics of a culvert may be completely changed by the shape or condition at the inlet or entrance. Culvert designs must consider energy losses that may occur at the entrance. The entrance head losses may be determined by the following equation.

$$h_e = k_e \left[\frac{V^2}{2g} \right] \tag{7-6}$$

where:

h_e	=	entrance head loss, in feet
k_e	=	entrance loss coefficient (Table 7-2)
V	=	velocity of flow in culvert, in feet per second
g	=	acceleration of gravity, 32.2 feet per second squared

7.4.2 Headwall/Endwall Treatment

In general, the following guidelines should be used in the selection of the headwall or endwall type:

Straight Headwall and Endwall

A. Approach velocities are low (below 6 feet per second).
B. Backwater pools may occur.
C. Approach channel is undefined.
D. Sufficient right-of-way or easement is available.
E. Downstream channel protection is not required.

Flared Headwall and Endwall

A. Channel is well defined.
B. Approach velocities are between 6 and 10 feet per second.
C. Medium amount of debris is expected.

Warped (Twisted) Headwall and Endwall

A. Channel is well defined and concrete lined.
B. Approach velocities are between 8 and 20 feet per second.
C. Medium amount of debris is expected.

Warped headwalls outfitted with drop-down aprons effectively accelerate flow through the culvert and are effective endwalls where flow transitions from closed conduit flow to open-channel flow. This type of headwall design is appropriate only where the drainage structure is large and right-of-way or easement is limited.

7.4.3 Improved Inlets

Several types of improved inlets have been developed. The use of these inlets may provide substantial savings by allowing for a barrel size reduction in the proposed structure. The use of these inlets is optional and should be based on an economic analysis by the designer. For box culverts, reinforced concrete structures, and structures using headwalls, the use of beveled inlets or tapered inlets is required. Inlet improvements are reflected in the flow capacity calculations through the entrance loss coefficient, k_e presented in the Table 7-2. For more information and the design procedure, the designer must refer to HDS-5, Hydraulic Design of Highway Culverts, by the Federal Highway Administration (FHWA).

7.5 CULVERT DESIGN WITH STANDARD INLETS

The information and publications recommended to design culverts according to the procedure presented in this Section can be found in HDS-5, Hydraulic Design of Highway Culverts. For special cases and larger structure sizes, the FHWA publication HDS-10, Capacity Charts for the Hydraulic Design of Highway Culverts should be used. In addition, a PC compatible computer program (HY-8) is available from the FHWA to perform these calculations.

7.5.1 Culvert Sizing

Figures 7-3 through 7-10 contain a series of curves that show the discharge capacity per barrel for each of several sizes of similar type culverts for various headwater depths. Headwater is measured from the invert of the culvert, which is the low point of the culvert's cross section.

Each culvert size is described by two lines, one solid and one dashed. The numbers associated with each line are the ratio of the length, L, in feet, to the slope, $100S_o$, in percent. The dashed lines

represent the maximum $L/(100S_o)$ ratio for which the curves may be used without modification. The solid line represents the division between outlet and inlet control. For values of $L/(100S_o)$ less than that shown on the solid line, the culvert is operating under inlet control and the headwater depth is determined from the $L/(100S_o)$ value given on the solid line. The solid-line inlet control curves are plotted from model test data. The dashed-line outlet control curves are computed for culverts of various lengths with relatively flat slopes. It should be noted that unrestricted flow at the outlet was assumed (tailwater depth is assumed to not influence the culvert performance).

For culverts flowing under outlet control, the head loss at the entrance was computed, and the hydraulic roughness of the various culvert materials was taken into account in computing resistance loss for full or partly full flow. The Manning's "n" values used for each culvert type ranged from 0.012 to 0.032. Table 7-3 lists typical roughness coefficients for various types of culverts.

TABLE 7-3
MANNING'S ROUGHNESS COEFFICIENTS "n" FOR CULVERTS

Construction Materials	Design Coefficient[1]					
Concrete Pipe	0.012					
Corrugated-Metal Pipe*	2-2/3"x1/2" Corrugations				3"x1" Corrugations	
Unpaved	0.024				0.027	
25% Paved	0.021				0.023	
	Diameter					
Structural Plate Pipe*	5 ft		7 ft		10 ft	15 ft
Unpaved	0.033		0.032		0.030	0.028
25% Paved	0.028		0.027		0.026	0.024
Helically Corrugated Pipe*	2-2/3"x1/2" Corrugations					
	Diameter					
	12"	18"	24"	36"	48"	60" and Larger
Unpaved	0.011	0.014	0.016	0.019	0.020	0.021
25% Paved	--	--	0.015	0.017	0.020	0.019
	3"x1" Corrugations					
	Diameter					
	48"	54"	60"	66"	72"	78" and Larger
Unpaved	0.023	0.023	0.024	0.025	0.026	0.027
25% Paved	0.020	0.020	0.021	0.022	0.022	0.023

[1] Designer may select a single representative "n" for design purposes.
* Fully Paved All Types 0.012
Source: American Iron and Steel Institute, Modern Sewer Design

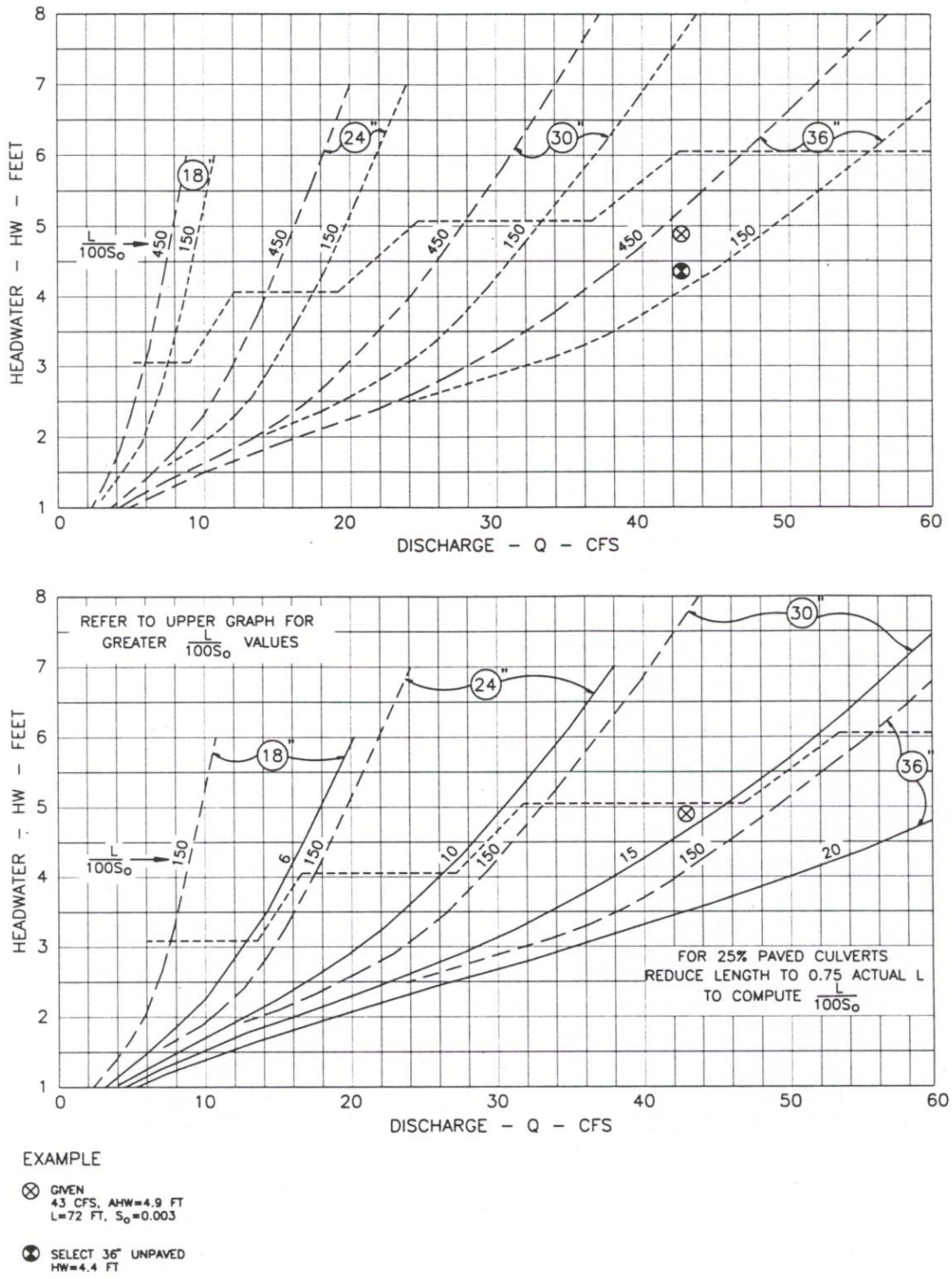

Source: Federal Highway Administration, HEC No. 10, Capacity Charts for the Hydraulic Design of Highway Culverts.

Figure 7-3 Culvert Capacity Standard Circular CMP, Headwall Entrance 18" to 36"

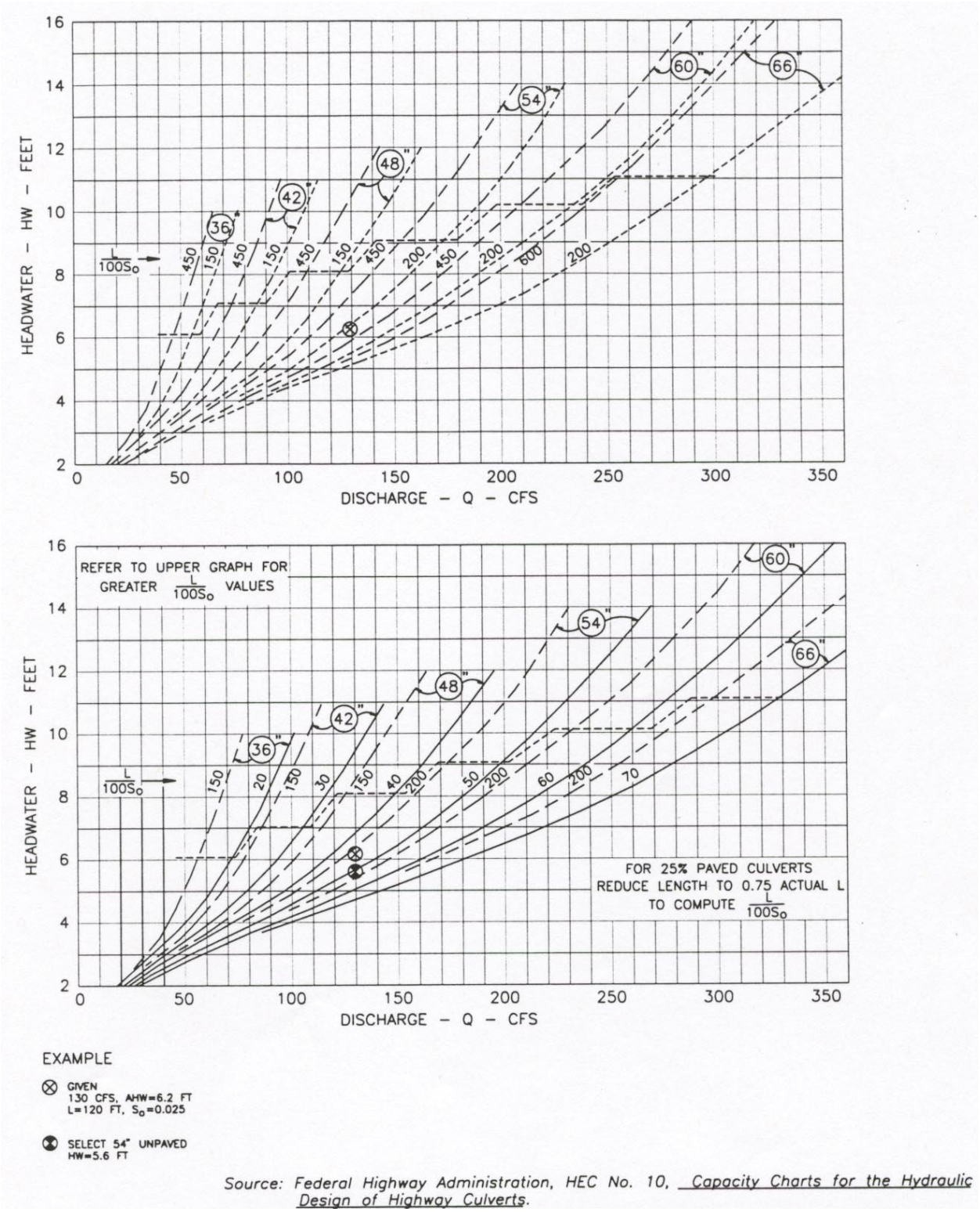

Source: Federal Highway Administration, HEC No. 10, Capacity Charts for the Hydraulic Design of Highway Culverts.

Figure 7-4 Culvert Capacity Standard Circular CMP, Headwall Entrance 36" to 66"

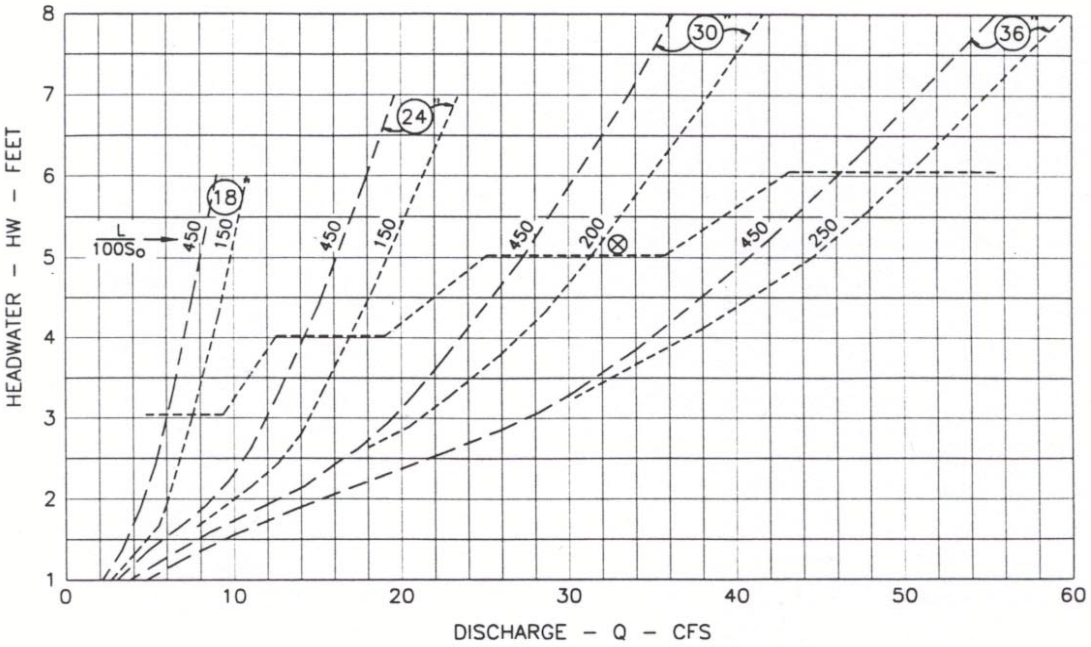

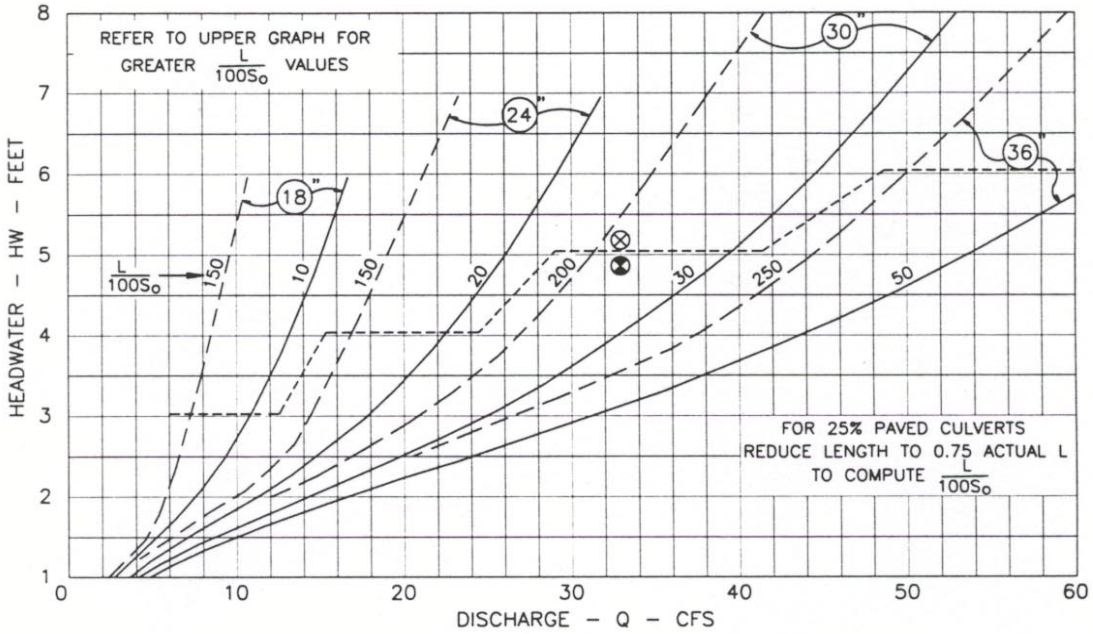

EXAMPLE

⊗ GIVEN
43 CFS, AHW=5.2 FT
L=70 FT, S_o=0.005

SELECT 30" UNPAVED
HW=4.9 FT

Source: Federal Highway Administration, HEC No. 10, Capacity Charts for the Hydraulic Design of Highway Culverts.

Figure 7-5 Culvert Capacity Standard Circular CMP, Projecting Entrance 18" to 36"

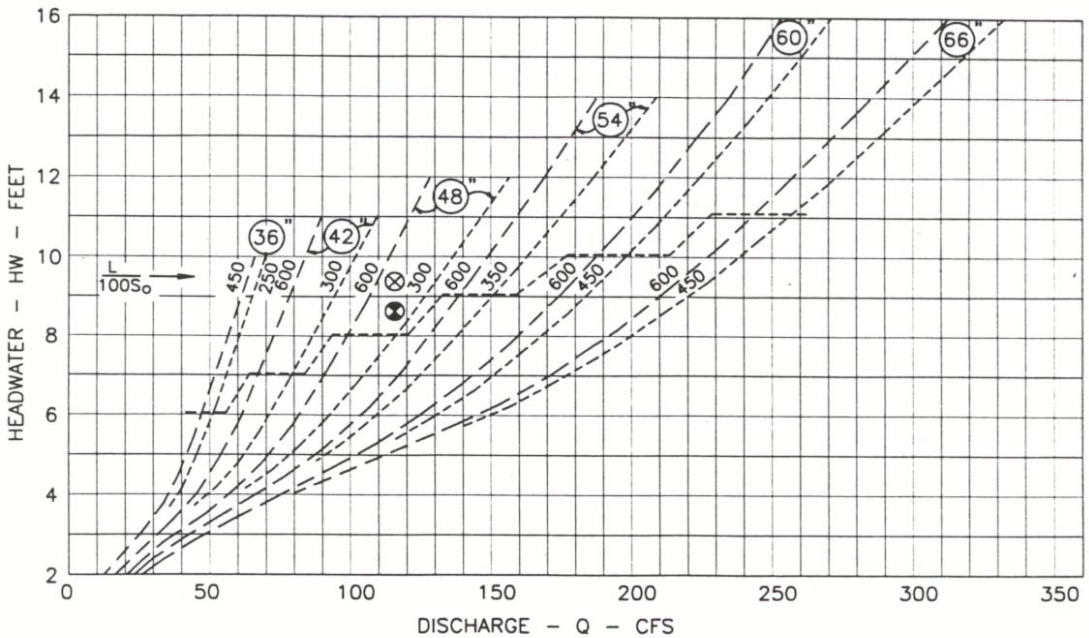

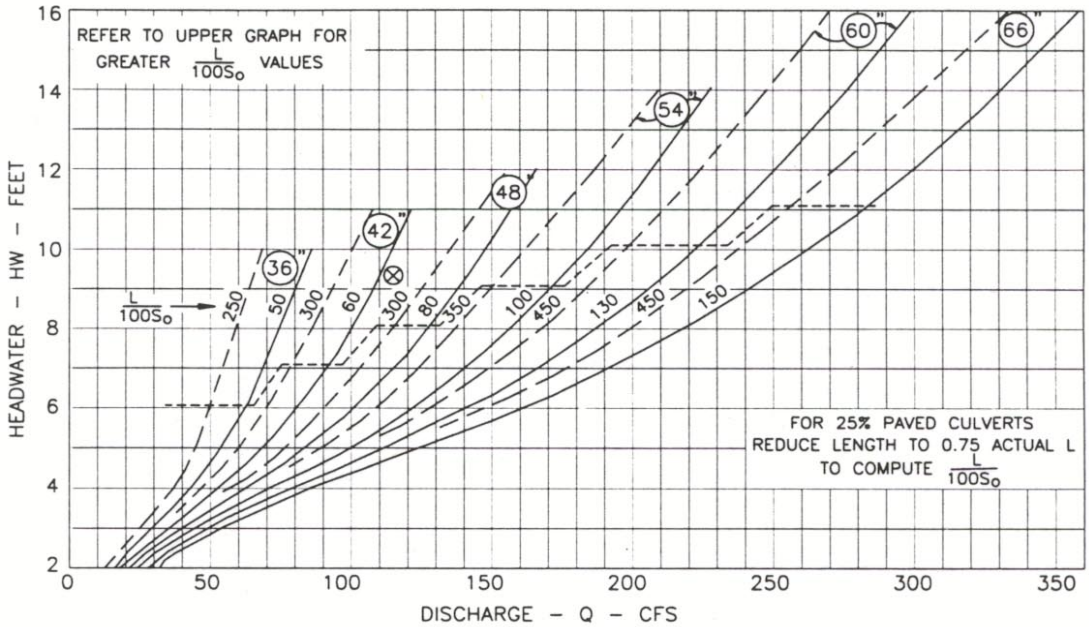

EXAMPLE

⊗ GIVEN
115 CFS, AHW=9.4 FT
L=135 FT, S_0=0.0034

SELECT 48" UNPAVED
HW=8.6 FT

Source: Federal Highway Administration, HEC No. 10, Capacity Charts for the Hydraulic Design of Highway Culverts.

Figure 7-6 Culvert Capacity Standard Circular CMP, Projecting Entrance 36" to 66"

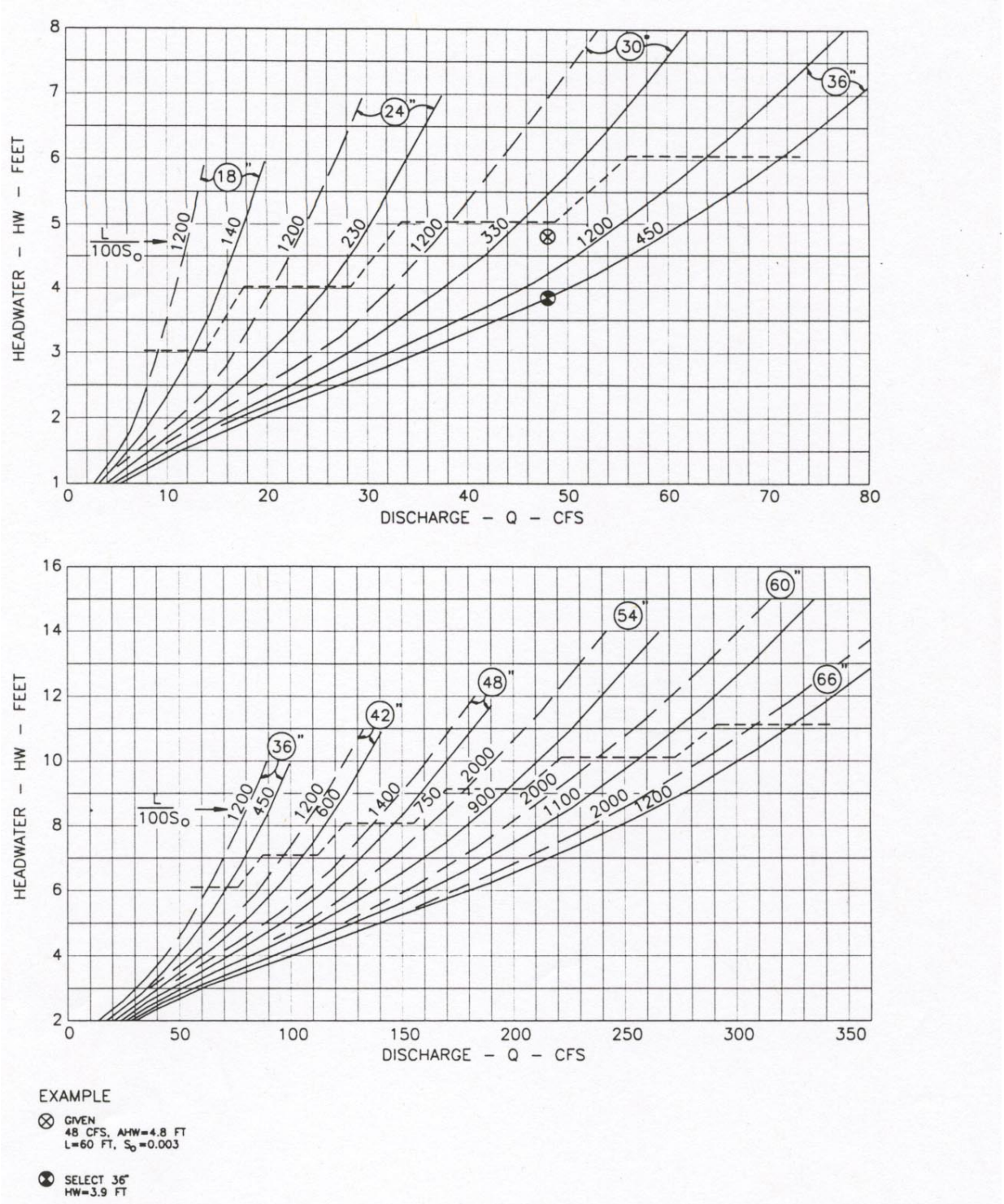

Source: Federal Highway Administration, HEC No. 10, Capacity Charts for the Hydraulic Design of Highway Culverts.

Figure 7-7 Culvert Capacity Standard Circular RCP, Square Entrance 18" to 66"

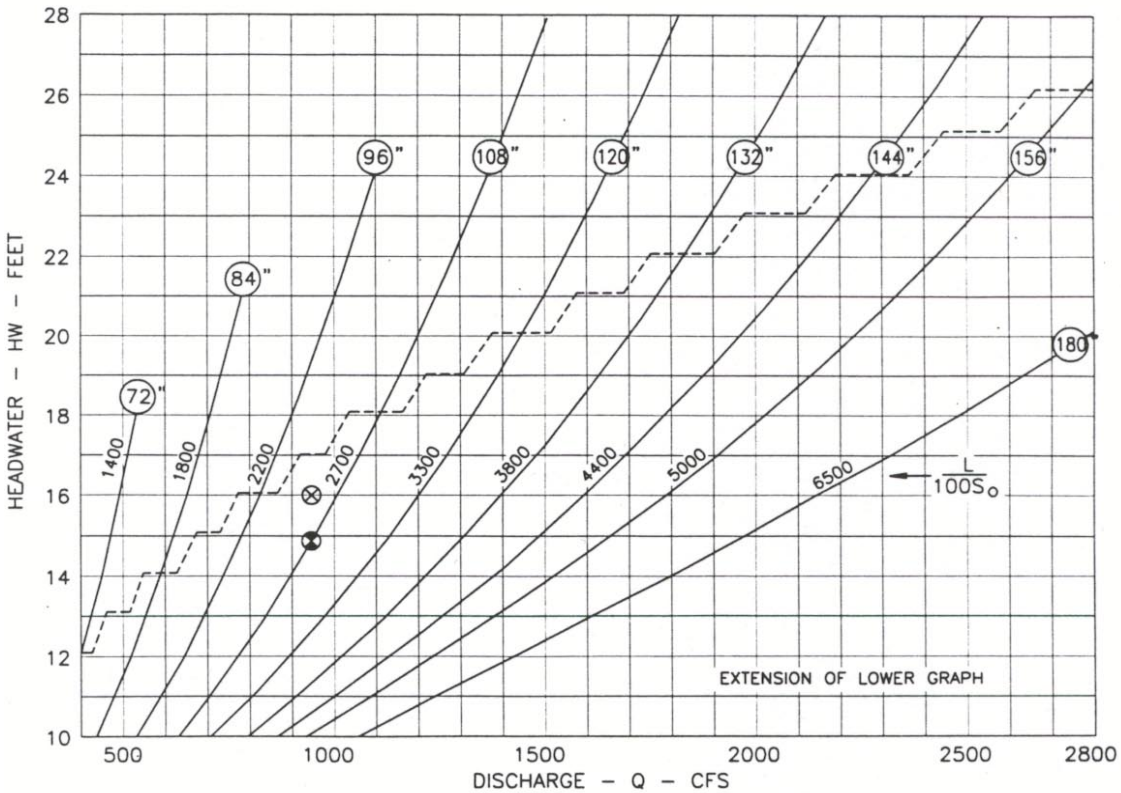

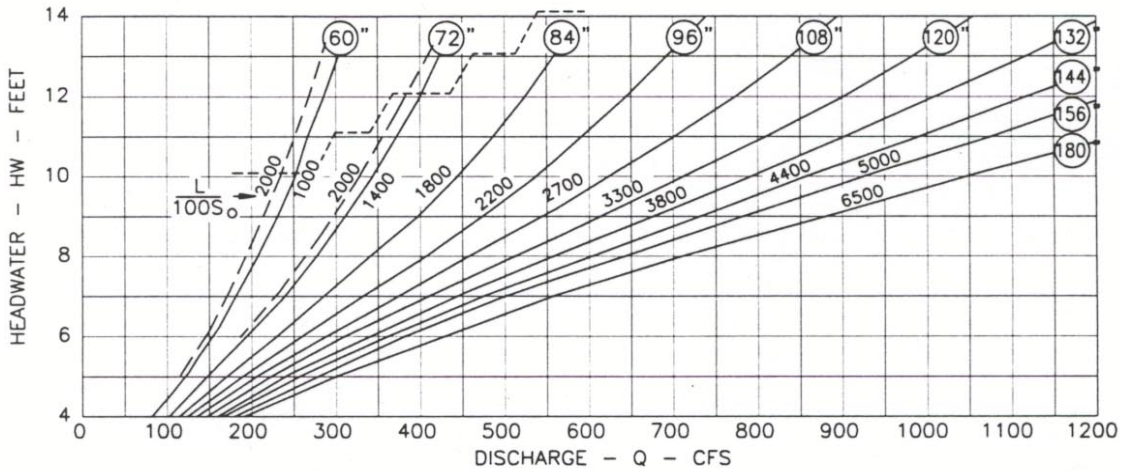

EXAMPLE

⊗ GIVEN
950 CFS, AHW=16 FT
L=480 FT, S_o=0.040

SELECT 108"
HW=15.0 FT

Source: Federal Highway Administration, HEC No. 10, Capacity Charts for the Hydraulic Design of Highway Culverts.

Figure 7-8 Culvert Capacity Standard Circular RCP, Square Edged Entrance 60" to 180"

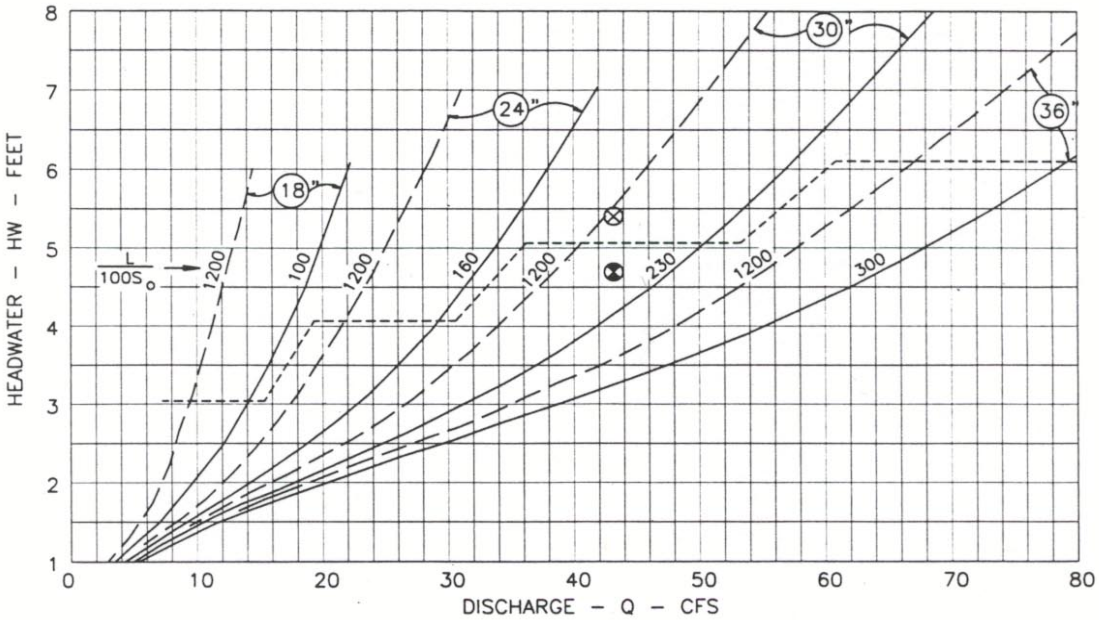

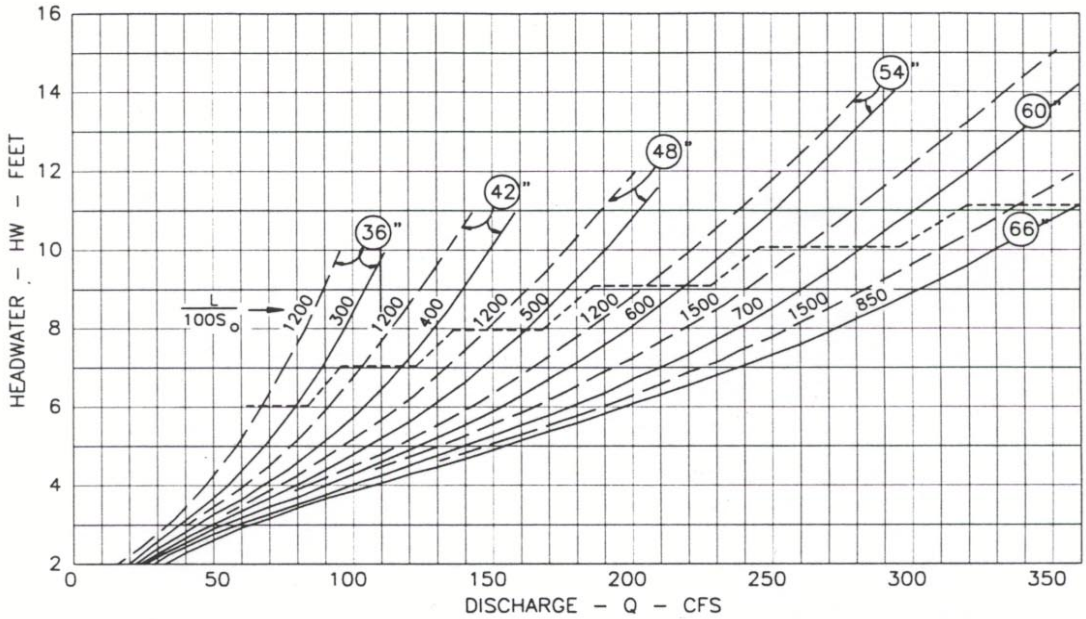

EXAMPLE

⊗ GIVEN
43 CFS, AHW=5.4 FT
L=120 FT, S_o=0.002

SELECT 30"
HW=4.7 FT

Source: Federal Highway Administration, HEC No. 10, Capacity Charts for the Hydraulic Design of Highway Culverts.

Figure 7-9 Culvert Capacity Circular RCP, Groove-Edged Entrance 18" to 66"

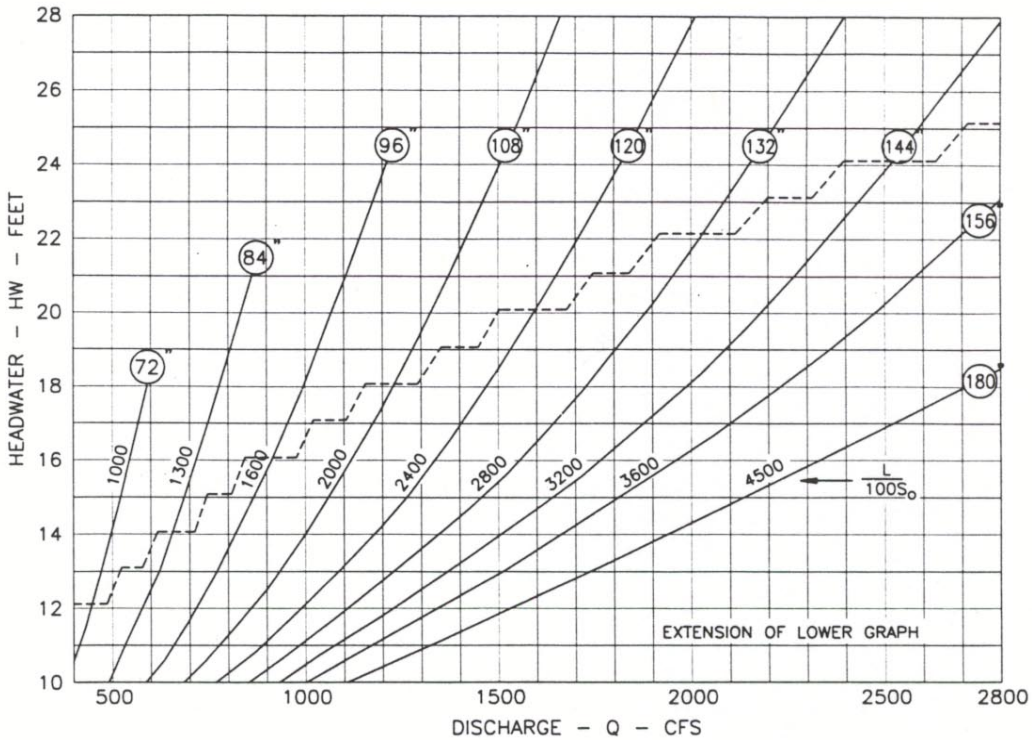

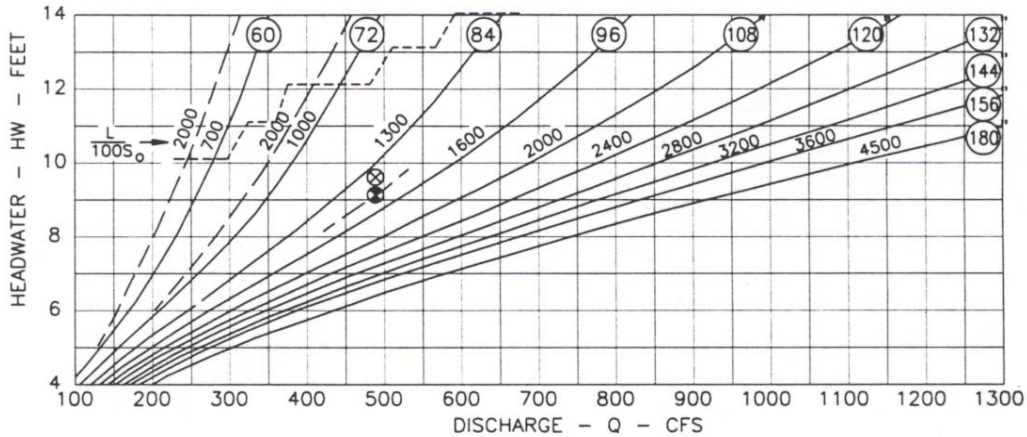

EXAMPLE

⊗ GIVEN
490 CFS, AHW=9.6 FT
L=50 FT, S_o=0.000

SELECT 90" ($\frac{L}{D}$=8)
HW=9.2 FT

Source: Federal Highway Administration, HEC No. 10, Capacity Charts for the Hydraulic Design of Highway Culverts.

Figure 7-10 Culvert Capacity Circular RCP, Groove-Edged Entrance 60" to 180"

Except for large pipe sizes, headwater depths on the charts extend to three times the culvert height. Pipe arches and oval pipe show headwater up to 2.5 times their height since they are generally used in areas of low fill. The dotted line, stepped across the charts, shows headwater depths of approximately twice the barrel height and indicates the upper limit of restricted use of the charts. Above this line, the headwater elevation should be checked with the standard inlet and outlet control nomographs found in Figures 7-11 through 7-18.

The headwater depth given by the charts is actually the difference in elevation between the culvert invert at the entrance and the total head, that is depth plus velocity head, for flow in the approach channel. In most cases, the water surface upstream from the inlet is close to this level, since velocities are low in the area upstream of the culvert, and the chart determination may be used as headwater depth for practical design purposes. Where the approach velocity is in excess of 3.0 feet per second, the velocity head must be subtracted from the curve determination of headwater to obtain the actual headwater depth.

Proper use of the capacity charts, Figures 7-3 through 7-10, will minimize problems of scour or sedimentation. The procedure for sizing a culvert is summarized below.

A. List design data: Q (cubic feet per second), L (feet), allowable HW (feet), S_o (feet per foot), type of culvert barrel and entrance.

B. Compute $L/(100S_o)$.

C. Enter the appropriate capacity chart with the design discharge, Q.

D. Find the $L/(100S_o)$ value for the smallest pipe that will pass the design discharge. If this value is above the dotted line in Figures 7-3 through 7-10, use the nomographs to check headwater conditions.

E. If the computed $L/(100S_o)$ is less than the value of $L/(100S_o)$ given for the solid line, then the value of HW is the value obtained from the solid line curve. If the computed L/(100S) is larger than the value for the dashed outlet control curve, then special measures must be taken, and the reader is referred to the FHWA publications listed in the bibliography. Check the HW value obtained with the allowable HW. If the indicated HW is greater than the allowable HW, then try the next larger pipe size.

The advantage of the capacity charts (Figures 7-3 through 7-10) over the standard inlet nomographs (Figures 7-11 through 7-18) is that the capacity charts are direct where the nomographs are trial and error. The capacity charts can be used only when the flow reaches critical depth at the outlet.

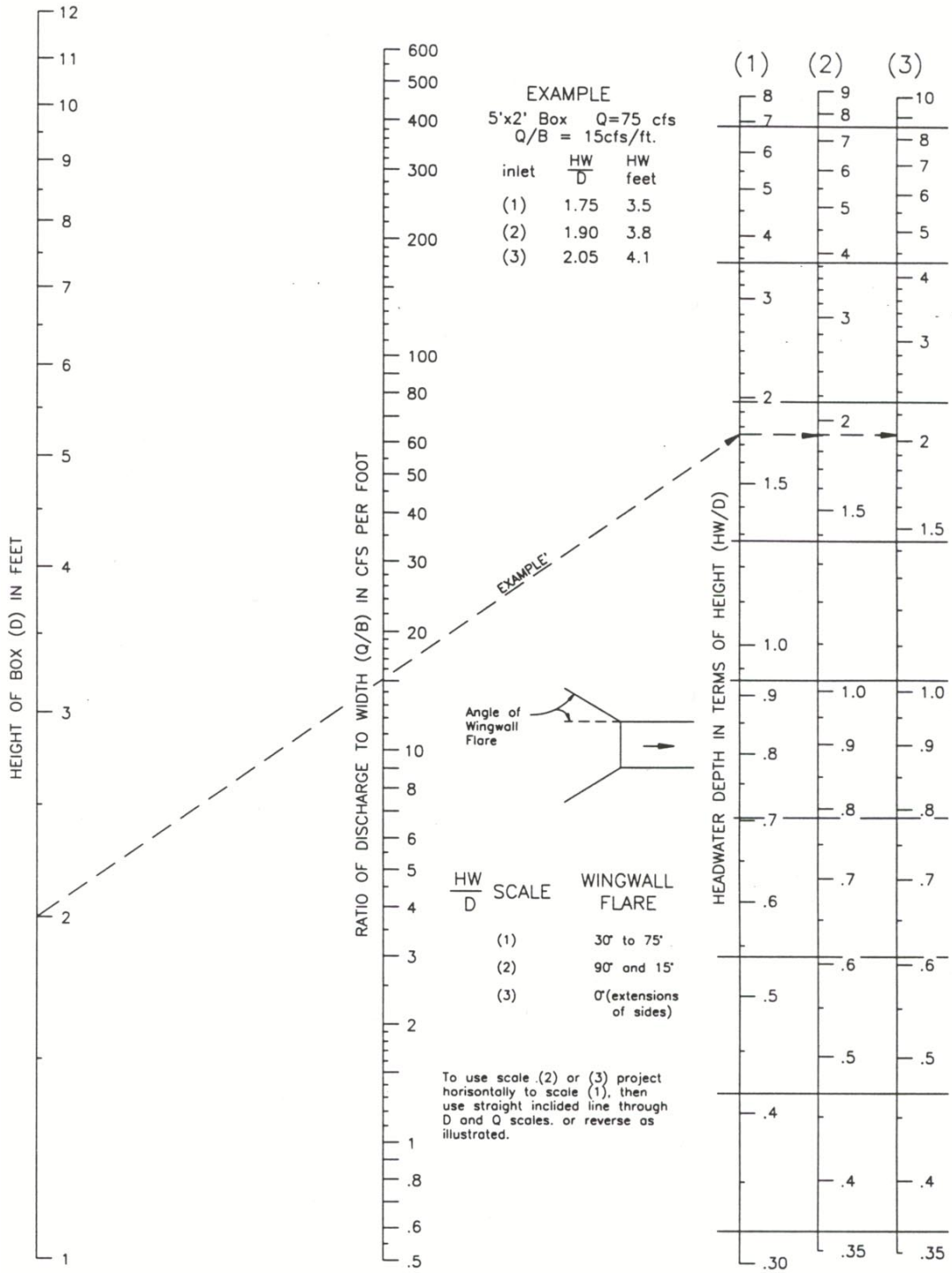

Source: Federal Highway Administration, HDS No. 5, Hydraulic Design of Highway Culverts.

Figure 7-11 Headwater Depth for Box Culverts with Inlet Control

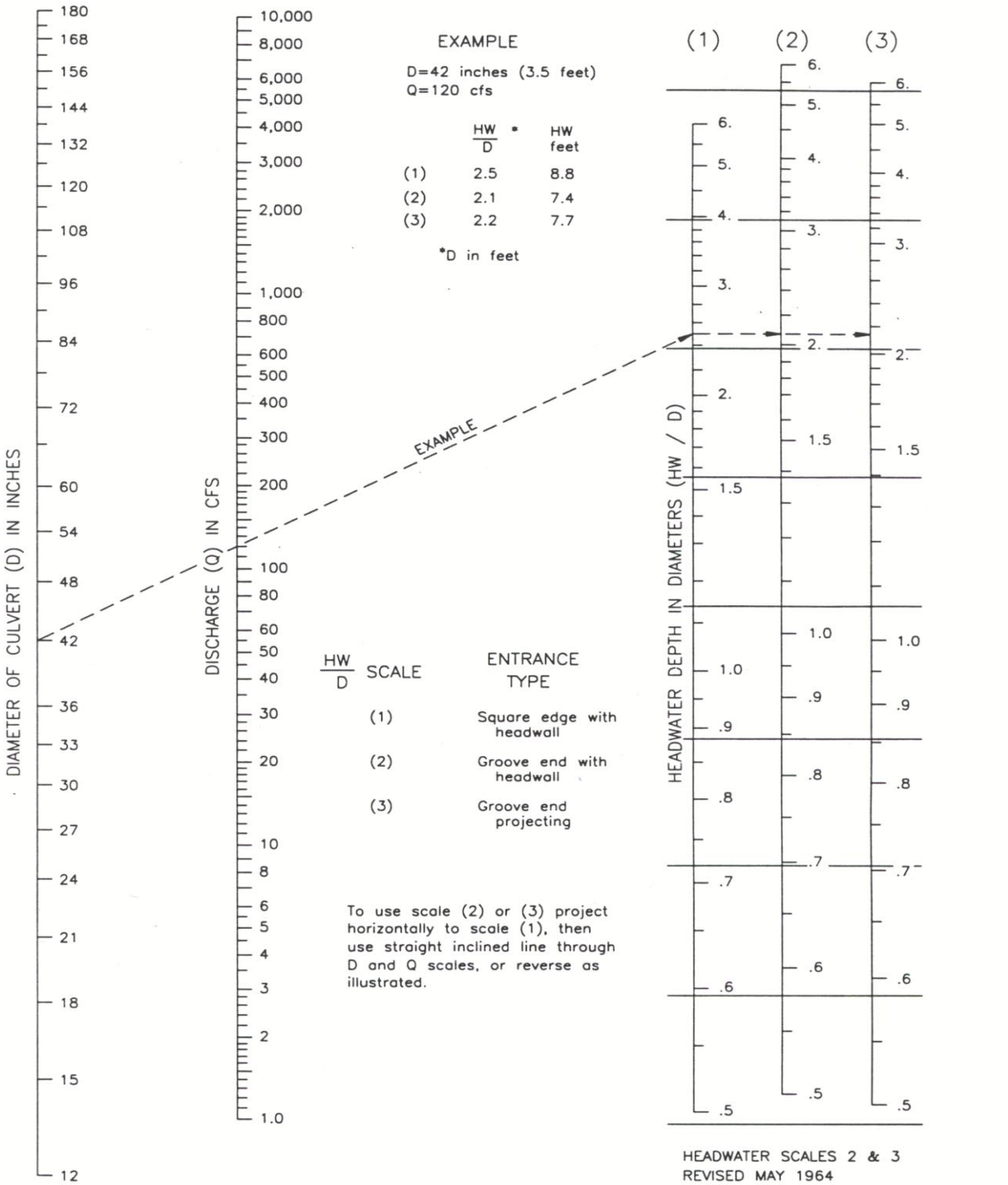

Source: Federal Highway Administration, HDS No. 5, Hydraulic Design of Highway Culverts.

Figure 7-12 Headwater Depth for Concrete Pipe Culverts with Inlet Control

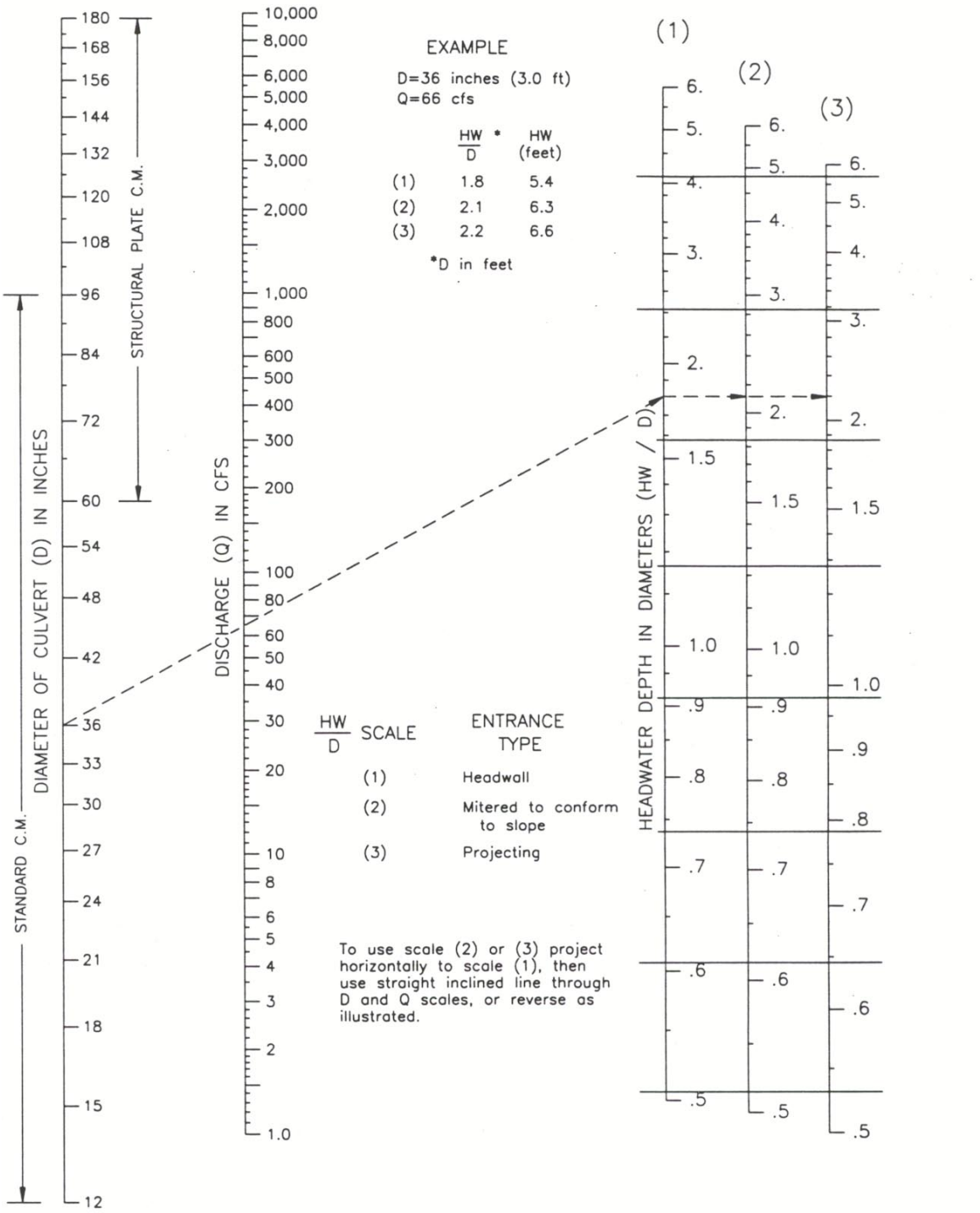

Source: Federal Highway Administration, HDS No. 5, Hydraulic Design of Highway Culverts.

Figure 7-13 Headwater Depth for Corrugated Metal Pipe Culverts with Inlet Control

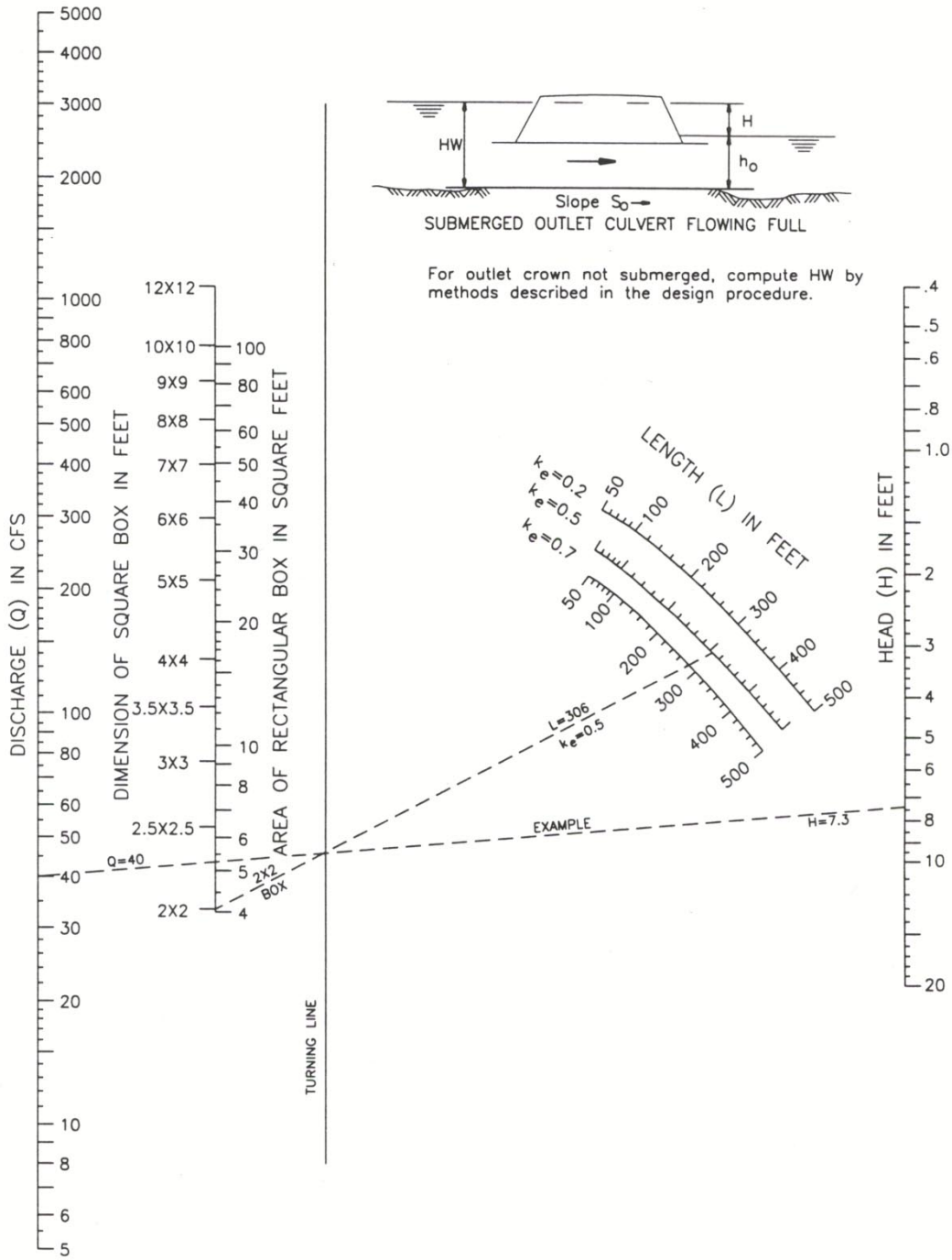

Source: Federal Highway Administration, HDS No. 5, Hydraulic Design of Highway Culverts.

Figure 7-14 Head for Outlet Control Concrete Box Culverts Flowing Full n = 0.012

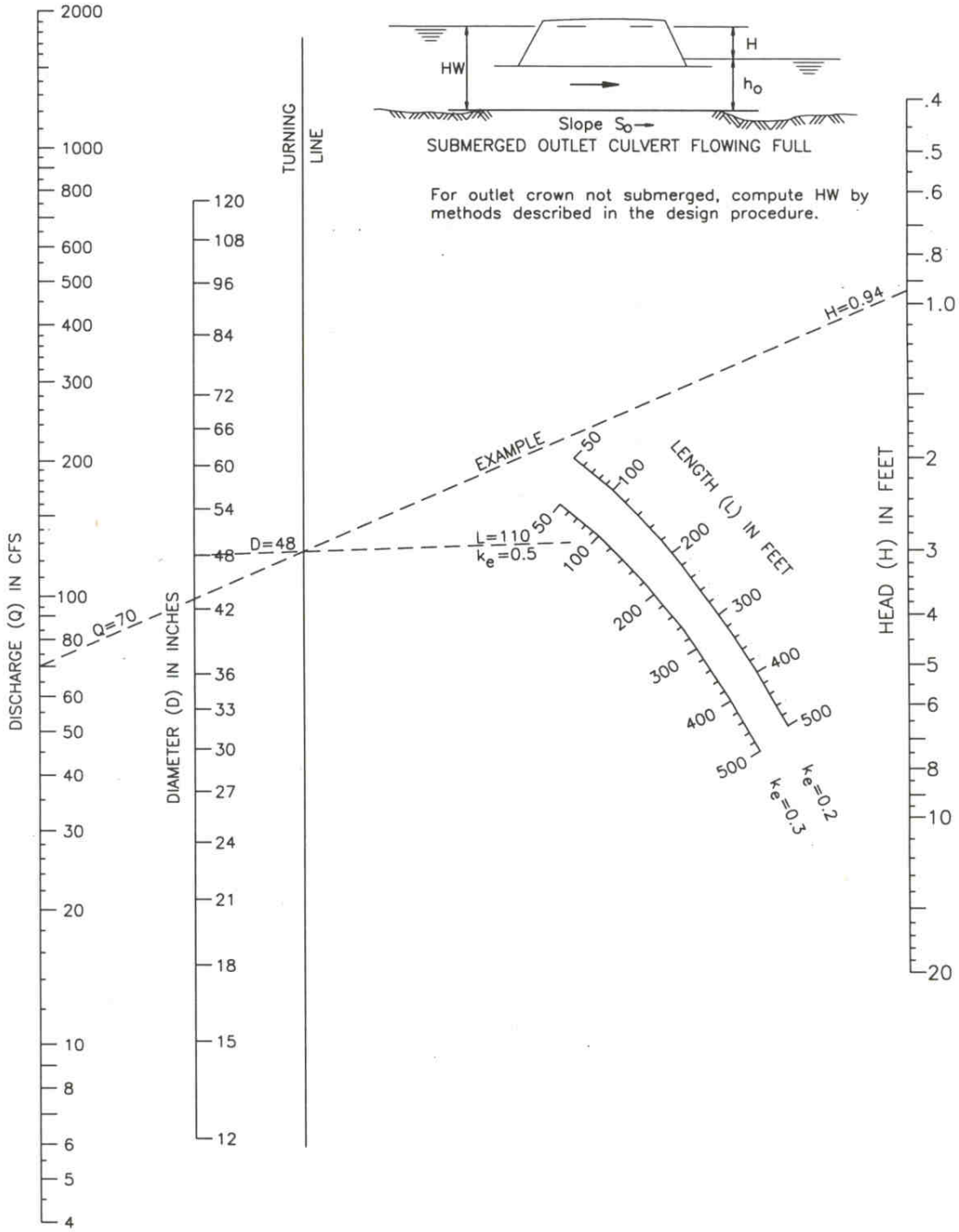

Source: Federal Highway Administration, HDS No. 5, Hydraulic Design of Highway Culverts.

Figure 7-15 Head for Outlet Control Concrete Pipe Culverts Flowing Full n = 0.012

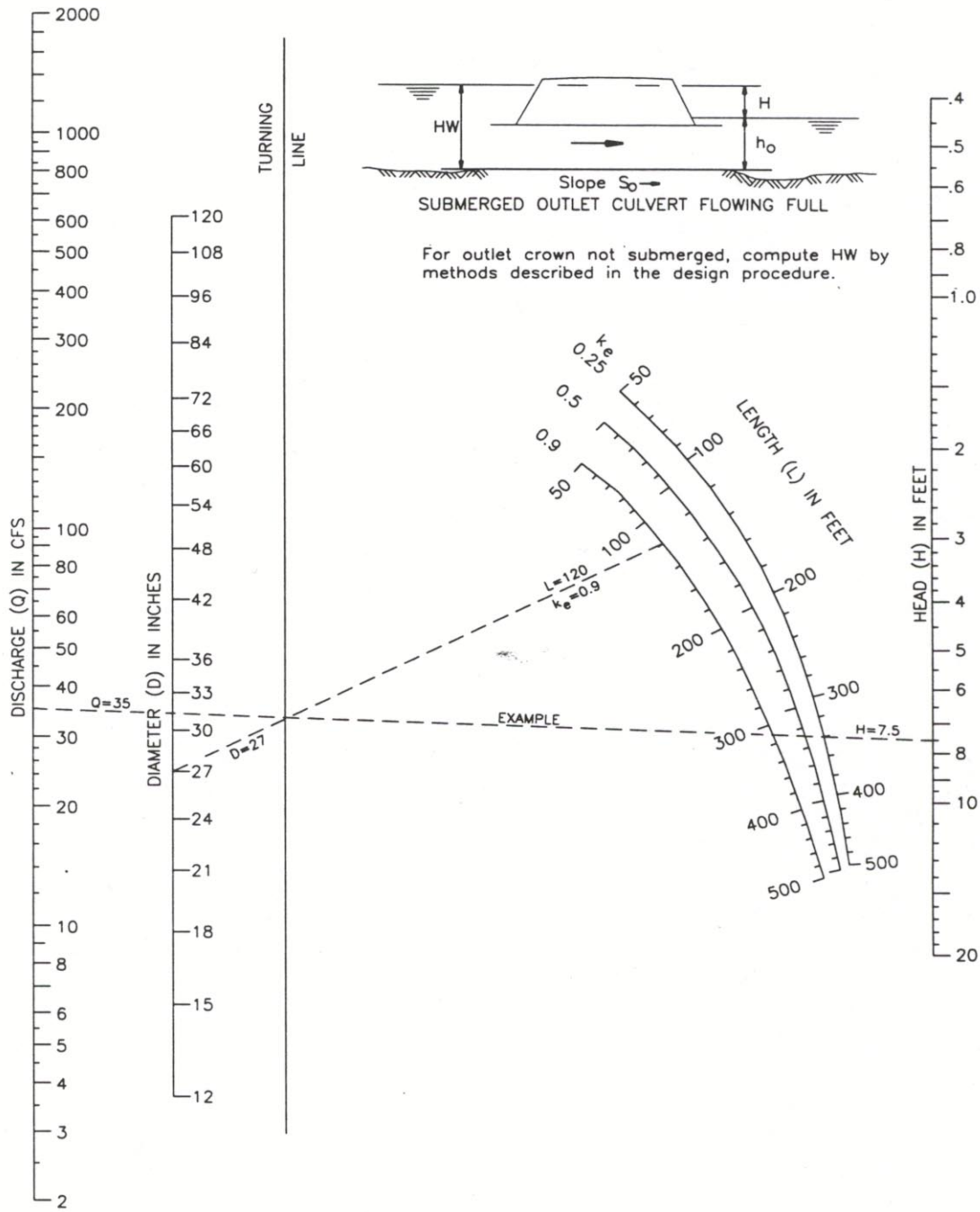

Source: Federal Highway Administration, HDS No. 5, Hydraulic Design of Highway Culverts.

Figure 7-16 Head for Outlet Control Standard Corrugated Metal Culverts Flowing Full n = 0.024

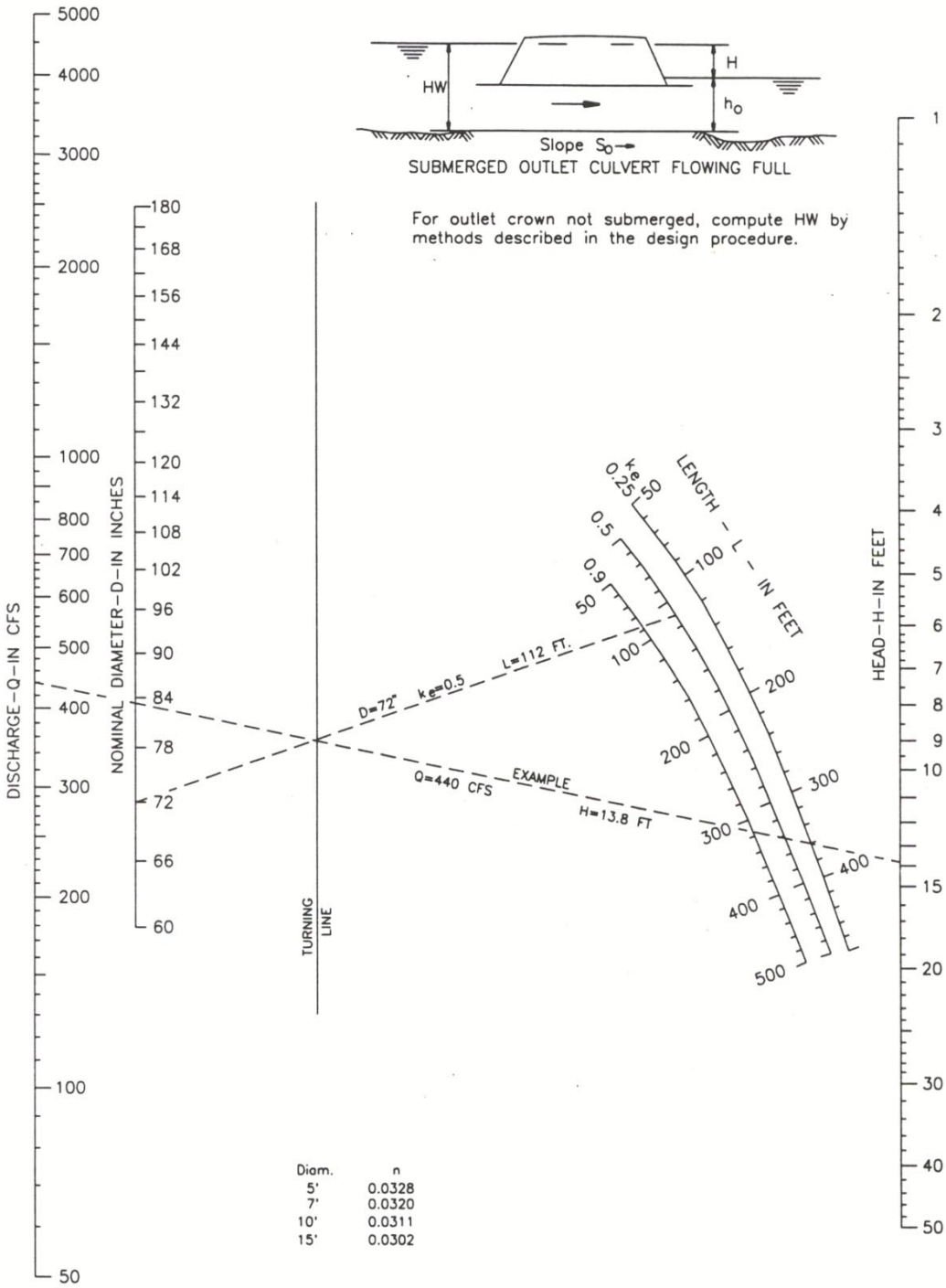

Source: Federal Highway Administration, HDS No. 5, Hydraulic Design of Highway Culverts.

Figure 7-17 Head for Outlet Control Structural Plate Corrugated Metal Pipe Culverts Flowing Full n = 0.0328 to 0.0302

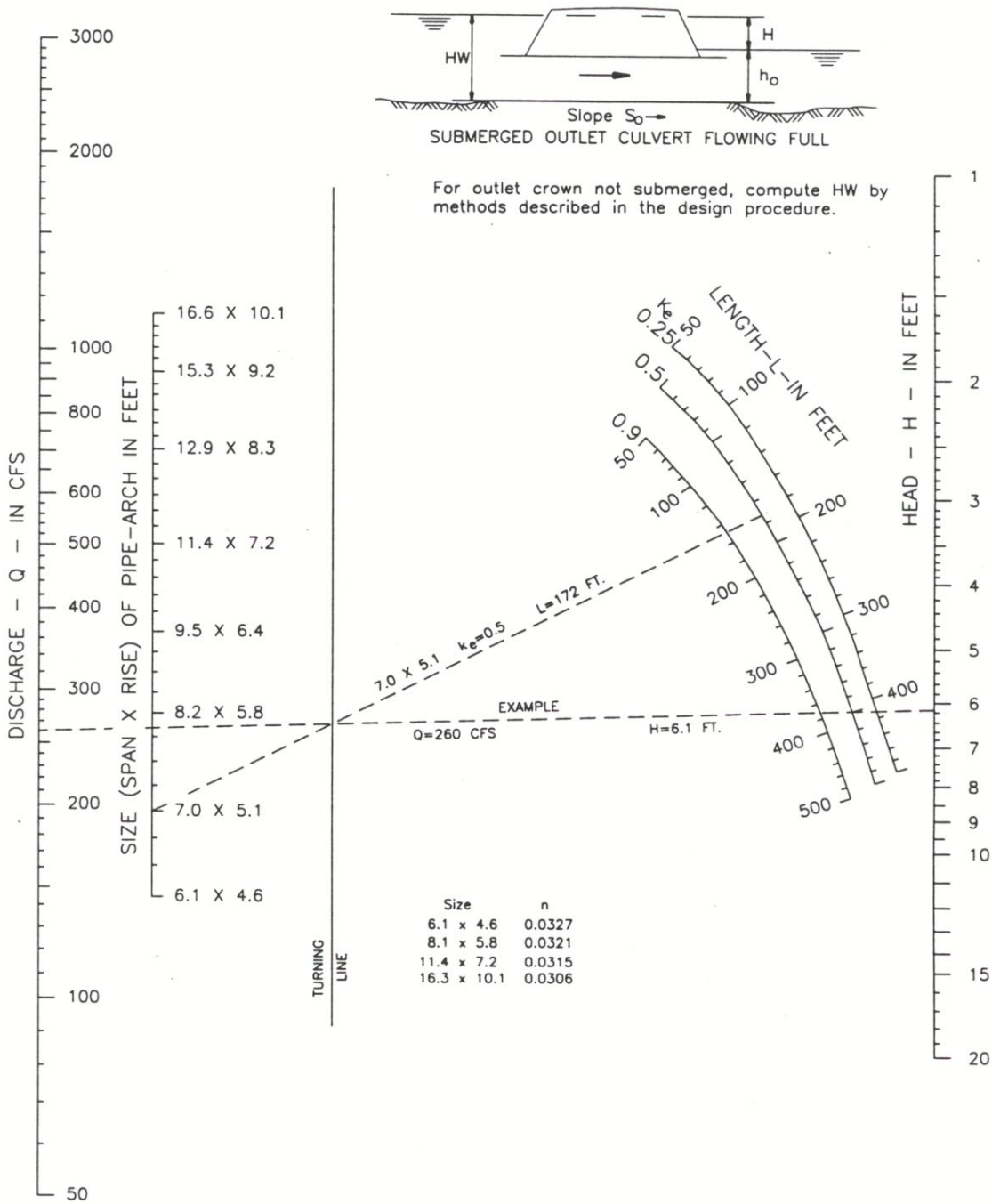

Source: Federal Highway Administration, HDS No. 5, Hydraulic Design of Highway Culverts.

Figure 7-18 Head for Outlet Control Structural Plate Corrugated Metal Pipe Arch Culverts, 18" Corner Radius Flowing Full n = 0.0327 to 0.0306

Critical depth for various culvert sections can be determined using the appropriate curves on Figures 7-19 and 7-20. When the critical depth at the outlet is less than the tailwater depth, the nomographs must be used. However, both methods will provide the same results where either of the two methods is applicable.

Inlet Control

Inlet control calculations determine the headwater elevation required to pass the design flow through the selected inlet control culvert configuration. The approach velocity head may be included as part of the headwater if desired. The inlet control nomograph for standard inlets (Figures 7-11 through 7-13) is used in the design process. Steps A through F outline the proper culvert selection procedure.

A. Locate the selected culvert size and flow rate on the appropriate scales of the inlet control nomograph (note that for box culverts, the flow rate per foot of barrel width is used).

B. Using a straightedge, carefully extend a straight line from the culvert size through the flow rate and mark a point on the first headwater/culvert height (HW/D) scale. The first HW/D scale is also a turning line.

C. If another HW/D scale is required (reflects Entrance Type), extend a horizontal line from the first HW/D scale (the turning line) to the desired scale and read the result.

D. Multiply HW/D by the culvert height, D, to obtain the required headwater (HW) from the invert of the control section to the energy grade line. If the approach velocity is neglected, HW equals the required headwater depth (HW_i). If the approach velocity is included in the calculations, deduct the approach velocity head ($V^2/2g$) from HW to determine HW_i.

E. Calculate the required depression (FALL) of the inlet control section below the stream bed as follows:

$$HW_d = EL_{hd} - EL_{sf} \quad (7\text{-}7)$$

$$FALL = HW_i - HW_d \quad (7\text{-}8)$$

where:

HW_d	=	design headwater depth, in feet
EL_{hd}	=	design headwater elevation, in feet
EL_{sf}	=	elevation of the stream bed at the face, in feet
FALL	=	required depression below the stream bed, in feet
HW_i	=	allowable headwater depth at the inlet, in feet

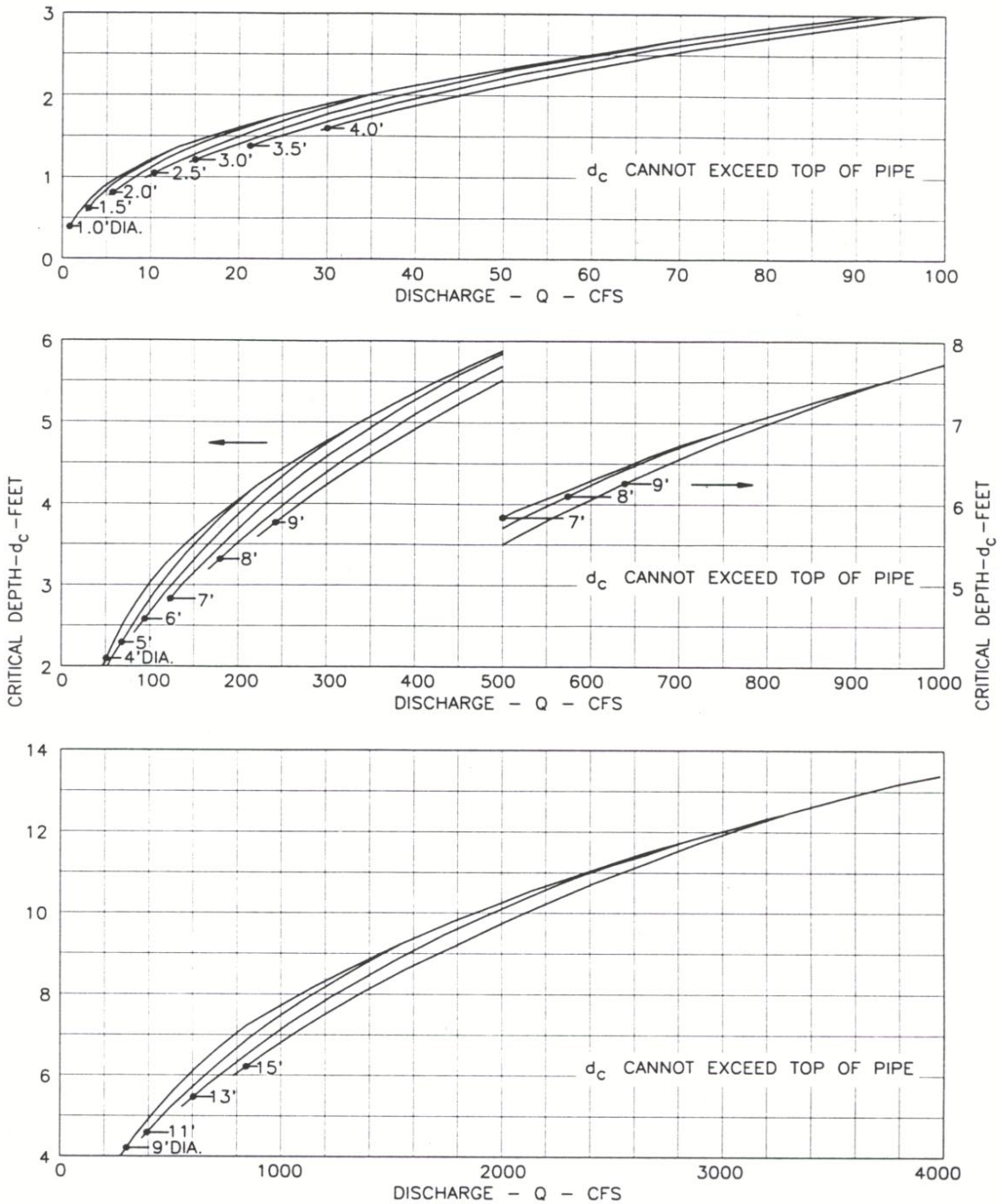

Source: Federal Highway Administration, HDS No. 5, Hydraulic Design of Highway Culverts.

Figure 7-19 Critical Depth, d_c Circular Pipe

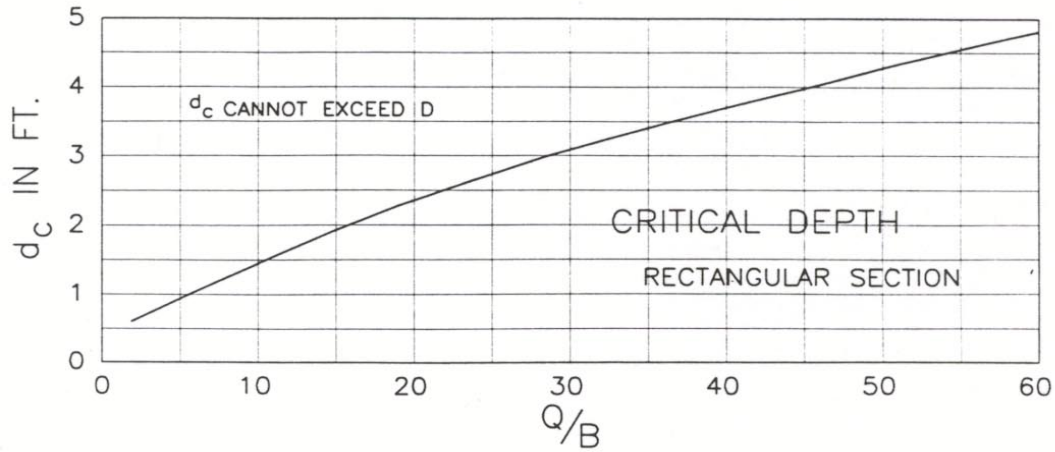

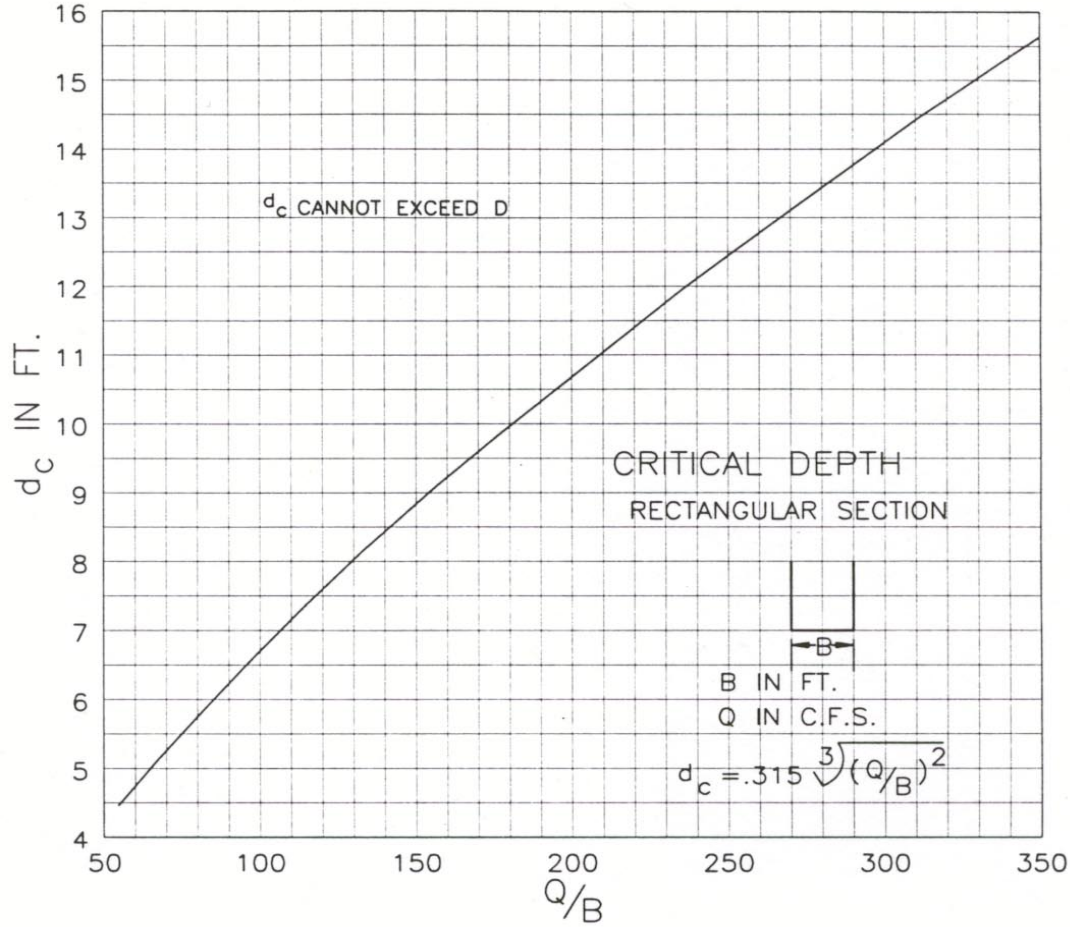

Source: Federal Highway Administration, HDS No. 5, Hydraulic Design of Highway Culverts.

Figure 7-20 Critical Depth, d_c Rectangular Section

Possible results and consequences of this calculation are:

1. If the FALL is negative or zero, set FALL equal to zero and proceed to step F.

2. If the FALL is positive, the inlet control section invert must be depressed below the streambed at the face by a distance equal to the value of the FALL. If the FALL is acceptable, proceed to step F.

3. If the FALL is positive and greater than is judged to be acceptable, select another culvert configuration and begin again at step A.

F. Calculate the inlet control section invert elevation as follows:

$$EL_i = EL_{sf} - FALL \tag{7-9}$$

where:

EL_i	=	the invert elevation at the face of the culvert (EL_f) or at the throat of the culvert with a tapered inlet (EL_t), in feet
EL_{sf}	=	elevation of the stream bed at the face, in feet
FALL	=	required depression below the stream bed, in feet

Outlet Control

Outlet control calculations result in the headwater elevation required to convey the design discharge through the selected outlet control culvert configuration. The approach and downstream velocities may be included in the design process, if desired. Outlet control nomographs and critical depth charts (Figures 7-14 through 7-20) are used in the design process. Steps A through H outline the proper culvert selection procedure.

A. Determine the tailwater depth (TW) above the outlet invert at the design flow rate. This depth may be obtained from backwater or normal depth calculations, or from field observations.

B. Locate the flow rate on the appropriate critical depth chart (Figure 7-19 or Figure 7-20) and read the critical depth (d_c). Critical depth, d_c, cannot exceed the culvert diameter, D. The d_c curves are truncated for convenience when they converge. If an accurate d_c is required for $d_c > 0.9D$, consult the Handbook of Hydraulics, by King and Brater or other hydraulic references.

C. Calculate $(d_c + D)/2$

D. Determine the depth from the culvert outlet invert to the hydraulic grade line elevation (h_o).

h_o = TW or $(d_c + D)/2$, whichever is larger

E. From Table 7-2, obtain the appropriate entrance loss coefficient, k_e, for the culvert inlet configuration.

F. Determine the losses through the culvert barrel, H, using the outlet control nomograph.

1. If the Manning's "n" value given in the outlet control nomograph is different than the Manning's "n" for the culvert, adjust the culvert length using the formula:

$$L_1 = L\left[\frac{n_1}{n}\right]^2 \qquad (7\text{-}10)$$

where:

L_1	=	adjusted culvert length, in feet
L	=	actual culvert length, in feet
n_1	=	desired Manning's "n" value
n	=	Manning's "n" value from the outlet control chart

Then, use L_1 rather than the actual culvert length when using the outlet control nomograph.

2. Using a straightedge, connect the culvert size with the culvert length on the appropriate k_e scale. This intersection defines a point on the turning line.

3. Again using the straightedge, extend a line from the discharge through the point on the turning line to the Head Loss (H) scale. Read H. H is the energy loss through the culvert, including entrance, friction, and outlet losses.

Note: Careful alignment of the straightedge is necessary to obtain good results from the outlet control nomograph.

G. Calculate the required outlet control headwater elevation.

$$EL_{ho}=EL_o+H+h_o \tag{7-11}$$

where:

EL_{ho}	=	required outlet control headwater elevation, in feet
EL_o	=	invert elevation at the outlet, in feet
H	=	total head loss, in feet
h_o	=	depth from the culvert outlet invert to the hydraulic grade line, in feet
	=	TW or $(d_c+D)/2$, whichever is larger

H. If the outlet control headwater elevation exceeds the design headwater elevation, a new culvert configuration must be selected and the process repeated. Generally, a larger barrel will be necessary since inlet improvements are of limited benefit in outlet control.

Evaluation of Results

Compare the headwater elevations calculated for inlet and outlet control for a specific culvert size. The higher of the two is designated the controlling headwater elevation. The culvert can be expected to operate with that higher headwater for at least part of the time.

If the controlling headwater is based on inlet or outlet control, determine the area of flow at the outlet based on the barrel geometry and the following:

A. Critical depth if the tailwater is at or below critical depth;

B. Tailwater depth if the tailwater is between critical depth and the top of the barrel; and

C. The height of the barrel if the tailwater is above the top of the barrel.

Table 7-4 can be used to determine the cross sectional area of a circular pipe flowing partially full. The ratio of d/D is the depth of water to the diameter of the pipe. The cross sectional area can be calculated with Equation 7-12.

$$A = C_a D^2 \tag{7-12}$$

where:

A	=	cross sectional area of pipe flowing partially full, in square feet
C_a	=	cross sectional area coefficient, Table 7-4
D	=	diameter of pipe, in feet

TABLE 7-4
CROSS SECTIONAL AREA COEFFICIENTS, C_a,
FOR A CIRCULAR CONDUIT FLOWING PARTIALLY FULL

d/D	0.00	0.01	0.02	0.03	0.04	0.05	0.06	0.07	0.08	0.09
0.0	0.0000	0.0013	0.0037	0.0069	0.0105	0.0147	0.0192	0.0242	0.0294	0.03500.
0.1	0.0409	0.0470	0.0534	0.0600	0.0668	0.0739	0.0811	0.0885	0.0961	1039
0.2	0.1118	0.1199	0.1281	0.1365	0.1449	0.1535	0.1623	0.1711	0.1800	0.1890
0.3	0.1982	0.2074	0.2167	0.2260	0.2355	0.2450	0.2546	0.2642	0.2739	0.2836
0.4	0.2934	0.3032	0.3130	0.3229	0.3328	0.3428	0.3527	0.3627	0.3727	0.3827
0.5	0.393	0.403	0.413	0.423	0.433	0.443	0.453	0.462	0.472	0.482
0.6	0.492	0.502	0.512	0.521	0.531	0.540	0.550	0.559	0.569	0.578
0.7	0.587	0.596	0.605	0.614	0.623	0.632	0.640	0.649	0.657	0.666
0.8	0.674	0.681	0.689	0.697	0.704	0.712	0.719	0.725	0.732	0.738
0.9	0.745	0.750	0.756	0.761	0.766	0.771	0.775	0.779	0.782	0.784

d = Depth of water, in feet
D =Diameter of pipe, in feet
Source: King and Brater, Handbook of Hydraulics.

Repeat the design process until an acceptable culvert configuration is determined. Once the culvert is selected, it must be fitted into the roadway cross section. The culvert must have adequate cover and the headwalls and wingwalls dimensions must be designed.

If outlet control governs and the headwater depth (referenced to the inlet invert) is less than 1.2D, it is possible that the barrel flows partially full through its entire length. In this case, caution should be used in applying the Approximate Method of setting the downstream elevation based on the greater of tailwater or $(d_c + D)/2$. If an accurate headwater depth is necessary, backwater calculations should be used to check the result from the Approximate Method. If the headwater depth falls below 0.75D, the Approximate Method should not be used.

If the selected culvert will not fit the site, return to the culvert design process and select another culvert. If neither tapered inlets nor flow routing methods are applied, document the design process in detail. Designs shall be accompanied by a performance curve that displays culvert behavior over a range of discharges.

7.5.2 Design Procedure

Due to challenges arising from topography and other considerations, the actual design of a culvert is more complex than a simple culvert sizing. This procedure is intended to guide and streamline the design, even though the situations encountered are too varied and unique to be generalized. However, the presented procedure should be utilized to ensure that some special issue is not overlooked or omitted.

Design Computation Forms

The Culvert Design Form, Figure 7-21, has been formulated to guide the design process. Summary blocks are provided at the top of the form for the project description, and the designer's identification. Summaries of hydrologic data are also included. At the top right of the page is a small sketch of the culvert with blanks for inserting important dimensions and elevations.

The central portion of the design form contains lines for inserting the trial culvert description and calculating the inlet control and outlet control headwater elevations. Space is provided at the lower center for comments and at the lower right for a description of the culvert barrel selected.

The first step in the design process is to summarize all known data for the culvert at the top of the appropriate design form. This information should be collected or calculated prior to performing the actual culvert design. The next step is to select a preliminary culvert material, shape, size, and entrance type. The designer then enters the design flow rate and proceeds with the inlet control calculations.

Invert Elevations

After determining the allowable headwater elevation, the tailwater elevation, and the approximate length, invert elevations must be determined. Scour is not likely to occur in an artificial channel when the culvert has the same slope as the channel. To reduce the chance of failure due to scour, invert elevations corresponding to the natural grade should be used first. The flow velocity in the upstream channel should be determined to support the scour analysis.

Culvert Size and Shape

After the invert elevations have been established, proceed with culvert size and shape design. Use the computation forms, the capacity charts, and the nomographs to determine the barrel size (pipe diameter or size of box culvert) that will meet the headwater requirements. The smallest diameter that appears in the nomographs and capacity charts is 12 inches.

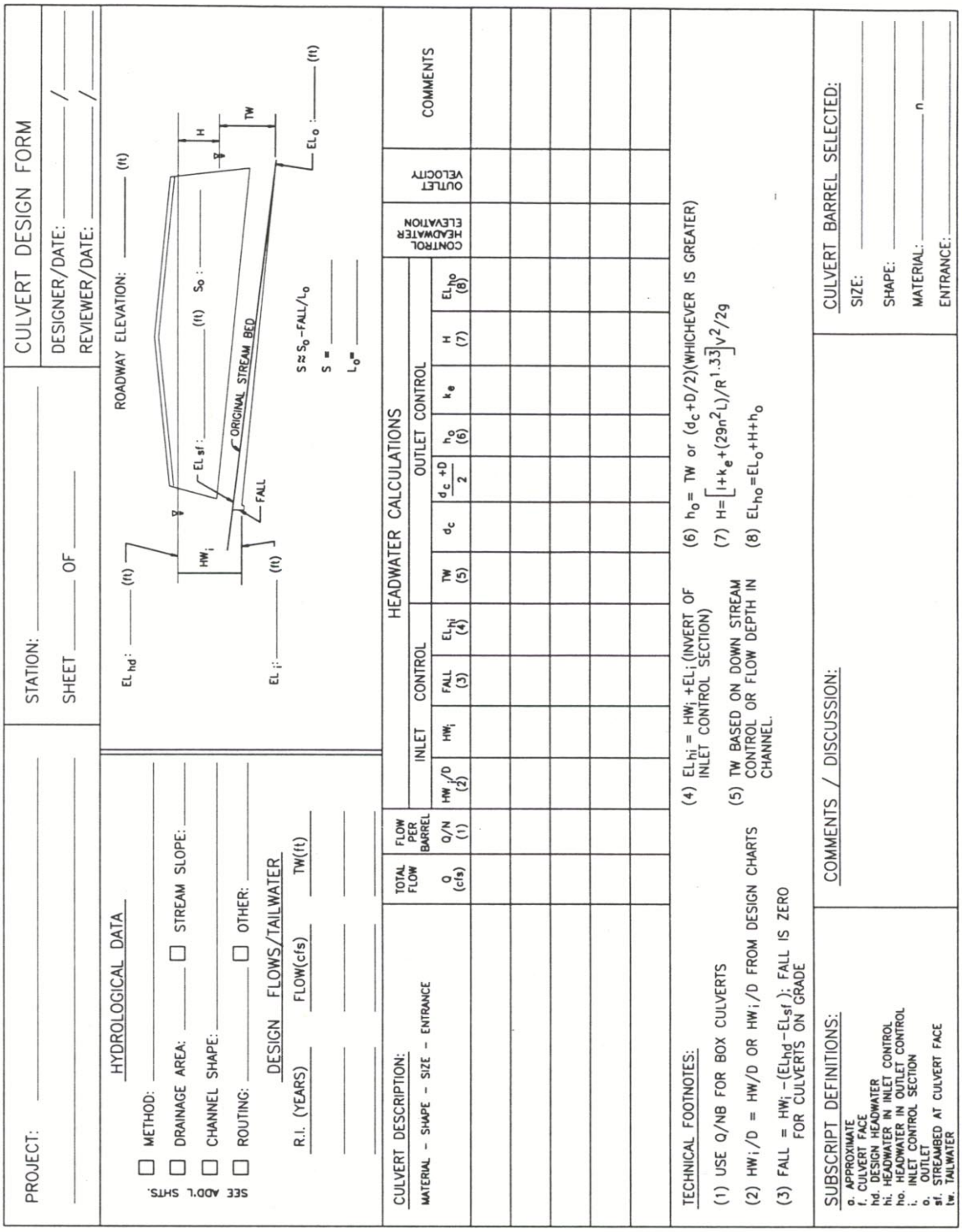

Source: Federal Highway Administration, HDS No. 5, Hydraulic Design of Highway Culverts.

Figure 7-21 Culvert Design Form

Limited Headwater

If there is insufficient headwater elevation to obtain the required discharge, increase the size of the culvert barrel, lower the inlet invert, use an irregular cross section, or use any combination of the above.

If the inlet invert is lowered, special consideration must be given to scour. The use of gabions, concrete drop structure, riprap, and headwall with apron and toe walls should be investigated and compared to design a culvert with stable inlet structure.

Culvert Outlet

The outlet velocity must be checked against the permissible velocities of the downstream channel to determine if excessive scour is likely to occur. If scouring is likely, then riprap, an expanding end section, or an engineered energy dissipater should be used.

Minimum Slope

To prevent sediment from obstructing the culvert, the culvert slope must be equal to or greater than the slope required maintaining a minimum velocity of 2.5 feet per second for design flow unless it is otherwise governed by other regulations, such as those mentioned Section 7.2.2 Culvert Discharge Velocity. The design slope should be checked, and, if the required minimum velocity is not obtained, the design must be adjusted. The suggested adjustment methods include decreasing the pipe diameter, increasing the culvert slope, selecting a smoother pipe material, or any combination of the above.

Example 1: Pipe Culvert

Given: Design Discharge, Q_{100} = 200 cubic feet per second

Allowable Headwater Elevation = 108.0 feet

Shoulder Elevation = 111 feet

Elevation Inlet Invert = 100 feet

Culvert Length, L_a = 200 feet

Downstream channel approximates a 5-foot wide trapezoidal channel with 1.5H:1V side slopes, a Manning's "n" of 0.04, and S_o = 0.01 feet per foot

Find: Design a circular corrugated metal pipe with standard $2^2/_3$–inch by $^1/_2$-inch corrugations and a concrete pipe with a groove end. Set the inlet invert at streambed elevation.

Note: Use Figures 7-12, 7-13, 7-15, 7-16 and 7-19 and Design Form, Figure 7-21.

PROJECT: EXAMPLE PROBLEM No. 1

STATION: 1+00

SHEET 1 OF 1

CULVERT DESIGN FORM

DESIGNER / DATE: LAC / 7/18

REVIEWER / DATE: DES / 7/19

HYDROLOGICAL DATA

SEE ADD'L SHTS.

- ☐ METHOD: RATIONAL
- ☐ DRAINAGE AREA: 125 AC. ☐ STREAM SLOPE: 1.0%
- ☐ CHANNEL SHAPE: TRAP, bw = 5', n = 0.04, 1.5H:1V
- ☐ ROUTING: N/A ☐ OTHER:

DESIGN FLOWS/TAILWATER

R.I. (YEARS)	FLOW (cfs)	TW (ft)
100	200	3.5

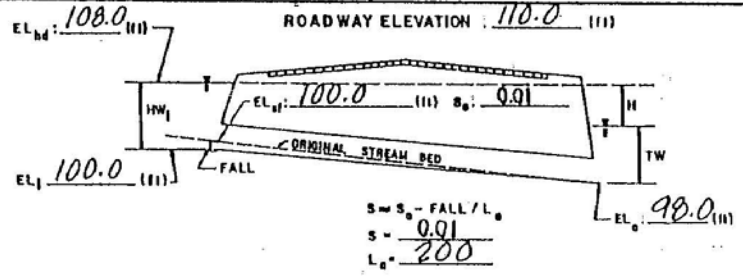

CULVERT DESCRIPTION: MATERIAL - SHAPE - SIZE - ENTRANCE	TOTAL FLOW Q (cfs)	FLOW PER BARREL Q/N (1)	HEADWATER CALCULATIONS: INLET CONTROL HW_i/D (2)	HW_i	FALL (3)	EL_hi (4)	OUTLET CONTROL TW (5)	d_c	(d_c+D)/2	h_o (6)	k_e	H (7)	EL_ho (8)	CONTROL HEADWATER ELEVATION	OUTLET VELOCITY	COMMENTS
C.M.P.-CIRC.-72IN.-SQUARE EDGE	200	200	1.01	6.1	-	106.1	3.5	3.9	4.9	4.9	0.5	2.8	105.7	106.1	11.2	TRY 60" C.M.P.
" - " -60IN.- " "			1.50	7.50	-	107.5		4.0	4.5	4.5	0.5	6.8	109.3	109.3	15.1	TRY 60" CONC.
CONC.- " -60IN.- GROOVE END			1.36	6.8	-	106.8			4.5	4.5	0.2	2.9	105.4	106.8	17.4	TRY 54" CONC.
" - " -54IN.- "			1.77	7.97	-	108.0			4.3	4.3	0.2	4.7	107.0	108.0	19.2	OK

TECHNICAL FOOTNOTES:

(1) USE Q/NB FOR BOX CULVERTS

(2) HW_i/D = HW/D OR HW_i/D FROM DESIGN CHARTS

(3) FALL = $HW_i - (EL_{hd} - EL_{sf})$; FALL IS ZERO FOR CULVERTS ON GRADE

(4) $EL_{hi} = HW_i + EL_i$ (INVERT OF INLET CONTROL SECTION)

(5) TW BASED ON DOWN STREAM CONTROL OR FLOW DEPTH IN CHANNEL.

(6) h_o = TW or $(d_c + D/2)$ (WHICHEVER IS GREATER)

(7) $H = \left[1 + k_e + (29 n^2 L)/R^{1.33}\right] V^2/2g$

(8) $EL_{ho} = EL_o + H + h_o$

SUBSCRIPT DEFINITIONS:

a. APPROXIMATE
f. CULVERT FACE
hd. DESIGN HEADWATER
hi. HEADWATER IN INLET CONTROL
ho. HEADWATER IN OUTLET CONTROL
i. INLET CONTROL SECTION
o. OUTLET
sf. STREAMBED AT CULVERT FACE
tw. TAILWATER

COMMENTS / DISCUSSION:

HIGH OUTLET VELOCITY - OUTLET PROTECTION OR LARGER CONDUIT MAY BE NECESSARY

CULVERT BARREL SELECTED:

SIZE: 54 IN.

SHAPE: CIRCULAR

MATERIAL: CONC. n 0.012

ENTRANCE: GROOVE END

7.6 BRIDGE HYDRAULIC DESIGN

Bridges are often required to cross open urban channels; therefore, sizing the bridge openings is of paramount importance. When large culverts are used in lieu of bridges, the design approach often differs. Open channels with improperly designed bridges are susceptible to either excessive scour or deposition, and may not be able to convey the design flow.

7.6.1 Design Approach

Designing bridge openings includes water surface profile and hydraulic gradient analyses of the channel during the major storm. Once this hydraulic gradient is established without the bridge, the maximum allowable effect of the bridge (backwater) on the channel flow and current floodplain regulations should be determined.

Scour is the result of the erosive action of running water loosening and transporting material from the streambed and banks. Local scour is restricted to a minor part of the width of a channel and occurs around piers, abutments, spurs, and embankments. It is caused by the acceleration of the flow and the development of vortexes induced by the obstruction to the flow. The FHWA publication, HEC-18, Evaluating Scour at Bridges, outlines the procedure to evaluate scour at bridges.

7.6.2 Bridge Opening Freeboard

The distance between the design flow water surface elevation and the bottom of the bridge deck (bridge low cord) is called freeboard, which varies for all bridges according to the roadway and bridge design. The bridge design may require the freeboard to be several feet high. Potential obstructions must be considered in setting the freeboard height. Rules cannot simplify the design process; every bridge must be studied individually.

In certain cases, the design professional might choose to intentionally cause ponding upstream from the bridge to reduce downstream peak flows during the storms generating flows greater than the major design storm event. In these cases, no freeboard would be allowed. This design approach is used when downstream areas are highly developed, and the upstream areas have open space or parks adjacent to the channel. However, the elevation due to the ponding behind the bridge shall not come within 2 feet of the finished floor elevation of upstream buildings.

7.7 BRIDGE HYDRAULIC ANALYSIS

Backwater caused by the bridge must be calculated during the bridge design process. The bridge-affected water surface elevations may be higher than water surface elevations for unobstructed flow in the natural channel profile. The standard step method for backwater computations can be used to compute the water surface profile. The computations begin at one end of the study reach and proceed cross section by cross section to the other end of the study reach. The standard step method involves the solution of the dynamic equation of gradually varied flow. This method is discussed in Open Channel Hydraulics by Chow. At bridge crossings where the flow hydraulics are more

complex, momentum and other equations may be used to compute the changes in water surface elevation.

Many computer programs may be used to compute water surface profiles. Two widely used programs are HEC-RAS and WSPRO. HEC-RAS, Water Surface Profiles was developed by the USACE. Water Surface Profile Computations (WSPRO) was developed by the United States Geological Survey (USGS) for the FHWA. The use of HEC-RAS or WSPRO is recommended for bridge hydraulic analysis.

7.7.1 HEC-RAS Model

The HEC-RAS, Water Surface Profiles, computer program is used to analyze backwater effects from bridge waterways. The methodology incorporated into HEC-RAS is based on several simplifying assumptions, but the model produces satisfactory results in many applications. The assumptions are as follows: (1) steady flow; (2) gradually varied flow; (3) one-dimensional flow with correction for horizontal velocity distribution; (4) small channel slope; (5) friction slope (averaged) constant between two adjacent cross sections, and; (6) rigid boundary conditions.

HEC-RAS is intended for calculating water surface profiles for steady state gradually varied flow in natural or man-made channels. Both subcritical and supercritical flow profiles can be calculated. The effects of various structures such as bridges, culverts, weirs, and objects in the floodplain may be considered in the computations. The computational procedure is based on the solution of the one-dimensional energy equation with energy loss due to friction evaluated with Manning's Equation. HEC-RAS is also designed for application in floodplain management and flood insurance studies to evaluate floodway encroachments. Also, the program is a useful tool for assessing the effects of channel improvements and levees on water surface profiles.

HEC-RAS computes energy losses caused by structures such as bridges and culverts in two parts. One part consists of the losses that occur in reaches immediately upstream and downstream from the bridge where contraction and expansion of the flow is taking place. The second part consists of losses at the structure itself and is calculated with the normal bridge method, special bridge method, or the special culvert option.

The bridge routines in HEC-RAS allow the modeler to analyze a bridge with several different methods without changing the bridge geometry. The bridge routines have the ability to model low flow (Class A, B, and C), low flow and weir flow (with adjustments for submergence), pressure flow (orifice and sluice gate equations), pressure and weir flow, and high flows with the energy equation only. The model allows for multiple bridge and/or culvert openings at a single location.

The culverts hydraulics in HEC-RAS is based on the FHWA standard equations from the publication HDS-5, Hydraulic Design of Highway Culverts. The culvert routines include the ability to model circular, box, elliptical, arch, pipe arch, low profile arch, high profile arch, and semi circular culverts. The HEC-RAS program has the ability to model multiple culverts at a single

location. The culverts can have different shapes, sizes, elevations, and loss coefficients. The user can also specify the number of identical barrels for each culvert type.

The culvert option is a new feature in Version 4.5. The FHWA standard equations for culvert hydraulics are used to compute losses through single or multiple barrel structures.

7.7.2 WSPRO Model

The FHWA contracted with the USGS to develop an improved water surface profile computation program. WSPRO is a digital model for water surface profile computations for open-channel flow and is compatible with conventional techniques used in existing step-backwater analysis models. WSPRO incorporates several desirable features from existing models. Profile computations for free-surface flow through bridges are based on relatively recent developments in bridge backwater analysis and recognize the influence of bridge geometry variations. Pressurized flow situations (girders partially or fully inundated) are computed using existing Federal Highway Administration techniques. Embankment overtopping flows, in conjunction with either free-surface or pressurized flow through the bridge, can be computed. WSPRO is also capable of computing profiles at stream crossings with multiple openings (including culverts). WSPRO is recommended when performing scour computations.

Although specifically oriented towards hydraulic design of stream highway crossings, WSPRO is equally suitable for water surface profile computations unrelated to highway design.

7.8 LIST OF SYMBOLS

The following is a list of symbols used in Section 7 of this Article, their corresponding units and a brief description of the symbol.

TABLE 7-5

LIST OF SYMBOLS

Symbol	Units	Description
A_b	sq ft	Area of bend section of slope-tapered inlets
H_f	ft	Depth of pool, or head, above the face section invert
H_t	ft	Depth of pool, or head, above the throat section invert
HG Line	ft	Hydraulic grade line
HW	ft	Headwater elevation; subscript indicates control section (HW, as used in HDS-5, is a depth and is equivalent to H_f)
HW_c	ft	Headwater elevation required for flow to pass crest in crest control
HW_f	ft	Headwater elevation required for flow to pass face section in face control
HW_o	ft	Headwater elevation required for culvert to pass flow in outlet control
HW_t	ft	Headwater elevation required for flow to pass throat section in throat control
h_e	ft	Entrance head loss
h_f	ft	Friction head loss
h_o	ft	Elevation of equivalent hydraulic grade line referenced to the outlet invert
k_e		Entrance energy loss coefficient
k_b		A dimensionless effective pressure term for bend section control
k_t		A dimensionless effective pressure term for inlet throat control
L_a	ft	Approximate total length of culvert, including inlet face section control
L_1, L_2, L_3, L_4	ft	Dimensions relating to the improved inlet as shown in sketches of the different types of inlets
N		Number of barrels
n		Manning's roughness coefficient
P	ft	Length of depression
Q	cfs	Rate of flow
R	ft	Hydraulic radius = Area/Wetted Perimeter
S	ft/ft	Slope of culvert barrel
S_c	ft/ft	Slope of natural channel producing critical discharge
S_e	ft/ft	Slope of embankment
S_f	ft/ft	Slope of FALL for slope-tapered inlets (a ratio of horizontal to vertical)
S_n	ft/ft	Friction slope
S_o	ft/ft	Slope of natural channel
T	ft	Depth of the depression
Taper	ft/ft	Sidewall flare angle (also expressed as the cotangent of the flare angle)
TW	ft	Tailwater depth at outlet of culvert referenced to outlet invert elevation
V	ft/sec	Mean velocity of flow
V_c	ft/sec	Critical velocity
W	ft	Width of weir crest for slope-tapered inlet with mitered face
W	ft	Top width of depression
y	ft	Difference in elevation between crest and face section of a slope-tapered inlet with mitered face

SECTION 8
HYDRAULICS OF DETENTION

Page

LIST OF FIGURES

8.1 INTRODUCTION

On-site runoff detention is one option for managing urban stormwater. Detention involves collecting, storing, and slowly releasing increased runoff due to development before it enters the main drainage system. This stormwater management technique can often be an effective and economical means of reducing peak flow rates (preventing flooding and channel erosion) and mitigating water quality problems (removing pollution and preventing siltation). Large detention facilities that serve multiple developments are generally preferable to small individual on-site facilities that only serve one subdivision or office complex.

The Stormwater Management Plan for the City identifies detention alternatives to manage runoff under various development conditions. For specific types of development, special requirements may necessitate the modification of detention facility design. These facilities will have some water quality aspects that will need to be considered. Depending upon the measure chosen, the detention method may need to combine other treatment methods to achieve water quality goals. Proposed detention structures that are not addressed in the Stormwater Management Plan must be approved by the City. Section 10 Water Quality provides additional background on the adaptation of detention facilities for water quality concern. The design professional should review Section 10 Water Quality and its references for design guidelines for the incorporation of water quality control into a detention facility.

This section emphasizes the quantitative benefits of the use of detention structures to control the peak discharge to downstream areas. Related design methods and procedures for these structures are included.

8.2 DETENTION BASIN DESIGN CRITERIA

The detention basin is the most widely used detention measure for attenuating peak discharges from urbanizing areas. Basins can be designed to fit a variety of sites and incorporate multiple outlets to meet requirements for multi-frequency control of flow. Figure 8-1, on page 8-3, shows a schematic of a typical stormwater detention basin.

If the stormwater management facility includes a permanent pool of water, it is commonly known as a wet detention basin. The permanent pool provides water quality control through sedimentation and the additional pool provides for peak flow control of stormwater runoff. Wet detention basins should have a minimum contributing drainage area of 10 acres. If groundwater is present, the design can be adapted for wet detention. Wet detention basin should be constructed offline of any stream to avoid regulatory requirements and subsequent mitigation.

Safety

Detention basins shall be designed to minimize the chance of accidental injury to any person coming in contact with the system. Safety considerations for stormwater drainage system components must be evaluated during the design process. The use of fencing around detention basins shall be considered by the design professional on case-by-case basis. A safety bench shall be incorporated around the perimeter of the detention basin to prevent accidental falls into the basin and for stability of facility and ease of maintenance. The safety bench shall consist of a 10-foot width with slopes no greater than 6H:1V. The area may be temporarily inundated during major storms but should remain dry for minor storms.

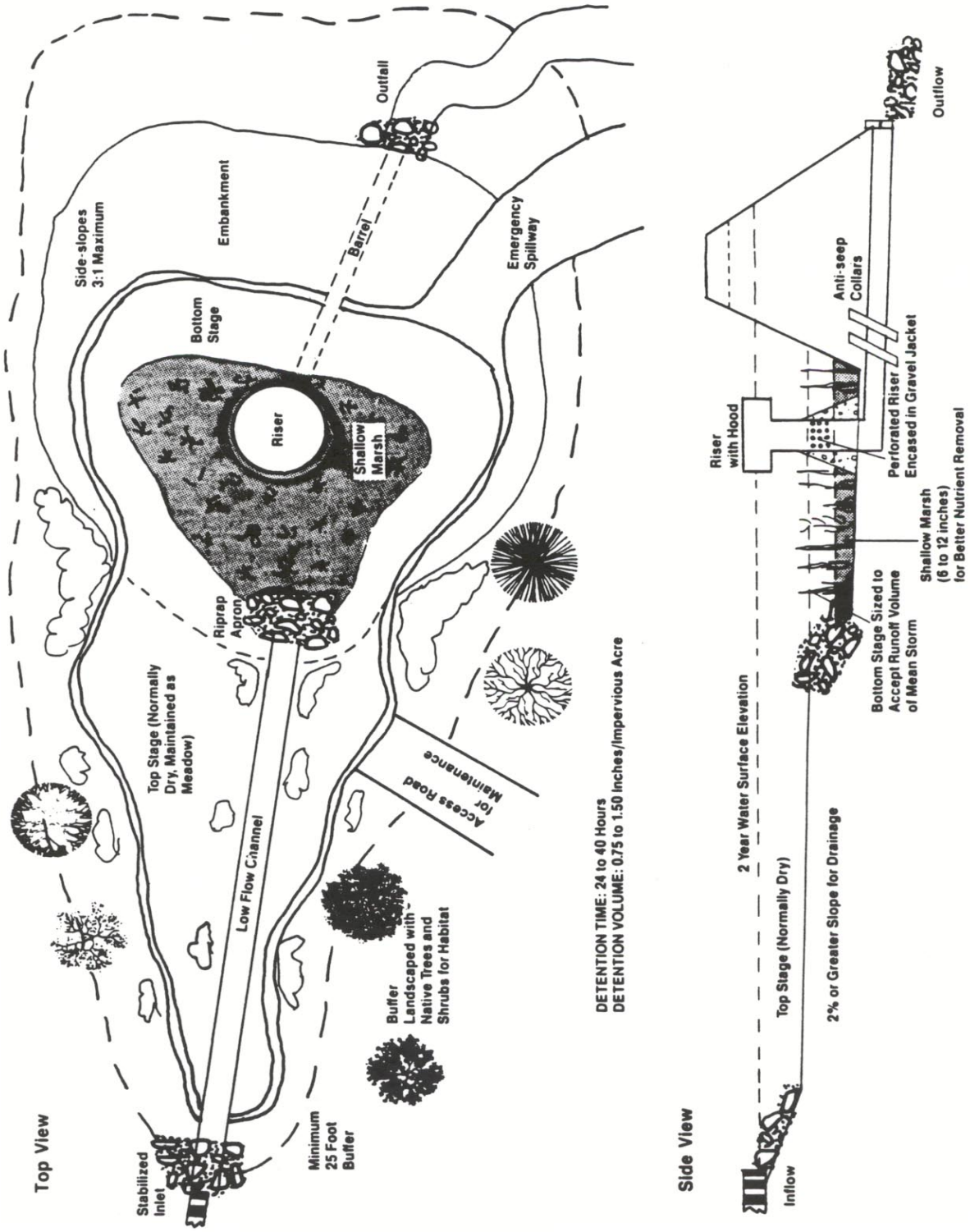

Figure 8-1 Schematic of Stormwater Detention Pond Design Features

Embankment

Depending on the site conditions, the detention volume may be created by excavating the required volume. The embankment is most frequently comprised of an earthen dam, but rock and concrete structures are also used. The earthen dam is preferred for the City and use of any other method requires the City approval prior to design. The maximum slope of 3H:1V should be used on the embankments to allow maintenance equipment to maintain ground cover. The construction of the embankment, depending on storage volume, dam height, and downstream hazard potential, may be classified as a dam, and therefore, a subject to the Dam Safety Law from 1967 (Dam Safety). It is the design professional's responsibility to determine if the detention structure is subject to this law. Refer to North Carolina Department of Environment and Natural Resources, Division of Land Resources Dam Safety Program Administrative Rules for more information.

If the dam is over 10 feet tall the top width shall be 8 feet minimum. If the dam is less than 10 feet tall the top width can be less than 8 feet with City approval but in no case shall it be less than 5 feet.

Embankment design should incorporate the following considerations:

- Foundation preparation and treatment
- Control of seepage
- Embankment stability
- Construction considerations
- Subsidence
- Maintenance
- Access
- Vegetation

Low growing turf grasses which are periodically mowed are recommended for the dam and the emergency spillway to prevent erosion, control woody growth and inhibit burrowing.

If the detention facility is not a subject to the Dam Safety, the City may require the design professional to evaluate the proposed design using more stringent design requirements/criteria assigned by the City, including a dam breach analysis, if failure could potentially cause loss of life or substantial damage to property.

Freeboard

A minimum of 1-foot of freeboard shall be added to the design water surface elevation. It is the responsibility of the design professional to determine if additional freeboard is necessary. The City Engineer reserves the right to require additional freeboard if deemed necessary for safety or other considerations.

8.2.1 Design Storm and Outlet Flow Limitations

Stormwater detention is required to attenuate flow peaks such that the post-development peak discharge rate does not exceed the pre-development peak discharge rate for the 1- and 10-year 24-hour storm events. Runoff volume drawdown time for the 1-year 24-hour storm must be a minimum of 24 hours, but not more than 120 hours. Design storms and other design requirements are provided in Sections 1.3 Design Policy of this Article.

8.2.2 Storage Volume Required

The volume resulting from the difference in pre- and post-development peaks or hydrographs must be determined. The Rational Formula may only be used for sizing detention basin for small areas, as described in Section 2.3 Hydrologic Methods. Methods which include a runoff hydrograph shall be used for watersheds larger than 20 acres. Runoff hydrographs must be developed as part of the evaluation of drainage system performance during the design storm and major storm events. Computations of runoff hydrographs which do not rely on a continuous accounting of antecedent moisture conditions shall assume antecedent moisture condition II. The permanent pool should not be included in the stage-storage relationship.

8.2.3 Principal Outlet Works

Where the discharge structure consists of a single pipe outlet, the pipe shall have a minimum inside diameter of 18 inches, since maintenance of outlets smaller than 18 inches requires much more effort. If design release rates call for outlets smaller than this, release structures, such as perforated risers or flow control orifices are recommended.

Depending on the geometry of the outlet structure, discharge for various headwater depths can be controlled by the inlet crest (weir control), the riser or barrel opening (orifice control), or the riser or barrel pipe (pipe control). The hydraulic performance of these flow controls shall be evaluated when determining the rating curve of the principal outlet. Weir, orifice, and pipe flow equations shall be used to evaluate a single-opening outlet structure.

Weir Flow

Weir flow may be computed for a standard, non-contracted, horizontal weir by the following equation:

$$Q = CLH_w^{3/2} \tag{8-1}$$

where:

Q	=	discharge, in cubic feet per second
C	=	weir coefficient, use 3.08 for broad crested weir with a rounded leading edge
L	=	length of the weir, in feet; for circular riser pipes, L is the pipe circumference
H_w	=	the depth of flow over the weir crest, in feet

Another common weir is the V-notch, whose equation is as follows:

$$Q = C\tan\left(\frac{\theta}{2}\right)H^{2.5} \tag{8-2}$$

where:

Q	=	discharge, in cubic feet per second
C	=	weir coefficient, use 2.5 v-notch veir
θ	=	angle of the notch at the apex, in degrees
H	=	total energy head, in feet

The weir coefficient is a function of various hydraulic properties and dimensional characteristics of a weir. Experiments have been conducted on various types of weir configurations and formulas have been developed to determine the "C" value. Available empirical formulas are numerous. The design professional is urged to solicit hydraulic textbooks such as Handbook of Hydraulics by Brater and King and use engineering judgment for adjustments in aforementioned weir coefficients. The effects of submergence must be considered when designing or evaluating weir flow. A simple check on submergence can be made by comparing the tailwater to the weir crest elevation.

Orifice Flow

Orifice flow may be computed by the following equation:

$$Q = CA\sqrt{2gH_o} \tag{8-3}$$

where

Q	=	discharge, in cubic feet per second
C	=	orifice coefficient, use 0.61 for small submerged orifices
A	=	cross-sectional area of the orifice, in square feet
g	=	acceleration of gravity, 32.2 feet per second squared

H_o = effective head on the orifice, feet, see Figure 8-2.

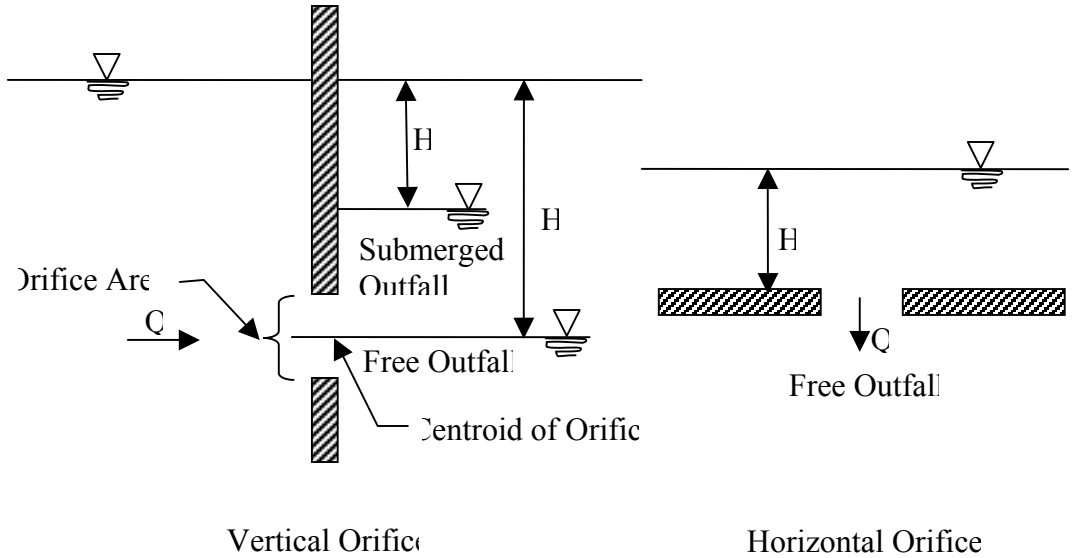

Figure 8-2 Effective Head on Orifice

The orifice coefficient is a function of various hydraulic properties and dimensional characteristics of an orifice. The design professional is urged to solicit hydraulic textbooks such as Handbook of Hydraulics by Brater and King and use engineering judgment for adjustment in aforementioned orifice coefficient.

Pipe Flow

Pipe flow may be computed by the following equation:

$$Q = A\left[\frac{2gH}{1+k_b+k_e+k_f L}\right]^{0.5} \tag{8-4}$$

where:

Q	=	discharge, in cubic feet per second
A	=	cross-sectional area of the pipe, in square feet
g	=	acceleration of gravity, 32.2 feet per second squared
H	=	the difference between headwater and tailwater elevations, in feet
k_b	=	bend loss coefficient, use 0.6 for a long radius 90 degree bend
k_e	=	entrance loss coefficient, use 0.5 for sharp edged perpendicular entrance

k_f	=	friction loss coefficient, see paragraph below
L	=	length of pipe, in feet

The friction loss coefficient, k_f, is function of various hydraulic properties and dimensional characteristics of the pipe. The design professional is urged to solicit Natural Resources Conservation Service's Engineering Handbook, Section 5 Hydraulics for friction loss coefficient values and use engineering judgment for adjustment in other aforementioned loss coefficients.

8.2.4 Emergency Spillways

The emergency spillway control structure is independent of the principal outlet works, and is usually designed as a weir. The weir capacity of the emergency spillway should be designed to discharge the water above the design water surface elevation accumulated from the design storm in a manner that satisfies the required minimum freeboard. The spillway control structure and the spillway channel entrance shall be configured to provide for a smooth transition to avoid turbulent flow over the spillway crest. The emergency spillway, along with the capacities of the other outlets, must be able to pass the runoff from the 50-year storm and other design storms such as the 100-year storm and the Probable Maximum Precipitation event, if required.

Discharge from the emergency spillway shall be directed to the receiving channel without causing erosion along the downstream toe of the dam. The emergency spillway shall be constructed in full cut undisturbed soil, if possible, to avoid flows against constructed fill.

The position, profile, and length of the spillway channel are influenced by geologic and topographic features of a site. The cross section dimensions are governed by site conditions and required hydraulic capacity of the channel. Detention pond emergency spillways are designed as stabilized open channels, following principles in Section 6 Open Channels. The spillway should be stabilized with turf grasses and periodically mowed to prevent woody growth from becoming established. The side slopes of the excavated spillway channel shall be no steeper than 4H:1V for ease of maintenance. Where site limitations prevent a full channel cut, a wing dike shall be designed to direct spillway flows away from the downstream toe of the dam. Ready access to the emergency spillway system shall be provided.

The slope of the spillway channel usually follows the configuration of the abutment. However, slopes should not exceed 10 percent. In cases of highly erodible soils, it may be necessary to use other means of protection such as riprap, or concrete channel lining. As an alternative, detention storage can be increased to reduce the frequency or duration of use of the emergency spillway and thereby reduce potential erosion problems.

The emergency spillway channel shall convey flow to the receiving channel with a minimum negative impact on the receiving channel. If necessary to prevent erosion, the receiving channel must be protected by an energy dissipating feature, as described in Section 6.9 Energy Dissipators.

8.3 ON-SITE DETENTION

Potential advantages and disadvantages of on-site detention structures should be considered by the design professional in the early stages of development. Discharge rates and outflow velocities are regulated to conform to the capacities and physical characteristics of downstream drainage systems and the criteria outlined in Section 1.3 Design Policy of this Article. Energy dissipation and flow attenuation resulting from on-site storage can reduce soil erosion and pollutant loading. On-site detention may not necessarily assist in pollutant removal; however, by controlling release flow rates, the required volume of downstream water quality controls may be minimized.

8.3.1 Parking Lots

Two general types of stormwater detention are applicable to parking lot surfaces. One type involves the runoff storage in depressions constructed at drain locations. The stored water is drained into the storm sewer system slowly, using restriction devices such as orifice plates in the drain. Proper design of such paved areas will restrict the ponding to the limited areas. This "planned ponding" will cause the least amount of inconvenience to the users of the parking areas. For example, the parking lot of a shopping center will have the ponding areas located in the least-used portions of the lot, allowing customers to walk to their vehicles in areas of no ponding, except when the entire lot is filled with vehicles. Drainage of ponded water would be fairly rapid to prevent customer inconvenience. In most cases, the water ponding depth should not exceed 6 inches for automobile parking lots, 10 inches for additional parking areas, and 15 inches in truck storage or loading areas. The ponding area should be drained within 1 hour or less after the design rainfall. Computation of the storage volume needed would be similar to the analysis used in designing standard detention facilities.

Another type of stormwater detention on parking lots consists of using the paved areas of the lot to channel the runoff to grassed areas or gravel-filled seepage pits (see Figure 8-3). Water from pavement should run through at least 30 feet of grass before entering an infiltration swale, trench or basin. Soil conditions and infiltration rate reduction due to siltation must be considered. Minimum slopes of one-half (0.5) percent are recommended in parking lot detention areas.

8.3.2 Recreational Areas

Generally, recreational areas such as outdoor athletic fields have a substantial area of grass cover, which often has a relatively high infiltration rate. Generally, stormwater runoff from such fields is minimal. Grassed recreational fields can be utilized for the temporary detention of stormwater peak runoff without adversely affecting their primary function.

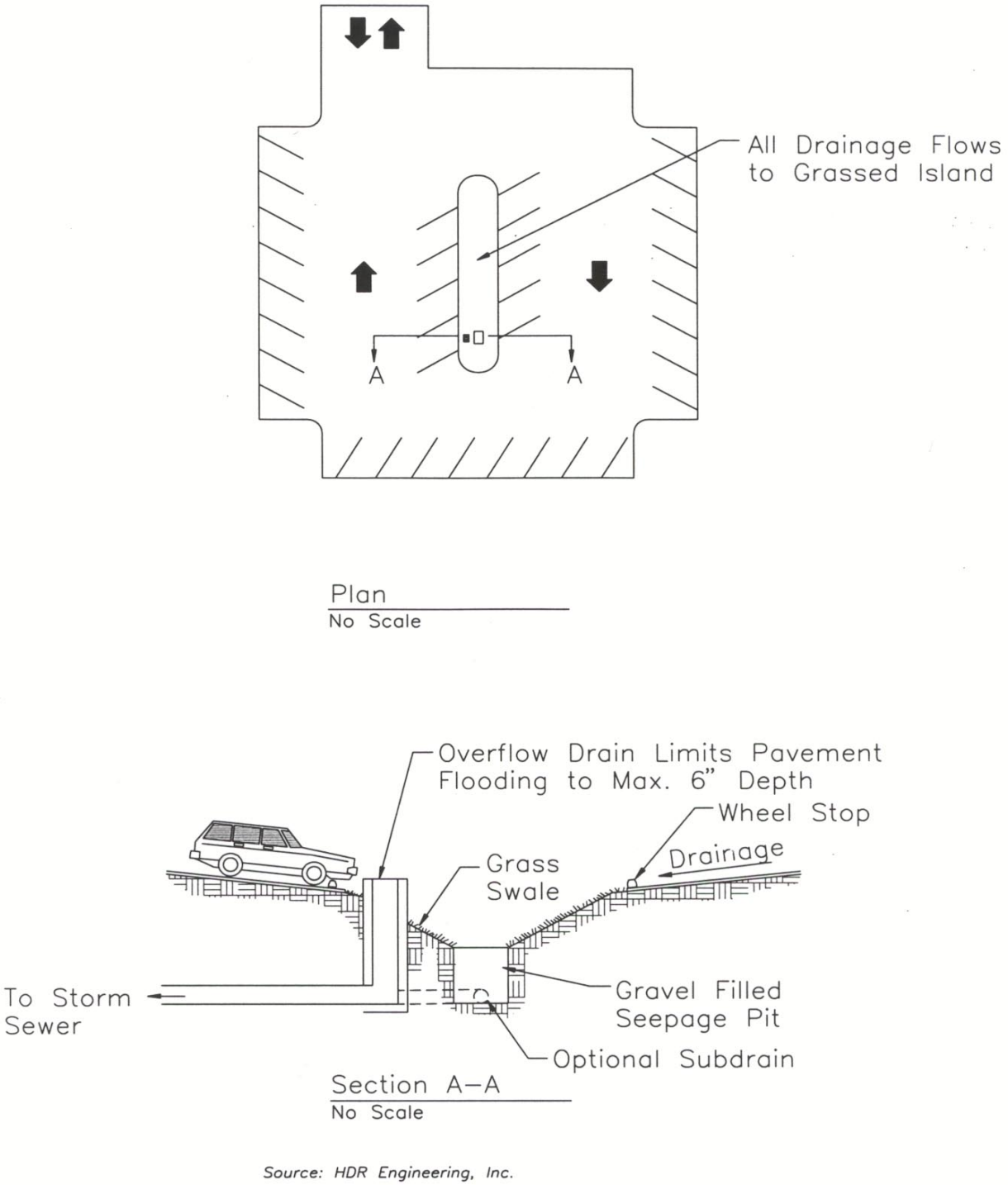

Source: HDR Engineering, Inc.

Figure 8-3 Parking Lot Detention

Parks, like recreational areas, generate little runoff of their own; however, parks provide excellent detention storage potential for runoff from adjacent areas.

Refer to the Open Space Regulations in the Unified Development Ordinance for limitations on the use of open space for stormwater detention.

8.3.3 Property Line Swales

Planning and grading new development requires adequate surface drainage away from buildings. When possible, the layout should call for a grassed swale to be located along the back and/or side property line which then drains through the block of properties (see Figure 8-4). Such drainage should be guided away from storm sewers and towards natural channels. If storm sewers are the only point of discharge, the route should be as long as possible to allow infiltration. The final grading plan for the lot layout may allow up to 6 inches of temporary ponding along the property lines. Easements shall be provided along property lines to allow maintenance access. Maintenance of the swales is responsibility of the developer and may be passed to the owner.

8.3.4 Road Embankments

The use of road embankments for temporary storage is an efficient method of attenuating the peak flows from a drainage basin. The design criteria to be used for the temporary detention of water behind road embankments shall include consideration of the major storm runoff. Planning for the usage of embankments must be done with thorough consideration to avoid damage to the embankment, the road structure, and adjacent property. Designs utilizing road embankments shall conform to North Carolina Department of Transportation design criteria, including the slope protection measures.

8.3.5 Pipes, Tanks, and Vaults

Underground facilities such as pipes, tanks, and vaults equipped with hydraulic control structures may be utilized for quantitative stormwater runoff control. Control structures may include orifices and weirs. Facility design shall provide for the storage of the required volume generated by design storm event. Overflow weirs within the facility shall bypass the fully developed design storm. Site grading design shall include overflow provisions for major storm runoff.

8.3.6 Combinations

In many instances, one on-site detention method cannot conveniently or economically satisfy the required amount of stormwater storage. Limitations in storage capacity, site development conditions, soils limitations, and other related constraints may require that more than one method be implemented. For example, parking lot and surface pond storage might both be required to compensate for increases in runoff due to development of a particular site. Whatever storage combinations are suitable for the particular site should be incorporated into the site development plan.

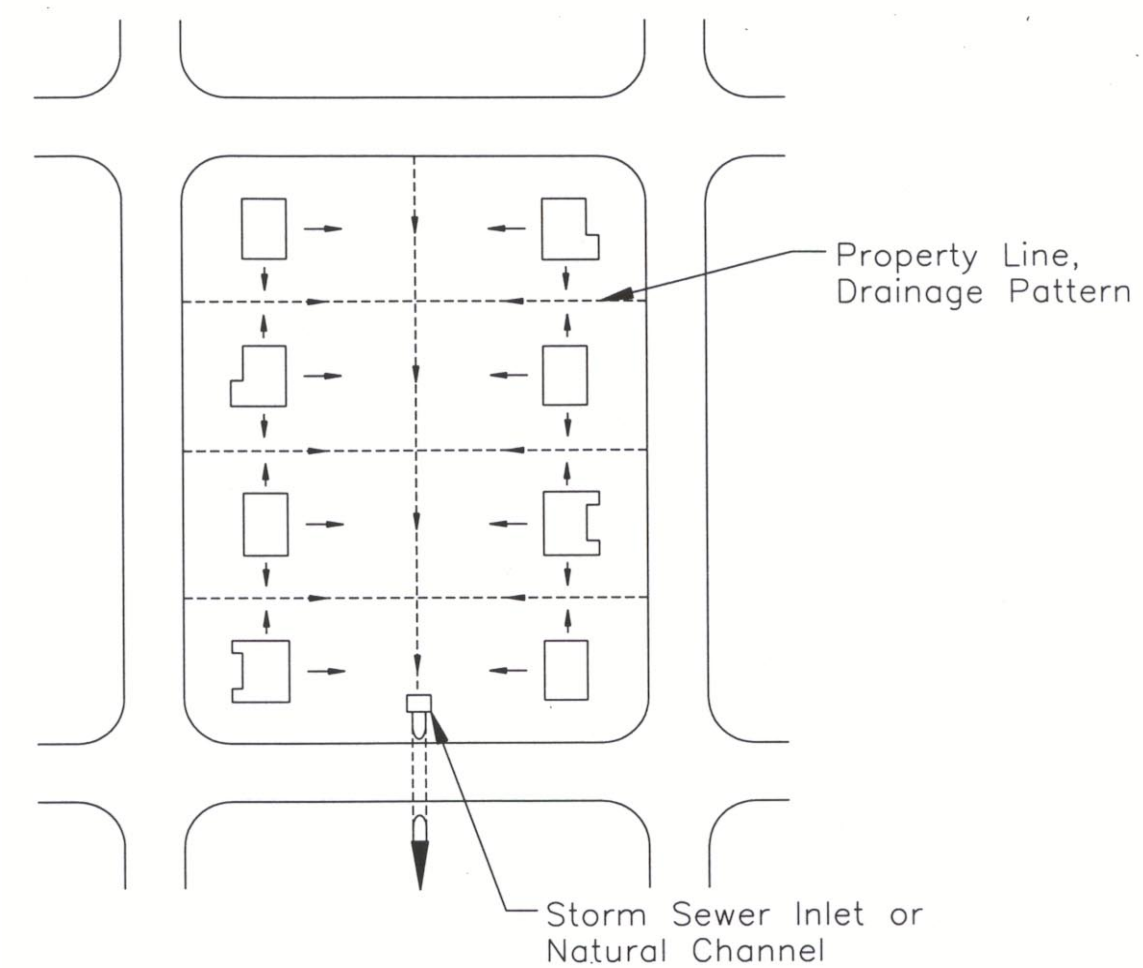

Source: HDR Engineering, Inc.

Figure 8-4 Property Line Swales

8.4 HYDRAULIC DESIGN METHODS

8.4.1 Modified Rational Method Analysis

The Modified Rational Method Analysis is a procedure for manipulating the basic Rational Method to reflect the fact that storms with durations greater than the time of concentration for a basin will result in a larger runoff volume even though the peak discharge is reduced. This larger runoff volume must be determined to size detention facilities properly.

The method becomes more valid for progressively smaller basins, eventually reaching a size for which this numerical method closely approximates the natural conditions. The method should, therefore, be limited to relatively small areas such as rooftops, parking lots, or other upstream areas with contributing basins less than 5 acres, or when runoff from this basin is less than one percent of the total flow from the watershed. The consideration of this method minimizes potential major damage which could result from overtopping or failure of the proposed detention facility.

Figure 8-5 presents a series of curves for a theoretical basin described in the following example. These hydrographs are developed by using the basic Rational Method assumptions of constant rainfall intensity, time of concentration (t_c) for the longest flow path, and runoff coefficient. The typical Rational Method hydrograph with the peak discharge coinciding with the time of concentration for the basin is first calculated using the formula, $Q_p = C_f CiA$. Following this, a series of hydrographs representing storms of greater duration than t_c are developed. The rising and falling limb of the hydrograph are, in each case, equal to t_c for the basin. The area under the hydrograph is also equal to the peak discharge rate for that particular rainfall multiplied by the duration of the rainfall.

Example 1: Modified Rational Method

Given: Area: A = 2.0 acres
Type of development: commercial parking lot, fully paved, C = 0.95 (Table 2-5)
Time of concentration: t_c = 8 minutes
Design Frequency = 10 years
Use Intensity-Duration-Frequency Curves, Figure 2-2.

Find: Develop family of curves representing Modified Rational Method hydrographs for the 8-, 10-, 15-, 20-, 30-, and 40-minute storm durations.

Solution:

$$Q_p = C_f CiA$$

The table below summarizes the calculations for this example.

Table of Calculations for Example #1		
Storm Duration (minutes)	**Rainfall Intensity (inches/hour)**	**Peak Runoff Rate (cfs)**
8	6.20	10.9
10	5.74	10.1
15	4.85	8.5
20	4.40	7.7
30	3.50	6.2
40	3.09	5.4

The resulting storm hydrographs are depicted in Figure 8-5, on page 8-15.

The next step in determining the necessary storage volume for the detention facility is to set a release rate and determine the volume of storage necessary to accomplish this release rate.

To determine the storage volume required, a reservoir routing procedure should be accomplished for each of the hydrographs, with the critical storm duration and required volume being determined. The importance of the particular project should govern the type of routing utilized. For small areas requiring repetitive calculations, such as parking lot bays, an assumed release curve is normally satisfactory. For larger areas, such as a pond in a small open area, a hydrograph procedure is more appropriate.

In normal flood routing, the maximum release rate will always occur at the point where the outflow hydrograph crosses the receding limb of the inflow hydrograph. For this reason, the design release rate is forced to coincide with that point on the falling limb of the hydrograph resulting from the storm duration equal to the time of concentration for the basin. The release rate is held constant past this point. The storage volume is then found by determining the area between the inflow and outflow hydrographs. Example 2 continues the calculations performed in Example 1 to determine the required storage volume.

The equation for the storm runoff volume, V_r, can be simplified as:

$$V_r = 60DQ_p \tag{8-6}$$

where:

V_r = storm runoff volume, in cubic feet
D = storm duration, in minutes
Q_p = peak runoff rate of the inflow hydrograph, in cubic feet per second

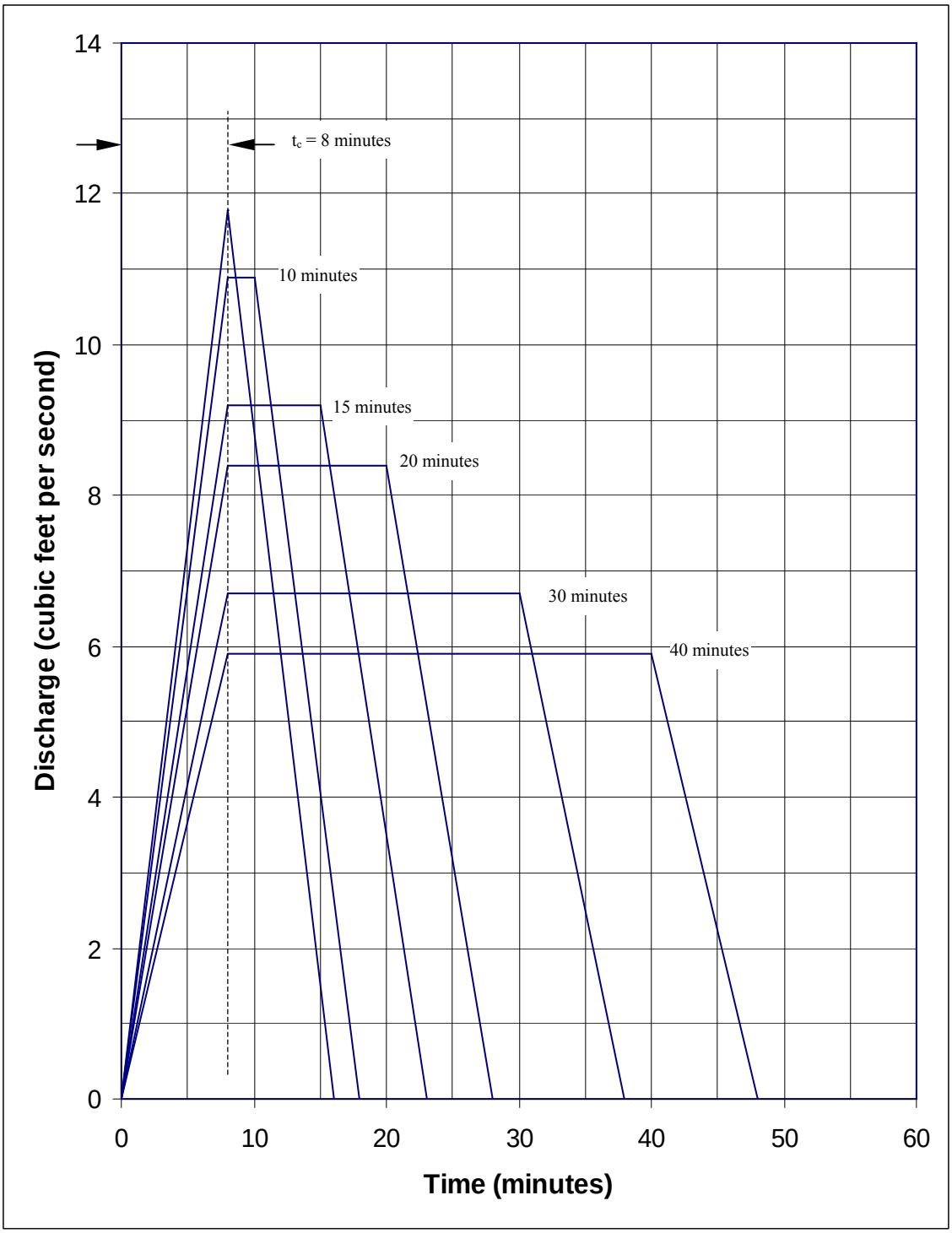

Figure 8-5 Modified Rational Method Analysis - Example 1

The equation for the storm runoff volume, V_r, can be simplified as:

$$V_r = 60DQ_p \tag{8-6}$$

where:

V_r	=	storm runoff volume, in cubic feet
D	=	storm duration, in minutes
Q_p	=	peak runoff rate of the inflow hydrograph, in cubic feet per second

The equation for the required storage volume, V_s, can also be simplified as:

$$V_s = 60D(Q_p - Q_o) \tag{8-7}$$

where:

V_s	=	required storage volume, in cubic feet
D	=	storm duration, in minutes
Q_p	=	peak runoff rate of the inflow hydrograph, in cubic feet per second
Q_o	=	maximum release rate, in cubic feet per second

Example 2: Critical Storage Volume

Given: Drainage basin and other hydrologic information presented in Example 1.

Allowable release rate: $Q_o = 4.0$ cubic feet per second

Find: Determine the critical storage volume

Solution:

$V_r = 60DQ_p$

$V_s = 60D(Q_p - Q_o)$

The table below summarizes the calculations for this example.

Table of Calculations for Example #2		
Storm Duration (minutes)	**Runoff Volume (cubic feet)**	**Required Storage Volume (cubic feet)**
8	5,232	3,312
10	6,060	3,660
15	7,650	4,050
20	9,240	4,440
30	11,160	3,960
40	12,960	3,360

The shaded area in Figure 8-6, on the next page, shows the storage required for this example. The critical storage volume is 4,440 cubic feet for a 20-minute rainfall duration.

These examples describe a method for small area detention analyses. The assumed release curve approximates a formal reservoir routing in much the same way the Rational Method Hydrograph approximates a true storm hydrograph. The curve allows for the low release rate at the beginning of a storm and an increasing release rate as the storage volume fills up.

8.4.2 Hydrograph Procedure for Storage Analysis

The unit hydrograph procedure develops a hydrograph that provides a more reliable solution for detention storage effects. The procedure provides the design professional with greater flexibility to represent the actual modeled conditions. This procedure can be used for any size drainage area. For detention basin design, minimum design storm duration of 24 hours should be used.

The development of the stormwater runoff hydrograph is presented in Section 2.3 Hydrologic Methods of this Article. The hydrograph presented by dashed line in Figure 8-7, on page 8-19 represents inflow to a reservoir by routing the peak over a side channel spillway from the channel into an adjacent ponding area. The analysis for the reservoir storage must take into consideration the characteristics of the outlet structure. The discharge curve for the outlet structure is shown in Figure 8-7 as a solid line. The shape of the solid line reflects the carrying capacity of the outlet with various headwater elevations. The higher the elevation of the water surface in the reservoir, the greater is the discharge through the outlet. The area between the dashed line of inflow hydrograph and the solid line of outflow hydrograph represents the volume of storage required to reduce channel flow from 200 to 100 cubic feet per second.

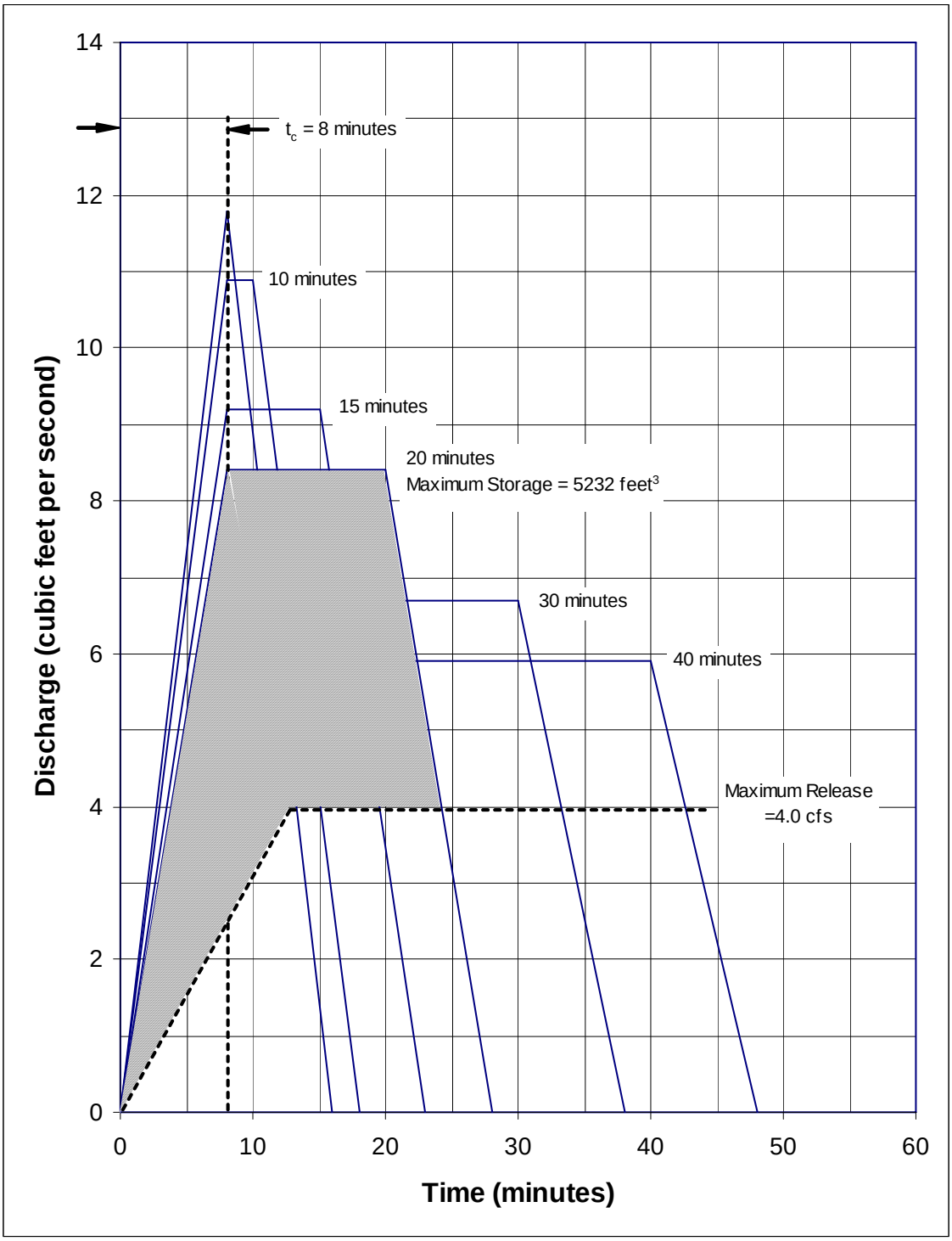

Figure 8-6 Modified Rational Method Analysis - Example 2

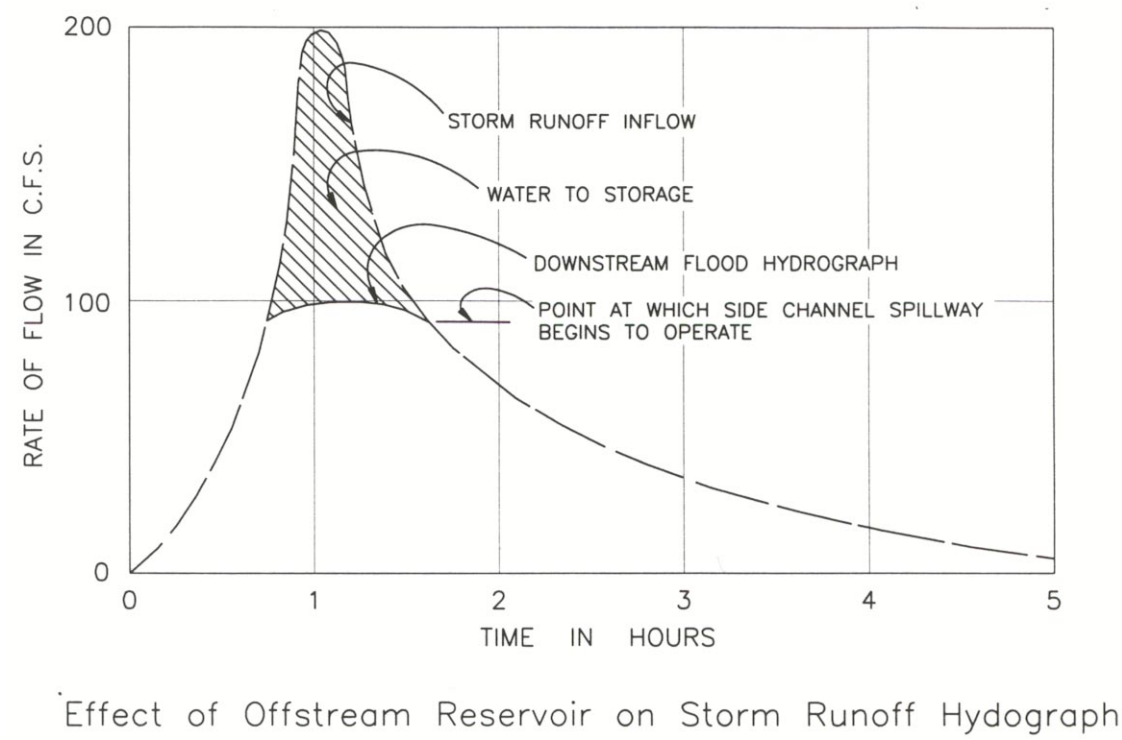

Figure 8-7 Effect of Offstream Reservoir on Storm Runoff Hydrograph

8.4.3 Modified Puls Routing Procedure

Modified Puls Routing Procedure may be used to determine the required volume of the detention basin. Other procedures available in published texts may be used as well. The data needed for this routing procedure include the inflow hydrograph, the physical dimensions of the storage basin, the maximum outflow allowed, and the hydraulic characteristics of the outlet structure and/or spillway.

This procedure involves the creation of the inflow hydrograph, depth-storage relationship, and depth-outflow relationship, which are combined in a routing routine. The results of the routing are the ordinate of the outflow hydrograph, the depth of storage, and the volume of storage at each point in time of the flood duration.

The time interval, Δt, is selected small enough so that there is a good definition of the hydrograph and the change in the hydrograph during the period Δt is approximately linear. This can be accomplished by setting $\Delta t = 5$ or 10 minutes, depending on size of watershed and hydrograph time to peak.

Several assumptions are made in this procedure and include the following.

A. The entire inflow hydrograph is known.

B. The storage volume is known at the beginning of the routing.

C. The outflow rate is known at the beginning of the routing.

D. The outlet structures are such that the outflow is uncontrolled and the outflow rate is dependent only on the structure's hydraulic characteristics.

The derivation of the routing equation begins with the conservation of mass, which states that the difference between the average inflow and average outflow during some time period Δt is equal to the change in storage during that time period. This can be written in equation form as:

$$\bar{I} - \bar{O} = \Delta S/\Delta t \qquad (8\text{-}8)$$

where:

$\bar{I}$	=	average inflow rate, in cubic feet per second
$\bar{O}$	=	average outflow rate, in cubic feet per second
ΔS	=	change in storage volume, in cubic feet
Δt	=	routing period, in seconds

If inflow during the time period is greater than outflow, then ΔS is positive and the pond becomes deeper. If inflow is less than outflow during the time period, then ΔS is negative and the pond becomes shallower. Using the assumptions made previously, this equation can be rewritten as:

$$\left[\frac{I_1 + I_2}{2}\right] - \left[\frac{O_1 + O_2}{2}\right] = \left[\frac{S_2 - S_1}{\Delta t}\right] \tag{8-9}$$

where:

I_1	=	inflow rate at time interval 1, in cubic feet per second
I_2	=	inflow rate at time interval 2, in cubic feet per second
O_1	=	outflow rate at time interval 1, in cubic feet per second
O_2	=	outflow rate at time interval 2, in cubic feet per second
S_1	=	storage volume at time interval 1, in cubic feet
S_2	=	storage volume at time interval 2, in cubic feet
Δt	=	routing period, in seconds

Multiplying both sides by two and separating the right-hand side yields:

$$(I_1+I_1) - (O_1+O_2) = \left[2\frac{S_w}{\Delta t} - 2\frac{S_1}{\Delta t} \right] \tag{8-10}$$

Rearranging so that all the known terms are on the left-hand side and all the unknown terms are on the right-hand side yields the final routing equation:

$$(I_1 + I_2) + \left[2\frac{S_1}{\Delta t} - O_1 \right] = \left[2\frac{S_2}{\Delta t} + O_2 \right] \tag{8-11}$$

However, Equation 8-9 has two unknowns, S_2 and O_2. To obtain a solution for S_2 and O_2, a second equation relating storage and outflow is needed. If outflow is a direct function of reservoir depth (as it is with uncontrolled outflow), there is a direct relationship that exists between reservoir elevation, reservoir storage, and outflow. Therefore, for a particular elevation, there is an answer for storage and outflow (S and O). A relationship between O and $(2S/\Delta t) + O$ must be determined for several elevations and plotted on logarithmic graph paper. The routing equation is solved by adding all the known terms on the left-hand side. This yields a value for $(2S_2/\Delta t) + O_2$. This value is found on the log-log plot of $(2S/\Delta t) + O$ versus O and a value for O_2 can be determined.

Example 3: Depth-Storage/Depth-Outflow

The $(2S/\Delta t) + O$ versus O relationship is derived by combining the depth-storage relationship and the depth-outflow relationship, as previously discussed. This information is shown in Table 8-2. Columns 1, 2, and 3 are given tabulations of the depth-storage and depth-outflow relationships for a specific detention facility.

In column 4, the units of $2S/\Delta t$ and O must be the same. If O is in cubic feet per second, then $2S/\Delta t$ must be changed to cubic feet per second. For a routing time interval of 5 minutes:

$$\frac{2\,S_{\,cubic\ feet}}{5_{\,minutes}} \times \frac{1_{\,minutes}}{60_{\,seconds}} = 0.00667\ S$$

Thus,

$$\frac{2S}{\Delta t} + O = 0.00667S + O \text{ for } \Delta t = 5_{\,minutes}$$

where:

S has units of cubic feet
O has units of cubic feet per second, and
$2S/\Delta t$ has units of cubic feet per second

Table of Calculations for Example #3			
Depth (feet)	**Storage, S (cubic feet)**	**Outflow, O (cubic feet per second)**	**$(2S/\Delta t) + O$ (cubic feet per second)**
0	0	0.00	0.0
1	438	0.43	3.4
2	1224	0.61	8.8
3	2466	0.75	17.2
4	4272	0.87	29.4
5	6750	0.97	46.0

Plotting O on the Y-axis and $(2S/\Delta T) + O$ on the X-axis on a log-log graph can result in any type of curve.

8.5 DEBRIS AND SEDIMENTATION

The performance and reliability of detention facilities can be reduced by natural and man-made debris. Naturally occurring sedimentation can, over a period of time, reduce the storage capacity of a detention basin and thereby reduce the degree of flood protection provided. The obstruction of low flow conduits by debris can reduce outlet capacity and cause the premature filling of the detention basin with stormwater, again reducing the designed level of flood protection provided by the structure. Consequently, design must provide for adequate protection of the outlet from debris and for the control and removal of sediment collected in the basin.

8.5.1 Trash Racks

All outlet works and low flow conduits shall be equipped with a trash rack for debris control. The maximum spacing of trash rack bars shall not exceed two-thirds of the outlet opening size or diameter. The trash rack shall allow for passage of the design flow with 50 percent of the trash rack area blocked. Calculations for head losses through a trash rack shall be included in the hydraulic evaluation of the outlet. The trash rack should have an area equal to 10 times the area of the outlet to maintain low velocities through the trash rack.

8.5.2 Sedimentation

Sediment removal within a detention facility may be facilitated by the use of a "sediment trap" or forebay at the inlet, which will concentrate the majority of the incoming sediment bed load to a small portion of the facility. Sediment traps should be provided in conjunction with all detention facilities.

To create the forebay, a baffle or berm can be introduced to restrict the hydraulic connection between the inlet and the main body of the wet detention basin. Baffles and berms can be constructed from stone, gabions, or compacted earth. Depth is a very important design criterion if the basin is also used for water quality improvement. The average depth of 3 to 6 feet for the permanent pool is recommended for most wet detention basins.

The following list provides guidelines for the design of efficient forebays:

1. Sedimentation volume should not rise higher than the invert elevation below of the inflow channel in order to facilitate conveyance into the forebay.

2. The length/width ratio of the forebay should be a minimum of 2:1, with the length measured along a line between the inlet and outlet.

3. The basin shape should be configured to prevent flow short-circuiting from the inlet to the outlet. Short-circuiting can be minimized by placing the inlet at the opposite end or installing flow baffles or berms. Longer residence times allow the finer sediments to settle out.

4. Provisions for accumulated sediment removal from the forebay shall be provided. Maintenance access should be designed to accommodate dump trucks and other equipment necessary for removal of accumulated sediment.

SECTION 9
SEDIMENT AND EROSION CONTROL

Page

9.1 STANDARDS FOR EROSION AND SEDIMENT CONTROL

Any land disturbing activity within the City of Concord (City) must comply with the Cabarrus County Sediment and Erosion Control Ordinance and the North Carolina Erosion and Sedimentation Control Act of 1973. If the activity is one acre or greater, it must also comply with the National Pollution Discharge Elimination System (NPDES) General Permit for stormwater discharge from construction sites issued for the activity. Appropriate monitoring of the site's sediment control measures and record keeping of inspections are required as part of the NPDES permit in order to comply with North Carolina Department of Environment and Natural Resources (NCDENR) Water Quality rules. Periodic inspection of the sites by City personnel may also occur to ensure compliance with the conditions of the Phase II stormwater permit issued to the City by the NCDENR.

SECTION 10
WATER QUALITY

Page

TABLE

LIST OF FIGURES

10.1 INTRODUCTION

In general, stormwater runoff and nonpoint source pollution has the potential to significantly impact surface water quality. Because the quality of stormwater runoff is closely tied to proper management of stormwater quantity, it is important to address stormwater quality during conceptual project development. This section discusses stormwater management principles and specific strategies, called Best Management Practices (BMPs), for controlling stormwater.

From a stormwater runoff quality perspective, it is helpful to understand the "first flush" phenomenon. Studies have shown that the portion of stormwater runoff captured during the first fifteen minutes of a storm event contains the highest concentrations of pollutants and is commonly referred to as the first flush. Thus, the pollutant accumulation in intense small runoff events can be more detrimental to water quality than larger flooding events. Because of this, upstream management practices that control small volumes of initial runoff can be very effective in enhancing nonpoint source pollutant removal. The BMPs discussed and referenced in this ection emphasize the strategy of controlling the first flush; however, the design professional should not only consider this strategy as the only goal but as an essential component of total stormwater management. This goal must be integrated with other requirements, such as detention of increased runoff volume and considerations for maintenance and operation.

10.2 DESIGN CRITERIA AND STANDARDS

It is the responsibility of each property owner to meet stormwater runoff quality standards. This may be achieved by implementation of BMPs and other measures to reduce nonpoint source pollution. North Carolina Department of Environment and Natural Resources (NCDENR), Division of Water Quality, issues individual permits to owner's of municipal separate storm sewer systems for stormwater discharges from these systems to the receiving waters of the State. All sites required for permitting by the City of Concord's (City) Stormwater Quality Management and Discharge Control Ordinance shall utilize BMPs to meet the requirements of the Ordinance, also identified in Section 1 Policies and Requirements.

The standards and criteria for construction, operation, and performance of these BMPs are provided by NCDENR's Stormwater Best Management Practices Manual. Design professionals should obtain the most current version available of this manual from NCDENR and use it as the primary guidance document for BMP design and operation. The Stormwater Best Management Practices Manual is a guidance document developed for statewide application, and therefore, may contain design guidance not entirely applicable for use in the City. The design professional should exercise good engineering judgment in the use of the manual. The City Engineer may request additional design considerations or reject some BMP design that may compromise operation and attainment of performance standards due to regional conditions.

Other regulations may require additional stormwater runoff quality standards above and beyond those required for National Pollution Discharge Elimination System (NPDES) Phase II and outlined

in the Ordinance. Therefore, it is essential that the design professional consider the future use of a site and account for any predictable water quality problems and standards of performance.

10.3 BEST MANAGEMENT PRACTICES - SOURCE CONTROL

The goal of source control BMPs is to keep pollutants from coming in contact with stormwater. Source control consists of good management and housekeeping practices intended to reduce contact between stormwater and pollutants. The source control strategies should always be considered before structural BMPs.

10.3.1 Source Control Strategies

Specific activities that are considered source control BMPs in order of preference are:

- Alter the activity
- Enclose the activity
- Cover the activity
- Segregate the activity

Alter the Activity

The preferred option of source control is altering the activity to eliminate contact between runoff and the potential pollutant source. This alteration can be accomplished by either eliminating pollutant production or by keeping it from coming into contact with the environment. The recycling of used oil rather than dumping it down a storm drain inlet is an example of altering the activity.

Enclose the Activity

If the activity cannot be altered, the next recommended approach is to enclose the activity in some structure. Enclosure accomplishes two things: first, it keeps rainfall from coming into contact with the activity and second, building drains convey non-stormwater discharges into sanitary or process wastewater sewers, or dead-end sumps, and therefore, contamination of runoff is prevented.

Cover the Activity

Placing activity inside a building may not be feasible or may be extremely expensive. A less expensive approach is placing a roof over the activity. This may be affective for certain activities, although it is unlikely to completely keep all precipitation out of contact with pollutants. Internal drains must be connected to the sanitary sewer to collect water used to wash down the area as well as any rainfall that may enter along its perimeter.

Segregation of Activity

The segregation of an activity that is a source of pollutants from other activities of little or no pollution potential may lower the cost of enclosure or covering and make this approach more effective.

Another method segregates the runoff from small, frequent storm events contributing the majority of the high concentration pollutants and/or targeted pollutants from the runoff from higher magnitude storms with low pollutant concentration. The runoff from the small storm events is collected in dead-end sumps, which must be periodically cleaned-out and pollutants properly discarded.

10.3.2 Typical Source Controls

The following is a list of the various types of Source Control BMPs that can be considered for new development:

- Land use controls:
  - Buffers around water bodies
  - Riparian zones along streams
  - Open spaces
  - Mixed and/or controlled zoning
  - Interrupted impervious area criteria

- Floodplain management practices
  - Preservation of floodplain storage
  - Use of natural, vegetated waterways

- Elimination of illicit connections

- Maintenance of drainage facilities

- Housekeeping practices
  - Street sweeping
  - Household hazardous waste collection
  - Fertilizer/herbicide/pesticide control

- Public education

10.4 BEST MANAGEMENT PRACTICES - STRUCTURAL CONTROL

One of the goals of implementing BMPs is to control nonpoint pollution by directing attention to potential contributing sources. Structural BMPs accomplish this by collecting, concentrating, and/or treating the runoff that is one of the largest pollution nonpoint sources. The techniques are designed to reduce soil loss and prevent surface runoff from carrying heavy sediment and nutrient loads into waterbodies.

Structural BMPs may generally be categorized as:

1. Detention
2. Filtration
3. Infiltration

Detention controls retain stormwater onsite either in a permanent or temporary pool with an outlet structure designed to later release the volume at a predetermined rate. The period of detention allows for a dissipation of velocity and the settlement of solids from the discharge. Filtration type BMPs use biological, physical, and chemical processes that provide a reduction in the concentration of contaminants in stormwater. Vegetative uptake, chemical fixation, and physical impedance are processes that assist in filtration. Infiltration controls provide for a reduction in the quantity of stormwater generated by enhancing the rate of infiltration of stormwater into the soil surface. Some methods for controlling stormwater quantity may have the secondary benefit of improving water quality. Natural processes work to treat stormwater for quality control once stormwater enters the vegetation and soil matrix. Selected BMPs can incorporate several of the aforementioned techniques. These BMPs are highly effective in treating a range of pollutants for a range of efficiencies.

Soils typically found in the City are dominated by clay compositions, and therefore, are not highly infiltrative. BMPs that use infiltration as the primary means for treating stormwater should not be regarded as effective options for stormwater quality control. These BMPs will tend to retain volumes of stormwater longer than expected; therefore, causing localized flooding around the BMP facility. If a design professional considers an infiltrative BMP for construction and operation, additional assurance for effective performance must be demonstrated and performed. This shall include and may not be limited to the following assurances: geotechnical testing for infiltration rates, increase in water quality storage volume, incorporation of pretreatment devices and an under drain system and quality control of construction practices to prevent damage prior to initial operation.

10.4.1 <u>Choosing a Structural BMP</u>

There are four screening criteria that can be used to identify the suitable structural BMP for a given situation. The first category is the physical suitability of a site for constructing and maintaining the BMP. Physical suitability includes the technical feasibility criteria related to physical conditions such as slope, soils, geology, groundwater, and area requirements. The second category is related to mitigation of adverse changes in hydrologic conditions such as increases in peak flow and volume of

runoff caused by development. The third category is the pollutant removal capability of the structural BMPs; and the final category deals with the environmental and aesthetic amenities provided by the structural BMPs. Table 10-1 lists the criteria for each of the four screening categories.

TABLE 10-1
SCREENING CRITERIA FOR SELECTING STRUCTURAL BMPs

Screening Category	Criteria
Physical suitability	Drainage area Soil types Slope Distance to water table Depth to bedrock Proximity to foundations and wells Land-area requirement Maximum depth Suitability with other land uses Ability to handle high sediment inputs Thermal impacts on receiving waters
Hydrologic conditions	Peak-discharge control Volume control Groundwater recharge Erosion control Control of streambank erosion
Pollutant removal capability	Sediment Nutrients Oxygen demand Trace Metals Pathogens Temperature
Environmental and aesthetic amenities	Maintenance of low flows for aquatic life Creation of habitat for wildlife and aquatic plants Landscape enhancement and aesthetic value Recreational benefits
Source: Effective Watershed Management for Surface Water Supplies	

Physical Suitability Criteria

The screening process of structural BMPs should begin with their physical suitability to local conditions. This screening is the first and most important step in the selection process. Two of the main physical factors to be considered are the total contributing drainage area and the infiltration rate of the soils. The suitability of BMPs with respect to drainage area and soil type is presented in Figures 10-1 and 10-2. Experience has shown that both retention (wet) and extended detention (dry) ponds require a contributing area of at least 10 acres to operate properly. Wet ponds are defined as facilities with permanent pools of water. A permanent flow through the facility during non-runoff periods is preferable to keep the permanent pool from being completely static, which requires a sufficient drainage area and suitable climatic conditions. The land requirements for dry ponds are governed by the size of the discharge structure (usually an orifice). Infiltration trenches, vegetated swales, and filter strips are generally acceptable for areas less than 10 acres due to limitations related to space requirements, economics, or their limited range of flow velocity. Hereinafter, filter strips shall refer to revegetated areas on disturbed, graded slopes and are designed to accept only overland sheet flow. This area limitation does not apply to vegetated buffers along streams and bodies of water where an area limitation would not be applicable. Infiltration BMPs are better suited for coarse-textured soils. Soil types such as sandy-gravely soils eliminate wet ponds as an option because these soils are highly permeable, making it difficult to maintain a permanent pool of water.

Other physical restrictions include the slope of the site, depth of bedrock, proximity of nearby wells and building foundations, contributing area requirements, maximum depth limits, applicability to certain land uses, ability of the structural BMPs to handle large sediment loads without clogging, and thermal impact on receiving waters. Common restrictions for various structural BMPs are presented in Figure 10-3. Examination of the data in this figure shows that steep slopes can prevent the use of infiltration and vegetation BMPs. Furthermore, high water tables and shallow bedrock that impedes downward movement of water also limits use of infiltration BMPs. Care must be taken to avoid locating infiltration BMPs close to buildings or water supplies (wells). Because detention ponds often require large areas, placement in existing developments may not be feasible. In addition, many structural BMPs (ponds, trenches, etc.) have depth limitations. When the depth of ponding exceeds 8 feet, stratification can occur during warm weather resulting in anoxic conditions along the bottom of the pond. Several structural BMPs are limited to certain type of land uses or development densities. Vegetated swales are usually limited to low-density residential development and road right-of-way.

Hydrologic Criteria

Hydrologic criteria focus on the ability of the structural BMPs to reduce the runoff from an area to pre-development levels or some other defined condition. Criteria include peak discharge control, volume control, groundwater recharge, and erosion control. Figure 10-4 compares the ability of various structural BMPs to meet these conditions. Similar to the physical suitability criteria, no single BMP can mitigate all hydrologic modifications caused by urban development.

The City requires all water quality BMPs to be designed to control peak discharges for the 1- and 10-year, 24-hour storm events (refer to Table 1-1 in Section 1.3 Design Policy). Detention BMPs accomplish this by temporarily storing the runoff up to desired volume and using outlet structures that allow only a certain flow to pass while detaining the additional flow until the peak has passed. When the pond inflow falls below the value of maximum allowable outflow, the volume stored in the structure will begin to decrease. Infiltration BMPs often have only limited capacity to reduce peak flows. Likewise, vegetative BMPs usually have almost no peak discharge control.

The volume control method decreases the total runoff volume to downstream areas. Detention ponds are ineffective, since they just provide temporary storage and then eventually release the remainder of the volume. On the other hand, infiltration BMPs are effective in reducing the total volume of runoff, because they are designed to divert water back into the soil. These structures are also an excellent means of groundwater recharge.

As a general rule, natural channels with banks flowing full can contain a 2-year storm. Therefore, BMPs that discharge a 2-year storm or greater event may cause erosion in the channel. The BMP discharge must be kept below the 2-year flow and the frequency of occurrence must be minimized. Extended detention ponds in combination with some infiltration devices provide an effective solution for proper design and maintenance.

Pollutant Removal Criteria

Pollutant removal is a function of three interrelated factors: 1) the removal mechanisms, including physical, chemical, and biological processes; 2) the fraction of runoff to be treated by the BMP; and 3) the pollutant(s) targeted for removal. Those BMPs that use settling and filtering processes are effective in removing sediment and those pollutants (both solid and soluble) that adhere to sediment particles. Case studies have shown that ponds can remove as much as 85 percent or more of sediment. However, infiltration BMPs are not recommended without pre-treatment, where high loadings of sediment are encountered, due to the high potential for clogging. Strategically placed filter strips may remove sediment prior to flow entering the infiltration BMP. The vegetated swales and filter strips often provide limited removal rates because urban stormwater frequently short-circuits through buffer areas. Shallow marshes along the perimeter of wet ponds and extended detention ponds have a moderate to high capability to remove both particulate and soluble pollutants due to settling and biological uptake. Figure 10-5 displays the relative capacity for pollutant removal for varying BMPs.

Environmental and Aesthetic Amenity Criteria

The selection of structural BMPs is often determined by the environmental benefits that can be achieved and by the community's willingness to accept the facility. Environmental and aesthetic amenities may include control of stream bank erosion, creation of aquatic habitat, creation of wildlife habitat, elimination of thermal stratification, landscape enhancement, creation of recreational facilities, and reduction of existing hazards. However, the environmental and aesthetic benefits may not be realized unless community's acceptance of the structure is obtained.

Figure 10-6 provides guidance in understanding the offerings of environmental and aesthetic elements benefits for BMPs.

	1 ACRE	5 ACRES	10 ACRES	25 ACRES	50 ACRES	>100 ACRES
WET (RETENTION) POND	○	○	◑	●	●	●
EXTENDED DETENTION POND	○	○	◑	●	●	●
WETLAND SYSTEM	○	◑	◑	●	●	●
INFILTRATION TRENCH	●	●	◑	○	○	○
BIORETENTION AREA	●	●	◑	○	○	○
FILTER STRIP	●	●	◑	○	○	○
VEGETATED SWALE	●	●	◑	○	○	○
SAND FILTER	●	●	◑	○	○	○
PERMEABLE PAVEMENTS	●	◑	○	○	○	○

○ MAY PRECLUDE THE USE OF THIS BMP
◑ CAN BE OVERCOME BY GOOD SITE DESIGN
● GENERALLY NOT A RESTRICTION

Figure 10-1 Drainage Area Restrictions of Structural BMPs

	SAND	SANDY LOAM & LOAMY SAND	LOAM	SILT LOAM	SANDY CLAY LOAM	CLAY LOAM	SILTY CLAY LOAM	SILTY CLAY & SANDY CLAY	CLAY
WET (RETENTION) POND	○	◑	●	●	●	●	●	●	●
EXTENDED DETENTION POND	●	●	●	●	●	●	●	◑	○
WETLAND SYSTEM	○	◑	●	●	●	●	●	◑	○
INFILTRATION TRENCH	●	●	●	◑	○	○	○	○	○
BIORETENTION AREA	●	●	●	◑	○	○	○	○	○
FILTER STRIP	◑	●	●	●	●	●	●	●	◑
VEGETATED SWALE	◑	●	●	●	●	●	●	●	◑
SAND FILTER	●	●	●	◑	○	○	○	○	○
PERMEABLE PAVEMENTS	●	●	●	◑	◑	◑	◑	◑	◑

○ MAY PRECLUDE THE USE OF THIS BMP
◑ CAN BE OVERCOME BY GOOD SITE DESIGN
● GENERALLY NOT A RESTRICTION

Figure 10-2 Soil Restrictions of Structural BMPs

	SLOPE	HIGH WATER TABLE	HIGH BEDROCK	PROXIMITY TO FOUNDATIONS	SPACE CONSUMPTION	MAXIMUM DEPTH	LAND USE RESTRICTIONS	HIGH SEDIMENT LOADS	THERMAL LOADING
WET (RETENTION) POND	●	●	◑	◑	○	○	●	◑	◑
EXTENDED DETENTION POND	●	●	◑	◑	○	○	●	◑	●
WETLAND SYSTEM	◑	◑	◑	◑	◑	○	◑	◑	○
INFILTRATION TRENCH	○	○	○	○	◑	○	●	○	●
BIORETENTION AREA	◑	○	○	○	●	○	◑	○	◑
FILTER STRIP	◑	◑	●	●	◑	●	●	○	○
VEGETATED SWALE	◑	◑	◑	●	●	◑	●	◑	○
SAND FILTER	○	○	○	○	◑	○	◑	○	●
PERMEABLE PAVEMENTS	○	○	◑	◑	◑	●	◑	○	●

○ MAY PRECLUDE THE USE OF THIS BMP
◑ CAN BE OVERCOME BY GOOD SITE DESIGN
● GENERALLY NOT A RESTRICTION

Figure 10-3 Site Restrictions of Structural BMPs

	1-YEAR STORM	10-YEAR STORM	100-YEAR STORM	VOLUME CONTROL	GROUNDWATER RECHARGE	EROSION CONTROL	STREAMBANK PROTECTION
WET (RETENTION) POND	●	●	●	●	○	◑	●
EXTENDED DETENTION POND	●	●	●	●	○	◑	●
WETLAND SYSTEM	●	◑	○	◑	◑	●	●
INFILTRATION TRENCH	◑	◑	○	◑	●	◑	◑
BIORETENTION AREA	◑	○	○	◑	●	◑	○
FILTER STRIP	◑	○	○	○	◑	●	◑
VEGETATED SWALE	●	◑	○	○	◑	●	◑
SAND FILTER	◑	○	○	●	◑	◑	◑
PERMEABLE PAVEMENTS	◑	○	○	◑	◑	◑	○

○ WILL NOT CONTRIBUTE
◑ CAN CONTRIBUTE WITH GOOD SITE DESIGN
● GENERALLY DOES NOT CONTRIBUTE

Figure 10-4 Hydrologic Benefits of Structural BMPs

	SEDIMENT	PHOSPHORUS	NITROGEN	OXYGEN DEMAND	HEAVY METALS	PATHOGENS	TEMPERATURE
WET (RETENTION) POND	●	●	◑	◑	●	○	○
EXTENDED DETENTION POND	●	◑	◑	◑	◑	○	○
WETLAND SYSTEM	●	◑	○	●	●	○	●
INFILTRATION TRENCH	●	●	●	○	●	●	●
BIORETENTION AREA	●	◑	◑	●	●	◑	◑
FILTER STRIP	◑	◑	◑	○	◑	○	○
VEGETATED SWALE	○	◑	◑	○	○	○	○
SAND FILTER	●	◑	○	○	◑	◑	◑
PERMEABLE PAVEMENTS	◑	◑	●	◑	●	○	●

○ NOT EFFECTIVE
◑ MODERATELY EFFECTIVE
● HIGHLY EFFECTIVE

Figure 10-5 Pollutant Control of Structural BMPs

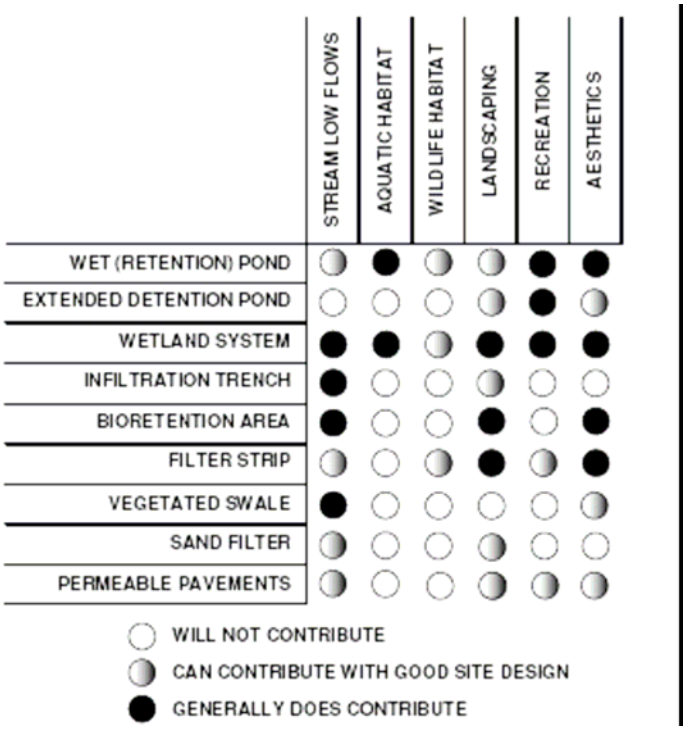

Figure 10-6 Environmental and Aesthetic Amenity Contribution of Structural BMPs

This Page Intentionally Left Blank

The following are publications, documents, models, etc that were used as guidance or direct reference for developing this Article. They are provided here for citation and further review by the user of the contents of this Article.

1. American Public Works Association, U.S. EPA Stormwater Regulations, American Public Works Association, Chicago, Illinois, 1988.

2. American Society of Civil Engineers and the Water Pollution Control Federation, Design and Construction of Sanitary and Storm Sewers, A.S.C.E. Manual of Engineering Practice, No. 77 (W.P.C.F. Manual of Practice, No. 9) American Society of Civil Engineers, New York, New York, 1960.

3. APWA Research Foundation, Water Quality: Urban Runoff Solutions, Special Report #61, May 1991.

4. Athayde, D.N., P.E. Shelly, E.D. Driscoll, D. Gaboury and G. Boyd, Results of the Nationwide Urban Runoff Program: Volume I - Final Report, Water Planning Division, U.S. EPA, NTIS PB84-185552.

5. Brater, Ernest F and Horace Williams King, Handbook of Hydraulics, Sixth Edition, McGraw-Hill Book Company, 1976.

6. Bureau of Reclamation, US Department of the Interior, Design of Small Canal Structures, US Government Printing Office, Denver, Colorado.

7. Bureau of Reclamation, US Department of the Interior, Design of Small Dams, US Government Printing Office, Denver, Colorado, 1987.

8. Bureau of Reclamation, US Department of the Interior, Hydraulic Design of Stilling Basins and Energy Dissipators, Engineering Monograph No. 25, US Government Printing Office, Denver, Colorado 1984.

9. Chow, Ven Te, Open Channel Hydraulics, McGraw-Hill Book Company, Inc., New York, NY, 1959.

10. Charlotte-Mecklenburg Storm Water Services, Storm Water Design Manual, Charlotte, North Carolina, July 1993.

11. Engman, E. T., Roughness Coefficients for Routing Surface Runoff, Journal of Irrigation and Drainage, American Society of Civil Engineers, Volume 112, Number 4, 1986.

12. Environmental Protection Agency, Storm Water Pollution Prevention for Construction Activities, April, 1992.

13. Environmental Protection Agency, Storm Water Pollution Prevention for Industrial Activities, April, 1992.

14. Federal Highway Administration, Drainage of Highway Pavements, Hydraulic Engineering Circular No. 12, Washington, DC, March 1984.

15. Federal Highway Administration, Hydraulic Charts for the Selection of Highway Culverts, Hydraulic Engineering Circular No. 5, US Government Printing Office, Washington, D.C., 1965.

16. Federal Highway Administration, US Department of Transportation Evaluating Scour at Bridges, Hydraulic Engineering Circular No. 18, National Technical Information Service, Springfield, Virginia, February 1991.

17. Federal Highway Administration, US Department of Transportation, Design Charts for Open-Channel Flow, Hydraulic Design Series No.3, August 1961.

18. Federal Highway Administration, US Department of Transportation, Design of Riprap Revetment, Hydraulic Engineering Circular No. 11, US Government Printing Office, Washington, DC, March 1989.

19. Federal Highway Administration, US Department of Transportation, Design of Roadside Channels with Flexible Linings, Hydraulic Engineering Circular No. 15, US Government Printing Office, Washington, DC, April 1988.

20. Federal Highway Administration, US Department of Transportation, Hydraulic Design of Energy Dissipators for Culverts and Channels, Hydraulic Engineering Circular No. 14, US Government Printing Office, Washington, D.C., 1983.

21. Federal Highway Administration, US Department of Transportation, Users Manual for WSPRO, A Computer Model for Water Surface Profile Computations, HY 7, US Government Printing Office, Washington, D.C., March 1990.

22. Federal Highway Administration, US Department of Transportation, Capacity Charts for the Hydraulic Design of Highway Culverts, Hydraulic Engineering Circular No. 10, US Government Printing Office, Washington, D.C., 1982.

23. Federal Highway Administration, US Department of Transportation, Hydraulic Design of Highway Culverts, Hydraulic Design Series No. 5, National Technical Information Service, Springfield, VA.

24. Federal Highway Administration, US Department of Transportation, Hydraulic Design of Improved Inlets for Culverts, Hydraulic Engineering Circular No. 13, US Government Printing Office, Washington, D.C., August 1982.

25. Hydrologic Engineering Center, US Army Corps of Engineers, HEC-2 Water Surface Profiles Users Manual, Davis, CA, September 1990.

26. North Carolina Department of Environment and Natural Resources-Division of Land Quality, Erosion and Sediment Control Planning and Design Manual, North Carolina Department of Environment and Natural Resources-Division of Water Quality, September 1988.

27. North Carolina Department of Environment and Natural Resources-Division of Land Resources, Manual of Stormwater Best Management Practices, North Carolina Department of Environment and Natural Resources-Division of Water Quality, 2005.

28. Metropolitan Washington Council of Governments, A Current Assessment of Urban Best Management Practices - Techniques for Reducing Nonpoint Source Pollution in the Coastal Zone, March 1992.

29. Metropolitan Washington Council of Governments, Controlling Urban Runoff: A Practical Manual for Planning and Designing Urban BMPs, July 1987.

30. North Carolina Department of Transportation, Raleigh, Standard Specifications for Roads and Structures, January 1, 1994.

31. Pitt, Robert and Roger Bannermann, Management Alternatives for Urban Stormwater, EPA/et. al. Nonpoint Pollution Abatement Symposium, pp. TIIH 1 - TIIH 16, April 1985.

32. Poertner, Herbert G., Practices in Detention of Urban Storm Water Runoff, American Public Works Association Special Report No. 43. Chicago, IL, 1974.

33. Portland Cement Association, Design and Construction of Concrete Sewers, Portland Cement Association, Skokie, Illinois, 1968.

34. Portland Cement Association, Handbook of Concrete Culvert Pipe Hydraulics, Portland Cement Association, Chicago, Illinois, 1964.

35. Rossmiller, Ronald L., A Practical Approach to Designing Storm Sewer Systems, American Society of Civil Engineers, Continuing Education Services.

36. Schueler, Thomas R., Controlling Urban Runoff: A Practical Manual for Planning and Designing Urban BMP's, Department of Environmental Programs, Metropolitan Washington Council of Governments, July, 1987.

37. Sheaffer, John R., Urban Storm Drainage Management, pp. 237-250, 1982.

38. Soil Conservation Service, U.S. Department of Agriculture, National Engineering Handbook, Part 630 Hydrology, U.S. Government Printing Office, Washington, D.C., September 1997.

39. Soil Conservation Service, U.S. Department of Agriculture, Earth Dam and Reservoirs, Technical Release No. 60, U.S. Government Printing Office, Washington, D.C., October 1985.

40. Soil Conservation Service, U.S. Department of Agriculture, Urban Hydrology for Small Watersheds, Technical Release No. 55, U.S. Government Printing Office, Washington, D.C., June 1986.

41. Soil Conservation Service, U.S. Department of Agriculture, Computer Program for Project Formulation Hydrology, Technical Release No. 20, U.S. Government Printing Office, Washington, D.C., June 1986.

42. Soil Conservation Service, US Department of Agriculture, Technical Release No. 51 Procedure for Computing Sheet and Rill Erosion on Project Areas, US Government Printing Office, Washington, D.C., September 1977.

43. United States Department of Agriculture Soil Conservation Service, Soil Survey of for Cabarrus County, North Carolina.

44. WP Software, XP-SWMM, Storm Water Management Model with XP Graphical Interface, Tampa, Florida, June 1993.

45. Wright-McLaughlin Engineers, Urban Storm Drainage Criteria Manual, Denver Regional Council of Governments, Denver, Colorado, 1969.

City of Concord
Technical Standards Manual

Article II
Streets & Pedestrian Paths

Concord
NORTH CAROLINA
High Performance Living

TABLE OF CONTENTS
Article II

TABLES AND FIGURES

TABLES

FIGURES

APPENDICIES

1.0 Purpose

The purpose of this Article is to protect the safety of the traveling public in the City and to create a quality street network that will not require pre-mature maintenance. All public streets inside the municipal limits of the City must be constructed in conformance with City standards and specifications. If any conflicts arise between a City and North Carolina State Highway Commission standard, the more restrictive standard will apply.

1.1. The Director of Transportation, in consultation with other City departments and state agencies, may allow modifications to the design criteria. Modifications to the design criteria:

a. Must be based on sound engineering principles and practices,

b. Must not create an unsafe or hazardous situation,

c. Must be equivalent to the efficiency, functionality, durability, structural integrity, and long-term maintenance of the minimum criteria in this Article.

d. Classifications must be in conformance with the current City of Concord Transportation Plan.

1.2. The Director of Transportation is authorized to require studies or other pertinent information to help support or justify the modification.

2.0 Basic Design Considerations

Streets must be designed to accommodate the volume and type of traffic they are intended to serve and the geometry of the landscape on which they will be located.

2.1. A selection of standard details is provided in the City of Concord Manual of Standard Details to be used in conjunction with this Article. In the event of a conflict between the standard details and the provisions of this Article, the strictest standard will apply.

2.2. **Traffic Volumes**. The Average Daily Traffic (ADT) volume is a measurement of the users' demand for a street. ADT is defined as the total volume during a given time period (in whole days), greater than 1 day and less than 1 year, divided by the number of days in that time period. The current ADT volume for a street can be readily determined when continuous traffic counts are available. When only periodic counts are taken, the ADT volume can be estimated by adjusting the periodic counts according to such factors as the season, month, or day of the week. If the ADT of a street is unknown, traffic count studies may be required to determine the design volume.

2.3. **Functional Classifications**. Individual streets do not serve travel independently of one another. Most vehicular travel involves movement through a network of streets. Therefore, the functional classification of a street must be determined before design criteria can be established for any proposed improvement. Functional classifications are based on the nature of the services streets are intended to provide, combined with the proposed layout and location of new streets. Known or estimated Average Daily Traffic (ADT) may be used to determine whether a street needs a higher classification than that based solely on function. Table 2-1 identifies some general characteristics of each street classification. To verify the functional classification of existing streets in the City's transportation service area, please refer to the City's Transportation Plan. For the purposes of the City's

ordinances and these technical standards, the highest classification for the same street between that of the City or the NCDOT shall be used to determine the appropriate standards which apply. *Functional classifications for proposed streets must be approved by the Director of Transportation prior to the final design of roadway layouts and preliminary plats.*

Table 2-1: Functional Classifications.

Classification	Function
Freeway or Expressway	Serves substantial statewide or interstate travel and exists solely to serve vehicular traffic; does not serve pedestrian and bicycle traffic
Major Thoroughfare (Includes Boulevard)	Provides for expeditious movement of high volumes of traffic within and through urban areas
Minor Thoroughfare	Collects traffic from local streets and collectors and carries it to the major thoroughfare system; supplements the major thoroughfare system by facilitating minor thru traffic movements; and sometimes serves adjacent property
Major Collector	Serves intra-county travel corridors and traffic generators and provides access to the thoroughfare system
Minor Collector	Provides service to small local communities and traffic generators and provides access to the major collector system
Local Street	Provides access to adjacent property over relatively short distances
Alley	Provides access to adjacent property, typically to the rear of the structures located on the property served, and usually serves as a route for utilities, garbage collection, and garage access in residential areas

2.4. **Service Classifications.** Major collectors, minor collectors, local streets, and alleys may also be categorized as residential or non-residential.

a. *Residential Streets*. Residential streets serve residential property. In general, 50% or more of the properties fronting a residential street are zoned for residential purposes.

b. *Non-Residential Streets*. When less than 50% of the street frontage is adjacent to residential property, the street is considered a non-residential street.

2.5. **Terrain Classifications**. Two terrain classifications are applicable to the Concord area. These classifications affect street design criteria. All streets should be designed in accordance with the level terrain classification unless the necessary supporting data is presented and approved by the Director of Transportation for each street section designed using rolling terrain classification. The term "slope" in this subsection includes the rise and fall of the existing topography measured both parallel and perpendicular to the centerline of the proposed street.

a. *Level.* Slopes in a level terrain range from 0% to 8%. In level terrain, horizontal and vertical street sight distances are generally long or can be designed to be so without construction difficulties.

b. *Rolling.* Slopes in a rolling terrain range from 8.1% to 15%. Natural slopes consistently rise above and fall below the street grade line, and occasional steep slopes offer some restriction to normal highway horizontal and vertical alignment.

Rolling Terrain Classification Request

1. Memo with reasoning for request that indicates the section of the proposed classification by the range of stations for each street included in the request.
2. Plan view showing the horizontal alignment with appropriate stationing, existing topography, and other pertinent plan view elements.
3. Profile view showing existing and proposed vertical alignment with the grades appropriately labeled and stationing corresponding with the plan view.

2.6. **Design Speeds.** Designers should use the highest design speed that is practical to attain the best possible degree of safety, mobility, and efficiency. The design speed of a city street should be five (5) miles per hour (mph) above the anticipated posted speed. Geometric design features should be consistent with the selected design speed. Design speeds for each functional classification are provided in Table 2-2.

Table 2-2: Design Speeds.

Classification	Minimum Design Speed (mph)	
	Level Terrain	**Rolling Terrain**
Freeway or Expressway	*	*
Major Thoroughfare	60	55
Minor Thoroughfare	50	45
Major Collector	50	50
Minor Collector	40	40
Local Street	30	30
Alley	20	15

*Reference NCDOT Guidelines

3.0 Cross-Section Standards

3.1. Widths.

a. *Rights-of-Way.* Right-of-way widths are based on the street classification. Rights-of-way must be at least as wide as the minimum widths provided in Table 3-1. Rights-of-way must be platted and dedicated in the location and at the width shown on the approved plans.

Table 3-1: Minimum Right-of-Way Widths

Classification		**Minimum Right-of-Way Width (feet)**
Major Thoroughfare	All	100
Minor Thoroughfare	All	80
Collector	Non-Residential	71
	Residential	63
Local Street	All	50
Alley*	All	20
Cul-de-Sac	Non-Residential	80 67.5-foot radius
	Residential	60 60-foot radius

*Alleys may be either R/W or Access Easement. Alleys will not be accepted by the City of Concord for maintenance.

b. *Pavement*. Pavement widths are based on the street classifications and locations. Fire, or other City codes may dictate different widths, the minimum width that satisfies all standards will apply. The width from the edge of pavement perpendicularly to the edge of pavement must be at least as wide as the minimum widths provided in Table 3-2:

Table 3-2: Minimum Pavement Widths

Classification		Minimum Pavement Width (feet)
Major Thoroughfare	All	24 for each of two divided sections
Minor Thoroughfare	All	24 for each of two divided sections or 36' non-divided
Collector	Non-Residential	30
	Residential with On-Street Parallel Parking	34
	Residential without On-Street Parking	22
Local Street	All	20
Alley	All	16
Cul-de-Sac	Non-Residential	46-foot radius
	Residential	38.5-foot radius

3.2. **Materials**. All work and materials shall conform to the latest edition of the NCDOT Standard Specifications for Roads and Structures unless otherwise specified. The following material standards and thicknesses represent the minimum acceptable standards of the City. Pavement designs must consider existing soil types and geotechnical conditions. The Engineering Department will review pavement designs. Failure to meet the following requirements may result in the delay or prevention of street acceptance by the City of Concord or NCDOT.

All applicable compaction, soils, concrete, or other required tests will be performed at no cost to the City and by an inspector sufficiently certified to perform such tests. Results from all applicable tests, all pavement and concrete mix designs, and all other material specifications shall be provided to the City inspector. The developer shall maintain their own records of all tests and inspections throughout the construction period. These records shall, at a minimum and as applicable, include information such as dates inspections are requested and performed, inspector's name, results of inspections, re-inspections, dates and results of tests, and other applicable information as may be necessary.

a. Subgrade. Shape the roadway to conform to the lines, grades and typical sections shown on the plans. Strip all existing vegetation from the ground surface wherever shaping of the roadway is to be done. Use all suitable surplus material in the construction of the roadway or stockpile for use in shoulder construction. Dispose of surplus material in excess of that needed for roadway or shoulder construction as waste. Remove all unsuitable material, boulders and all vegetative matter and replace with suitable material. Obtain suitable material, when not available from the shaping or fine grading operation, from roadway excavation or borrow sources.

1. Preparation of Subgrade. Shape the subgrade to the lines, grades and typical sections shown on the plans.
2. Compaction of Subgrade. Compact all material to a depth of 8 inches below the finished surface of the subgrade to a density equal to at least 100% of that obtained by compacting a sample of the material in accordance with AASHTO T 99 as modified by NCDOT. These modified testing procedures can be found in the NCDOT Conventional Density Operator's Manual. Provide private lab soil compaction reports to the inspector for random subgrade tests every 200 LF, 3 minimum per street, and 2 per cul-de-sac, or as directed by the inspector.
3. New densities may be required if it has been more than 7 days since the densities were performed or there has been a rain event greater than ½".
4. Contractor should perform a self-proofroll and repair deficiencies before calling for an inspection.
5. Subgrade should be neat, clean, trimmed, and rolled down.
6. After all above items have been completed, then a subgrade proofroll can be scheduled and performed with the inspector.
7. Base Course must be placed within 7 days or before any ½" or greater rain event or another proofroll may be required.

b. Base Course. Prior to the placement of the base course the subgrade shall be sufficiently compacted, inspected and accepted by the City inspector. The material for the base course of the street must be crusher-run stone with aggregates ranging from one and one-half (1½) inch diameter particles to dust and must meet the standards of NCDOT's latest edition of Standard Specifications for Roads and Structures. The City inspector shall be given a (24) twenty-four-hour notification to inspect the base course prior to the application of the intermediate course. All deficiency repairs are to be monitored by a City inspector and accepted prior to application of the intermediate course.

1. The material should consist of tough durable aggregate, containing sufficient fines to ensure a well-bonded and uniform base after compaction.
2. The aggregate must be free from an excess of flat, elongated, soft disintegrated pieces, and should not contain clay, silt, vegetative, or other objectionable matter.
3. The mixing and shaping of the base course material must be performed with a power-driven motor grader, equipped with a blade not less than ten (10) feet long, and equal to or equivalent to a full-size motor grader with 125 horsepower or greater.
4. All edges and manholes are to be trimmed to the proper depth. Remove any loose stone. All manhole covers shall be adjusted to final pavement grade and slope.
5. The base shall be compacted to 100% of the maximum density obtainable with the Modified Proctor Test (AASHTO-T180) by rolling with ring or temping roller or with pneumatic tired roller with a minimum weight of ten tons. When completed, the base course must be smooth, hard, dense, unyielding and well bonded. The procedures for the Modified AASHTO-T180 test can be found in the NCDOT Conventional Density Operator's Manual. Provide private lab stone base compaction reports to the inspector.
6. New densities may be required if it has been more than 7 days since the densities were performed or there has been a rain event greater than ½".
7. Contractor shall perform a self-proofroll and repair deficiencies before calling for an inspection.
8. After all above items have been completed then a proofroll can be scheduled and performed with the inspector.
9. Intermediate Course must be placed within 7 days or before any ½" or greater rain event or another proofroll may be required.

c. Prime Coat. If application of the intermediate course is not completed within seven (7) days following stone base approval, a prime coat shall be applied. The material for the prime coat must be consistent with NCDOT Standard Specifications for Roads and Structures.

d. Intermediate Course. The material for the intermediate course of the street must be consistent with NCDOT Standard Specifications for Roads and Structures. Asphalt plants providing the material for the intermediate course must be certified by NCDOT. The City inspector shall be given a (24) twenty-four-hour notification to inspect the

intermediate course prior to the application of the first lift of the surface course. All deficiency repairs are to be monitored by a City inspector and accepted prior to application of the first lift of the surface course.

1. Compaction must meet NCDOT requirements. The contractor shall perform quality control on asphalt by performing random density tests every 200 LF, 3 minimum per street, and 2 in each cul-de-sac, or as directed by inspector. Superpave mixes are to be compacted 90.0% of the maximum specific gravity. Provide results to inspector the following day.

e. Surface Course. The material for the surface course of the street must be consistent with NCDOT Standard Specifications for Roads and Structures. Asphalt plants providing the material for the surface course must be certified by NCDOT. The City inspector shall be given a (72) seventy-two-hour notification to inspect the initial surface course lift prior to the application of the final lift. All deficiency repairs are to be monitored by a City inspector and accepted prior to the application of the final lift of asphalt surface course.

1. The surface lift should be installed in 2 separate lifts a minimum of 1" thick for Local Streets, and 1.5" thick for higher classifications. The first lift should be applied directly following the application, inspection, and acceptance of the intermediate course, and the second lift is to be installed after all other requirements for City acceptance have been met. All known base failures shall be repaired prior to the application of the final lift of asphalt surface course.

2. Compaction must meet NCDOT requirements. The contractor shall perform quality control on asphalt by performing random density tests every 200 LF, 3 minimum per street, and 2 in each cul-de-sac, or as directed by inspector. Superpave mixes are to be compacted 90.0% of the maximum specific gravity. Provide results to inspector the following day.

Table 3-3: Base, Intermediate, and Surface Courses

Classification		Base Course	Intermediate Course	Surface Course
Major Thoroughfare	All	*	*	*
Minor Thoroughfare	All	*	*	*
Major Collector	Non-Residential	*	*	*
	Residential	10" CABC or 5" B-25.0C	2.25" I-19.0C	3.0" S 9.5B
Minor Collector	Non-Residential	*	*	*
	Residential	10" CABC or 5" B-25.0C	2.25" I-19.0C	3.0" S 9.5B
Local Street	Non-Residential	*	*	*
	Residential	8" CABC or 4" B-25.0C	2.25" I-19.0C	2.5" S 9.5B
Alley	All	8"CABC		1.5" S 9.5B

* Pavement sections must be designed on a case by case basis with the residential specifications being the minimum requirements.

f. *Tack Coat.* The material for tack coats must be consistent with NCDOT Standard Specifications for Roads and Structures. Asphalt plants providing the material for tack coats must be certified by NCDOT.

1. **Tack coats** must be applied between each layer of asphalt to be placed.

g. **Street Shoulder**. Fill embankments must be formed of suitable materials placed in successive layers of not more than six (6) inches in depth for the full width of the cross section, including the width of the slope area. All materials for fill embankments must be consistent with NCDOT Standard Specifications for Roads and Structures.

1. No stumps, trees, brush, rubbish or other unsuitable materials or substances shall be placed in the embankments within any right-of-way or easement.
2. Each successive six-inch layer shall be thoroughly compacted by a sheepsfoot tamping roller, ten-ton power roller, pneumatic-tired roller or other method approved by the Director of Engineering. Embankments over and around all pipes and culverts shall be of select material, placed and thoroughly tamped and compacted as directed by the Director of Engineering or their representative. Any soft spots or pumping areas must be removed and replaced in the manner stated above until satisfactory compaction is achieved.

h. **Concrete**. ALL concrete used for streets, curb and gutter, sidewalks and multi-use paths, etc. shall have a minimum compressive strength of 3600 PSI at 28 days. This requirement shall be provided regardless of any lesser compressive strength specified in the NCDOT Standard Specifications for Roads and Structures. The contractor shall prepare concrete test cylinders in accordance with section 1000 of the NCDOT Standard Specifications for Roads and Structures at the direction of the project inspector. All equipment and cylinder molds shall be furnished by the contractor. It shall be the responsibility of the contractor to protect the cylinders until such time as they are transported for testing. Testing for projects shall be performed by an independent testing lab sufficiently certified to perform such tests, at no cost to the City. The contractor shall provide equipment and perform tests on concrete for a maximum slump and air content as defined in Section 1000 of the NCDOT Standard Specifications for Roads and Structures. These tests shall be performed at a frequency established by the inspector. Materials failing to meet the specifications shall be removed by the contractor.

1. All concrete shall be cured with 100% Resin Base, white pigmented curing compound which meets ASTM Specifications C-309, Type 1, applied at a uniform rate of one (1) gallon to 400 square feet within 24 hours of placement of concrete.

i. *Backfill*. All backfill shall be non-plastic in nature, free from roots, vegetative matter, waste, construction material or other objectionable material. Said material shall be capable of being compacted by mechanical means and the material shall have no tendency to flow or behave in a plastic manner under the tamping blows or proof rolling.

1. Materials deemed by the inspector as unsuitable for backfill purposes shall be removed and replaced with select backfill material.

j. Concrete or asphalt shall not be placed until the air temperature measured at the location of the paving operation is at 35 degrees F and rising by 10:00 a.m. Concrete or paving operations should be suspended when the air temperature is 40 degrees F and descending. The contractor shall protect freshly placed concrete or asphalt in accordance with Sections 420 (Concrete Structures), 600 (Asphalt Bases And Pavements), and 700 (Concrete Pavements And Shoulders) of the NCDOT Standard Specifications for Roads and Structures when the air temperature is at or below 35 degrees F and the concrete has not obtained an age of 72 hours.

4.0 Cul-de-Sac Design Standards

4.1. Where a turn-around is required on a public or private street, a properly dimensioned cul-de-sac should be provided. "Hammer-head" designs will not be permitted.

4.2. **Design Standard Exceptions.** Cul-de-sacs are subject to the same design guidelines as those given for the appropriate street classification, with the exception of the following design standards that are specific to cul-de-sacs.

a. *Service Limits.* A cul-de-sac can serve no more than twenty (20) residential units.

b. *Lengths.* Cul-de-sacs must not exceed the lengths provided in Table 4-2. Length is measured from the center of the terminus to the centerline of the closest intersecting street providing access to the cul-de-sac.

Table 4-2: Maximum Lengths for Cul-de-Sacs.

Zoning District	Maximum Length (feet)
AG	1,000
B-1	500
C-1	500
C-2	500
CC	300
CD	1,500
I-1	1,500
I-2	1,500
O-I	500
PUD	500
RC	300
RE/RL	1,000
RM-1	800
RM-2	800
RU	300
RV	600

c. *Connectivity Provisions.* If the cul-de-sac is located along a corridor included in the City of Concord's Transportation Plan or if the cul-de-sac is located along a corridor that will serve as a future thru street in accordance with a recorded subdivision plat or site plan, preliminary and final engineering plans must show a stub (extension of the street right-of-way) from the terminus of the cul-de-sac to the edge of the area being developed. Prior to final plat the stub must be duly signed in the field as to the potential for future extension.

d. *Termini.* The terminus of the cul-de-sac must be designed to allow vehicles to turn around and exit to the adjoining street.

1. *Radii*. The radius for the terminus (bulb or turnaround) must not be less than forty (40) feet to the face of curb as shown on the detail drawings.
2. *Islands*. An island may be proposed or required in the center of the terminus of the cul-de-sac. Islands will be reviewed on a case-by-case-basis.

5.0 Slope Standards

5.1. **Longitudinal Grade.** Longitudinal grades may range between one percent (1.0%) and twelve percent (12%). Table 5-1 identifies the maximum longitudinal grade for each functional classification.

Table 5-1: Maximum Longitudinal Grades.

Classification	Conditions (Terrain or Proximity to Intersection)	Maximum Grade
Freeway or Expressway		*
Major Thoroughfare		*
Minor Thoroughfare		*
Major Collector	Level Terrain Rolling Terrain Intersection in ≤ 100 feet	6% 9% 3%
Minor Collector	Level Terrain Rolling Terrain Intersection in ≤ 100 feet	6% 9% 5%
Local Street	Level Terrain Rolling Terrain Intersection in ≤ 100 feet	9% 12% 5%
Alley	Level Terrain Rolling Terrain Intersection in ≤ 100 feet	9% 12% 5%

* Consult the latest edition of AASHTO's *The Policy on Geometric Design of Highways and Streets*.

5.2. **Transverse Grade.**

a. *Street Surface.* Transverse grades on the street surface must have a one-fourth (¼) inch rise to one (1) foot run slope. Superelevation rates, minimum runoff lengths, and methods of distribution should be designed in accordance with AASHTO guidelines.

Table 5-2: Maximum Superelevation Transverse Slope for Minimum Centerline Radius.

Classification	Maximum Superelevation Transverse Slope (feet/feet)	
	Level Terrain	Rolling Terrain
Freeway or Expressway	*	*
Major Thoroughfare	*	*
Minor Thoroughfare	*	*
Major Collector	0.04	0.04
Minor Collector	0.04	0.04
Local Street	normal crown	normal crown
Alley	N/A	N/A

* Consult the latest edition of AASHTO's *The Policy on Geometric Design of Highways and Streets*.

b. Street Shoulder.

1. *Minimum width.* The minimum shoulder width shall be 6 feet wide measured from the edge of pavement. The transverse grade for street shoulders shall be ¼" per foot.

2. *Fill/Cut Slopes*. The maximum transverse grade for fill slopes is a one (1) foot rise to three (3) foot run, and one (1) foot rise to two (2) foot run for cut slopes.

6.0 Curve Standards

6.1. **Horizontal Centerline Curve Radius**. Table 6-1 provides the minimum horizontal centerline curve radii for each functional classification.

Table 6-1: Minimum Horizontal Centerline Curve Radii.

Classification	**Minimum Horizontal Centerline Curve Radii (feet)**	
	Level Terrain	**Rolling Terrain**
Freeway or Expressway	*	*
Major Thoroughfare	*	*
Minor Thoroughfare	*	*
Major Collector	310	230
Minor Collector	310	230
Local Street	230	150
Alley	90	90

* Consult the latest edition of AASHTO's *The Policy on Geometric Design of Highways and Streets*.

6.2. **Tangent Between Reverse Curves**. Table 6-2 provides the minimum tangent between reverse curves for each functional classification.

Table 6-2: Minimum Tangent Between Reverse Curves.

Classification	Minimum Tangent Between Reverse Curves (feet)
Freeway or Expressway	*
Major Thoroughfare	*
Minor Thoroughfare	*
Major Collector	200
Minor Collector	200
Local Street	100
Alley	0

* Consult the latest edition of AASHTO's *The Policy on Geometric Design of Highways and Streets*.

6.3. **Vertical Centerline Curves**. Table 6-3 provides the minimum Rates of Vertical Curvature (K) for each functional and terrain classification.

Table 6-3: Rate of Vertical Curvature (K).**

Classification		Level Terrain	Rolling Terrain
Freeway or Expressway	Crest	*	*
	Sag	*	*
	Stop	*	*
Major Thoroughfare	Crest	*	*
	Sag	*	*
	Stop	*	*
Minor Thoroughfare	Crest	*	*
	Sag	*	*
	Stop	*	*
Major Collector	Crest	45	30
	Sag	45	30
	Stop	20	14
Minor Collector	Crest	45	30
	Sag	45	30
	Stop	20	14
Local Street	Crest	30	20
	Sag	30	20
	Stop	14	9
Alley	Crest	30	20
	Sag	30	20
	Stop	14	9

* Consult the latest edition of AASHTO's *The Policy on Geometric Design of Highways and Streets*.
** K = (Length of the Vertical Curve in Feet) ÷ (Percent Algebraic Difference in the Grades Before and After the Vertical)

7.0 Intersection Standards

7.1. **Angles of Intersection**. When practical, streets must intersect at an angle of ninety (90) degrees. The centerlines of the intersecting streets should remain straight for a minimum of fifty (50) feet from the edge of travel way of the intersecting street. In no case should the angle of intersection be less than seventy (70) degrees.

7.2. **Corners**.

a. *Quantity.* Intersections shall not have more than four (4) corners.

b. *Right-of-Way.* Property lines at intersections must be established so that the distance from the edge of pavement at the street turnout to the property line is at least as great as the distance from the edge of pavement to the property line along the intersecting streets.

1. This property line can be established as a radius or as a sight triangle.
2. Minimum and maximum street right-of-way curve radii are provided in Table 7-1.

Table 7-1: Minimum and Maximum Right-of-Way Curve Radii at Intersections.

Zoning District	Minimum Radii (feet)	Maximum Radii (feet)
AG	30	N/A
B-1	30	45
C-1	30	N/A
C-2	30	N/A
CC	30	45
CD	30	N/A
I-1	30	N/A
I-2	30	N/A
O-I	30	45
PUD	30	45
RC	30	45
RE	30	N/A
RL	30	N/A
RM-1	30	N/A
RM-2	30	N/A
RU	30	N/A
RV	30	45

7.3. **Backs-of-Curb.** Curbs must be rounded at the corners of intersections to facilitate the movement of traffic. The minimum corner radii for backs-of-curb at street intersections are provided in Table 7-2.

Table 7-2: Minimum Corner Radii for Backs-of-Curb at Intersections.

Classification	Minimum Corner Radii (feet)
Freeway or Expressway	*
Major Thoroughfare	*
Minor Thoroughfare	*
Major Collector	30
Minor Collector	30
Local Street	30
Alley	20

* Consult the N.C. Department of Transportation Division of Highways' Transportation Plan.

7.4. **Distances between Intersections**. Proposed streets that intersect opposite sides of the same street (either existing or proposed) should be designed to intersect directly opposite one another as shown in Figure 7-1a.

a. *Minimum lengths for Local Streets and Minor Collectors*.

1. A minimum length of 200 feet between centerlines must separate proposed streets that cannot be aligned to create a shared intersection as shown in Figure 7-1b.
2. A minimum length of 400 feet between centerlines must separate streets with opposing left-hand turns as shown in Figure 7-1c.

b. *Minimum lengths for higher street classifications*. Minimum lengths for higher street classifications must be reviewed and approved by the Director of Transportation, but in no case can the distance be less than 400 feet.

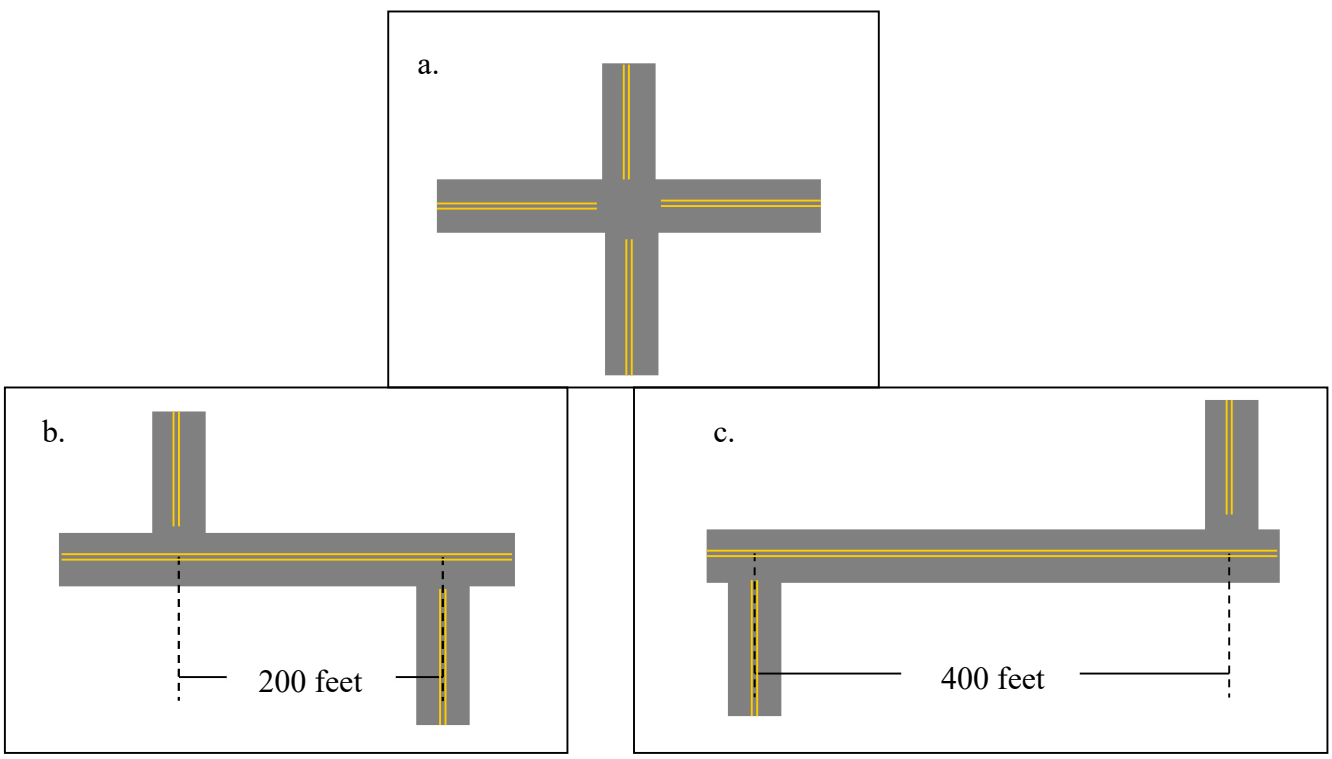

Figure 7-1: Two Streets Intersecting the Same Street.

7.5. **Sight Triangle Easements**. Sight triangle easements are required in every zoning district of the City except for the CC District. Sight triangle easements must be shown on all plans and recorded on a final plat. NCDOT may have separate and/or additional requirements regarding Sight Triangles, the strictest standard that satisfies all requirements will apply. Dimensions given in this section are the minimums, evaluation of sight distance may require larger sight triangle easements.

A. Type 1

a. Type 1 sight triangles must be maintained on property located at intersections of:

1. Two streets of any classification
2. A street and a railroad
3. A street and a non-residential driveway

b. Size and Measurement - A sample illustration is provided in Figure 7-2.

1. The lengths of the Type 1 sight triangle legs are based on the widths of the intersecting rights-of-way where the intersection occurs.

Table 7-3: Sight Triangle Leg Length along a Right-of-Way
Measured from the Point of Intersection

Right-of-Way Width* (feet)	Length (F or G) (feet)
≤50	25
60	30
70	35
80	40
90	45
≥100	50
*Or pavement width where no R/W exists.	

2. Type 1 Sight triangles are measured from the following three points as shown on Figure 7-2:

a. *Point 1.* The point of intersection of two right-of-way lines or driveway pavement edge.

b. *Point 2.* The point along right-of-way one (1) a distance from Point 1 as determined by the width of right-of-way one (1) in accordance with Table 7-3, and

c. *Point 3.* The point along right-of-way two (2) a distance from Point 1 as determined by the width of right-of-way two (2) in accordance with Table 7-3.

B. Type 2

a. In addition to Type 1 sight triangles, Type 2 sight triangles must be maintained on property located at intersections of:

1. Any street with a street classified as a collector or higher.

2. Any non-residential driveway with a street classified as a collector or higher.

b. **Size and Measurement** - A sample illustration is provided in Figure 7-2.

1. Type 2 Sight triangles are measured from the following three points as shown on Figure 7-2:

   a. *Point A.* The point of intersection of two right-of-way lines or R/W and driveway pavement edge.

   b. *Point B.* The point along right-of-way one (1) a distance of 10 feet from Point A, and

   c. *Point C.* The point along right-of-way two (2) a distance of 70 feet from Point A.

Figure 7-2: Type 1 & 2 Sight Triangle Sample Illustration

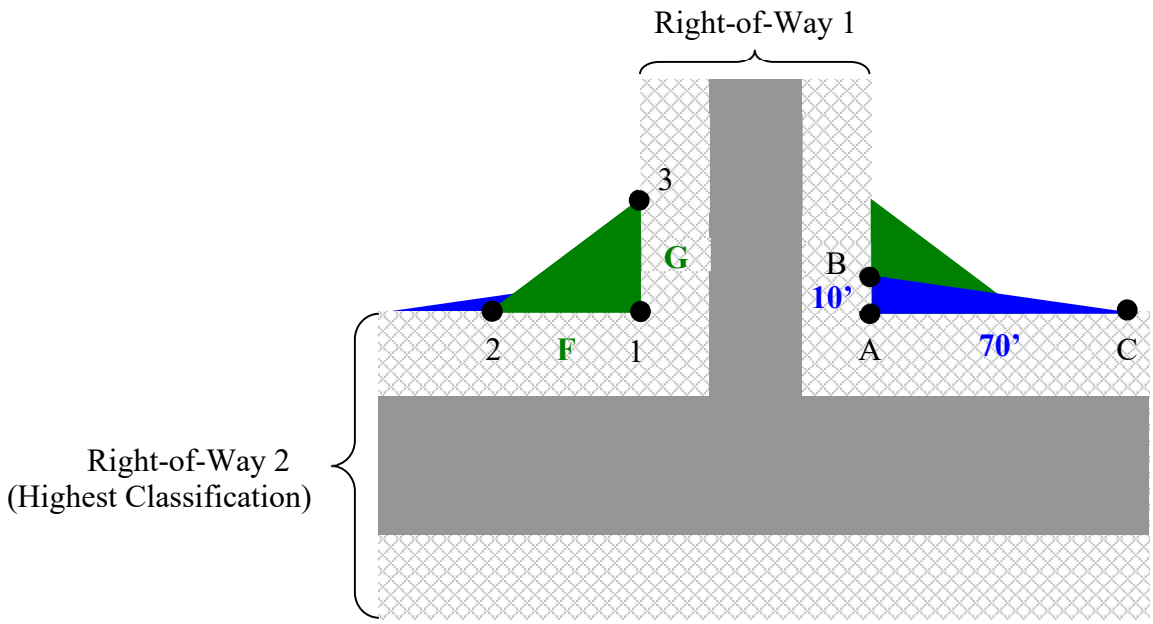

C. Type 3

a. Type 3 Sight Triangles must be maintained on property located at intersections of:

1. Residential driveways and streets

   b. Size and Measurement - A sample illustration is provided in Figure 7-3.

1. Sight triangles are measured from the following three points:

   a. Point 1. The point of intersection of the street right-of-way line and the edge of the driveway pavement,

   b. Point 2. The point along the street right-of-way a distance of ten (10) feet from Point 1, and

   c. Point 3. The point along the edge of the driveway pavement a distance of ten (10) feet from Point 1

Figure 7-3: Type 3 Sight Triangle Sample Illustration

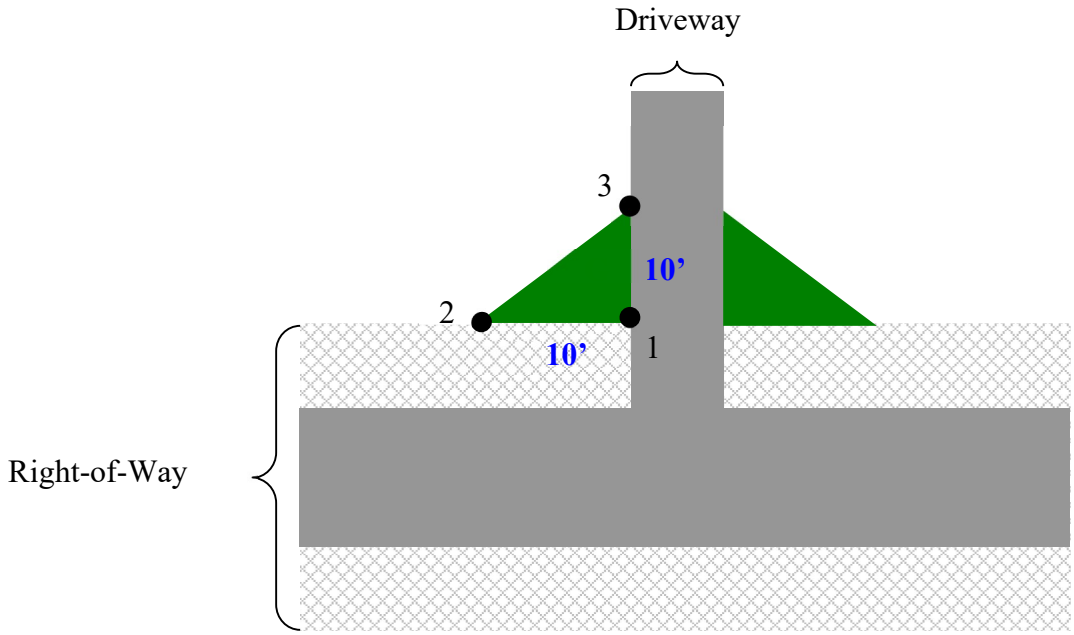

D. Objects Not Allowed within Sight Triangles. Objects within sight triangles must be restricted to give the users of the street or driveway an unobstructed view of oncoming vehicles and pedestrians. No structures, berms, vegetation, or other visual obstruction with a height equal to or greater than two (2) feet above the street surface elevation is allowed within the sight triangle, except those listed in the following subsection. The dimensions given represent the dimensions of the Sight Triangle Easements as measured at the R/W.

E. Objects Allowed within Sight Triangles. The following objects are allowed within sight triangles:

1. Public utility poles,
2. Official warning signs or signals,
3. Supporting members or appurtenances to permanent buildings lawfully existing prior to April 11, 1996.
4. Other signs that meet all of the following criteria:
   - **a.** Conform to the City's sign ordinance, and
   - **b.** Are mounted at a height equal to or greater than ten (10) feet above the street surface, and
   - **c.** Have supports that do not obscure the view of oncoming vehicles and pedestrians.

7.6. **Sight Distance**. Sight distance shall be measured at a height of 3.5' above the ground with a minimum of 1' vertical separation between the highest obstruction at ground level and the sight line, and 5' between the sight line and the bottom of tree canopies, or objects above the surface. Table 7-6 gives the sight distance for stop controlled intersections.

Table 7-6

Design Speed (mph)	Minimum Intersection Sight Distance (ISD)*		
	Passenger Cars (ft.) Left / Right	Single Unit Trucks (ft.) Left / Right	Combination Trucks (ft.) Left / Right
20	225 / 195	279 / 250	337 / 310
25	280 / 240	348 / 315	422 / 385
30	335 / 290	418 / 375	506 / 465
35	390 / 335	488 / 440	590 / 540
40	445 / 385	557 / 500	675 / 620
45	500 / 430	627 / 565	759 / 695
50	555 / 480	697 / 625	843 / 770
55	610 / 530	766 / 685	927 / 850

*Values are based on case B1 and B2 from AASHTO Policy on Geometric Design of Highways and Streets with base condition of two-lane highway with no median and grades <=3%. For conditions outside of the base conditions appropriate adjustments should be made in accordance with AASHTO Policy.

Figure 7-6

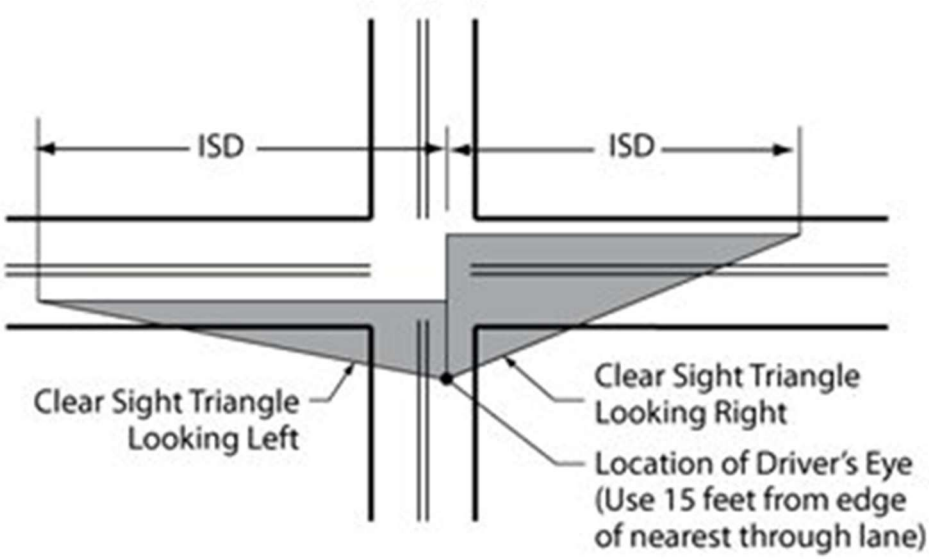

7.7. **Roundabouts/Traffic Circles**. Roundabouts may be required at certain intersections within developments to provide traffic calming and help create a safe environment for drivers and pedestrians. Locations of Roundabouts will be determined by the Planning and Transportation Departments. Designs must be reviewed and approved by the Director of Transportation or their representative.

8.0 Median and Island Standards

8.1. *Where Required.* Entrance roads shall include a median in conformance with the City's development ordinances, except that the Director of Transportation may waive this requirement if the Director determines that such a median is not practical, or such installation would create a hazard.

8.2. *Size.* Islands must be a minimum of 75 square feet and entrance medians must be a minimum of one half the required stem length of the intersecting street(s) and a minimum of 4 feet wide. Lengths of non-entrance medians are to be approved by the Transportation Director. Where median widths are specified, a median of not less than the designated width must be provided.

8.3. *Contents.* Structures, permanent materials or plantings within the island or median should not obscure the visibility of cars entering a cross street for a distance of 20 feet back from the curb face of the cross street, unless a larger setback is needed due to inadequate sight distance created by horizontal or vertical curve alignment. Islands and medians should be landscaped at a density equivalent to a Class "A" buffer as set forth in the Landscaping Standards of in the City's development ordinances.

8.4. *Specifications*. The nose of the median must be at least 6 feet from edge of the perpendicular thru lane. Standard 2'-6" curb and gutter should be used unless 1'-6" is approved. A minimum 14-foot travel way must be provided on each side of the median/island. Medians and islands which encroach into NCDOT R/W must be approved by NCDOT.

9.0 Drainage Standards

A drainage system must be provided that adequately facilitates the movement of stormwater off and under streets. This drainage system may include curbs and gutters, catch basins, stormwater pipes, and graded channels. Each component of the drainage system should be designed by a registered professional engineer and installed in accordance to City construction specifications and standards. Please refer to Article 1 Section 3 of these Technical Standards.

9.1. **Curbs and Gutters.**

a. *Required Locations.* Concrete curbs and gutters must be included on all new streets, on all existing streets which the property to be subdivided or developed fronts, and on all streets that provide access to a new development or subdivision, except those listed in the following subsection.

b. *Exemptions.* Concrete curbs and gutters are not required along the following streets:

1. Interstate highways,
2. Numbered State highways with topography that does not allow for reasonable or practical installation, and
3. Numbered State highways where the N.C. Department of Transportation stipulates no curb and gutter should be installed.

c. *Specifications.*

1. Curbs and gutters must be built in accordance with City of Concord Standards and

NCDOT Standards. Standard 2'-6" curb and gutter is to be used on all collector streets. Valley curb is allowed only on local streets and alleys.

2. All excess concrete on the front edge (lip) of gutter shall be removed when curb and gutter is poured with a machine.
3. All curb and gutter shall be backfilled with soil approved by the inspector within 48 hours after construction to prevent erosion.

9.2. **Catch Basins.**

a. *Required Locations.* Catch basins shall be located:

1. As outlined in Article 1 of these Technical Standards, and
2. On both sides of the street at low points.

b. *Specifications*.

1. Catch basin frames and grates must be in accordance with NCDOT Standards. Improvised grates will not be acceptable.
2. Catch basin frames must be cast with the following statement: "Dump No Waste Drains to Stream" or a comparable statement as approved by the Director of Engineering.
3. Catch basins must be built in accordance with NCDOT Standards.
4. Catch basin walls must be built straight with inside joints struck smooth. Precast catch basins may be acceptable with the approval of the Director of Engineering.
5. Roll-over frame and grate inlets are not permitted within driveways.

9.3. **Pipes**.

a. *Stormwater*.

1. *Required Locations.* Stormwater pipes should be placed at all low points in the street grade to transmit storm water transversely across the street. Additionally, stormwater pipes should be parallel to the street, but not under the street, unless transmitting stormwater from one catch basin to another on the opposite side of the street.
2. *Size.* The minimum pipe diameter shall be fifteen (15) inches, regardless of the size of the drainage area.
3. *Depth.* The minimum cover for all pipe shall be two (2) feet, or as otherwise approved for Class IV and V RCP in accordance with NCDOT Standards.
4. *Material.* All pipe must be concrete conforming to the NCDOT Standard Specifications of Road and Structures. For special conditions, alternative pipe materials recommended by the manufacturer for the type of installation involved and approved by the Director of Engineering will be considered. Any concrete pipe laid between the concrete curbs shall be reinforced.

b. *Construction.* All pipe must be laid with the bell or groove upgrade and joint entirely interlocking.

c. *Groundwater.* Subdrainage must be provided where the groundwater table is within two (2) feet of the subgrade. Subdrainage design must be approved by the Director of Engineering.

d. *Graded Channels.* Ditches proposed within the street rights-of-way will need to be approved on a case to case basis. Ditches should be a minimum of thirty-six (36) inches deep and two (2) feet in width. Ditches, swales, or other drainage features shall not be designed or allowed to concentrate flow onto or across sidewalks.

10.0 Sidewalk Standards

10.1. **Locations**. Sidewalks should be provided for the safe movement of pedestrians, separate from the movement of vehicular traffic, through residential, commercial, and industrial areas, as well as public places. Sidewalks must be constructed along both sides of all new streets in a subdivision, along any street which the property to be subdivided fronts and any street which provides access to the subdivision. Multi-Family and Non-Residential developments shall provide sidewalk along the frontage of existing streets regardless of whether the site property is being subdivided. Sidewalks may not be required along interstate highways not designed for curb and gutter. Where identified in adopted City plans, Multi-Use paths will replace sidewalk where required.

a. Except in unusual circumstances, sidewalk must be located a minimum of (8) eight feet from the back of the curb. A recorded public sidewalk easement is required for all sidewalk located outside the public right-of-way, the width shall be equal to the distance from the right-of-way line to the back of the sidewalk plus a minimum of two feet or to the face of building, whichever is less. The sidewalk easement must be recorded with the Cabarrus County Register of Deeds prior to issuance of a certificate of occupancy for the corresponding building(s).

b. Along NCDOT highways where curb and gutter is not recommended or approved by NCDOT, the minimum clear zone for sidewalks and multi-use paths is 24' as measured from the edge of the closest parallel travel lane subject to approval by NCDOT.

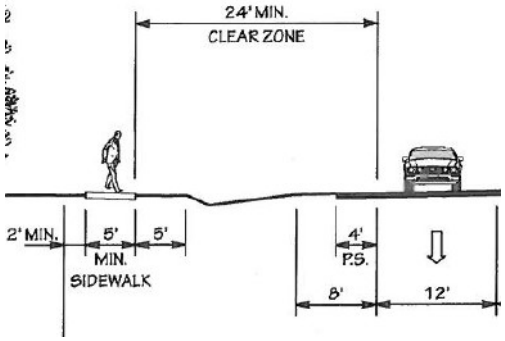

10.2. **Specifications**. Sidewalks must:

a. Have a minimum five (5) foot width;

b. Be constructed of not less than three thousand six hundred (3,600) pound-per-square-inch concrete,

c. Be a minimum of four (4) inches thick when adjacent to standard 30" curb and gutter,

the sidewalk must be six (6) inches thick when placed adjacent to valley curb and gutter and no planting strip is present,

d. Be a minimum of six (6) inches thick at driveway crossings

e. Be constructed on a properly graded base with subgrade compacted to 95% of the maximum density obtainable with the Standard Proctor Test,

f. Have a lateral slope of one-quarter (1/4) inch per foot toward the street,

g. Be steel-troweled and light broom finished and cured properly,

h. Have tooled joints at intervals of not more than five (5) feet and expansion joints at intervals of not more than forty (40) feet,

i. Meet all current Americans with Disabilities Act (ADA) standards, and

j. Meet NCDOT specifications for concrete sidewalks, stricter of any specification applies,

k. Be designed and located so as to prevent transmission of drainage water from swales, ditches or other graded channels across the surface.

10.3. **Transitions to Street Grade**. Access ramps must meet current ADA and NCDOT standards and be constructed with materials that are approved by the Director of Transportation. Truncated dome mats at all access ramps shall be red in color.

11.0 Curb and Gutter, and Sidewalk Exemptions

Applicability. Refer to Article 10 of the UDO.

12.0 Guardrails

12.1. **Applicability**.

a. Guardrails must be provided in all areas required in accordance with the NCDOT Roadway Design Manual.

13.0 Street and Subdivision Naming Standards

13.1. **Uniqueness**.

a. Proposed street and subdivision names must not duplicate nor too closely approximate phonetically the name of any street within Cabarrus County.

b. Where proposed streets are extensions of existing streets, the existing street names shall be used except where a new name can reasonably be used to facilitate proper house numbering or to avoid further street name duplication.

13.2. **Labels**. In addition to names to identify new streets, the following labels must be included:

a. A street oriented in a general north-south direction must be labeled a “Street;”

b. A street oriented in a general east-west direction must be labeled an “Avenue;”

c. A street that changes direction may be labeled a “Drive,” “Lane,” or “Road;”

d. A street that forms a loop where both ends intersect with the same street may labeled a

"Circle;" and

e. A cul-de-sac or street terminating in a similar dead-end must be labeled a "Place" if oriented in a north-south direction and a "Court" if oriented in an east-west direction.

14.0 Sign Standards

14.1. **Signage Plan.** A separate signage plan should be included with the site plan showing the locations of all signs (stop, speed limit, street blades, no-parking, etc.). Signs should be indicated as standard or decorative.

14.2. **Standard Signs**. In all subdivisions that include public streets, except as provided below, standard street signs should be installed by the City of Concord. The developer must reimburse the City for the full cost of the installation. Costs associated with signs requiring reinstallation due to damage or removal prior to City acceptance of the streets are the responsibility of the developer. The performance of installation, maintenance, and replacement of signs on public streets after the streets have been accepted by the City are the responsibility of the City.

14.3. **Decorative Sign Treatments**. [Encroachment process.] In subdivisions with architectural standards, restrictive covenants, and a property owner's association, decorative sign treatments may be installed by the developer with all costs of installation, maintenance, and replacement paid by the developer. Sign panels themselves shall be procured from the City of Concord for installation on the custom sign treatments. An encroachment agreement for the custom sign treatments must be completed prior to the approval of a site plan containing decorative signage.

a. Specifications.

Decorative sign treatments must comply with the Manual on Uniform Traffic Control Devices (MUTCD) published by the U.S. Department of Transportation and City of Concord standards. Submission requirements for consideration of decorative sign treatments shall include detailed color drawings, plans and specifications of the proposed street signs, signage plan showing locations, and a written statement describing funding for installation, maintenance, and replacement.

b. Replacement.

1. Regulatory and Warning Signs. Replacement of lost or damaged regulatory or warning signs, as defined by the MUTCD, must be accomplished within mandated time periods by the City using standard street signs until the developer or property owner's association installs replacement decorative sign treatments. If the developer or property owner's association fails to install replacement decorative sign treatments for regulatory and warning signs within ninety (90) days, the replacement by the City shall be considered permanent and the full cost must be paid by the developer or property owner's association.

2. Guide Signs. Replacement of lost or damaged guide signs, as defined by the MUTCD, on decorative sign treatments must be accomplished by the developer or property owner's association within ninety (90) days or the City shall install standard street signs with full costs paid by the developer or property owner's association.

15.0 Public Street Acceptance

The City of Concord may consider the acceptance of streets/roads for maintenance upon written request. The City reserves the right to refuse acceptance of maintenance of streets which are not built to the standards outlined in the Technical Standards Manual or, upon inspection, are found to require redesign or repair work to bring the street(s) up to current standards. Alleys will not be accepted by the City for maintenance.

15.1 A street must meet the following minimum requirements to be considered for public maintenance:

a. Must be within City of Concord City limits,

b. Shall be contiguous to streets currently maintained by the City or NCDOT. Streets which do not directly connect to an existing public street maintained by the City or NCDOT will not be accepted.

c. Must meet current standards as outlined in the City of Concord Technical Standards.

d. Must be platted with at least minimum Right-of-Way (R/W) required for the designated classification.

e. The Owner(s)/Applicant(s) must not otherwise be in default of any other obligation to the City of Concord.

15.2 **Newly Constructed Streets Platted for City Maintenance**

To initiate the acceptance procedure for newly constructed streets platted for City maintenance, the following information shall be submitted to the City Engineer:

a. An Application for Street Maintenance Acceptance (Appendix A). The street(s) shall not have had the final surface lift of asphalt laid for more than 12 months.

b. One (1) PE Certification for Subdivisions and Streets (Appendix B), including applicable reports and inspection data.

c. One (1) Pavement Core Results Report. The report will include a cover letter, table of contents, project scope, data collection methodology, description of project limits, a map at a legible scale of the project limits containing street names, lengths, cross sections, and the location of the pavement core samples. The report will also include a core results table with street name, applicable City of Concord Technical Standards Manual Typical Section, core result material and thickness (in inches), and a statement of whether or not the core result meets the current minimum design standard per the applicable typical section. Pavement core samples shall be taken at 500’ intervals (minimum of 1 core per street block), and no more than 4.0’ from the centerline of the road. This report must be signed, dated, and stamped by a North Carolina registered professional engineer. The City may acquire its own pavement core samples as a quality control

d. Copies of all soils, compaction, concrete, and other applicable inspection data and records for all streets included in the acceptance request.

e. Upon receipt of the request, the City will perform an inspection of the subject street(s), and a review of all submitted materials. The City shall notify the owning entity of all

construction deficiencies required to be corrected. Upon satisfactory inspection and/or completion of corrective measures, re-inspection, and final approval by the City Engineer, the street acceptance request will be presented to City Council for approval.

f. All additional requirements of Section 5.7.8 thru 5.7.10 of the City of Concord Development Ordinance apply to street acceptance.

15.3 Existing Private Streets

To initiate the acceptance procedure for existing private streets for City maintenance the following information shall be submitted to the City Engineer by the Applicant(s):

a. Private Street Maintenance Acceptance Petition (Appendix C), representing a minimum of 75% of the linear frontage of property owners (one per parcel) within the request area in favor of the request.

b. One (1) map of the area with the subject streets identified.

c. Copies of plats for all parcels with frontage along the subject street.

d. Encroachment request information sheet for all non-city utilities.

e. Upon receipt of the petition, the City Engineer or their representative will perform an inspection of the subject street(s), and review all submitted materials. The City shall notify the Applicant(s) of all deficiencies required to be corrected, and the Right-of-Way (R/W) that will be required to be dedicated for the subject street(s).

f. Once the Applicant(s) receives notification of deficiencies and R/W requirements they should inform the City Engineer within one-hundred and twenty (120) days if they wish to continue the acceptance request.

g. If the Applicant(s) wish to continue the request they will be responsible for correcting any identified deficiencies using a licensed contractor where applicable and ensuring the street(s) and related infrastructure meet current standards as outlined in the Technical Standards Manual (TSM). Where necessary, designs for the required work shall be prepared by a licensed professional engineer.

h. If R/W is required for acceptance, the Applicant(s) will be responsible for having a Plat(s) prepared by a licensed professional land surveyor showing dedication of the required R/W. The Plat(s) should be accompanied by appropriate documentation from 100% of the landowners where the proposed R/W encroaches upon their property. The City of Concord will not provide compensation for any property dedicated as R/W as part of a voluntary request for acceptance of a private street for City maintenance.

i. Upon satisfactory inspection and/or completion of corrective measures, re-inspection, approval of R/W dedication Plat(s), and final approval by the City Engineer, the street acceptance request will be presented to City Council for approval.

15.4 Dedication of Public Streets on a Final Plat

a. When a *street* is dedicated in connection with a *subdivision*, the approval of a *final plat* shall not be deemed to constitute or effect the acceptance by the City of Concord of any *street* shown on the *final plat*. All streets proposed for public

dedication are subject to acceptance for maintenance in accordance with Section 15 of this Article.

15.5 **City Council Street Acceptance**

Street acceptance requests must be approved by City Council during a regular council meeting. It is the applicant's responsibility to ensure the City Engineer has all documentation necessary for the request to be placed on the Council Agenda. No requests for street acceptance will be considered during the June council meeting.

16.0 Unopened, Dedicated Street Standards

Streets for which right-of-way has been dedicated by subdivision plat or deed to the North Carolina Department of Transportation or the City of Concord and recorded with the Cabarrus County Register of Deeds, but have never been constructed or accepted for public maintenance, will not be constructed or maintained by the City until the following conditions have been met:

16.1. Rights-of-way sufficiently wide for the street and utilities, as determined by the Director of Engineering, have been dedicated and surveyed if necessary.

16.2. Right-of-way has been cleared and graded to meet City standards for slope and drainage.

16.3. Roadway shall be constructed or improved to the standards set forth in the Technical Standards Manual.

16.4. The Director of Engineering or their authorized representative has inspected all work.

16.5. The Director of Engineering or their authorized representative has issued a certificate of completion for the required improvements.

16.6. City Council has approved the acceptance of the street(s) for public maintenance and the warranty period has passed.

17.0 Cluster Mailbox Unit Standards

It is the responsibility of the Applicant to ensure that the appropriate method of mail delivery and locations are coordinated and approved with local USPS representatives for all proposed developments.

17.1 Site Plan Approval

A site plan will be required for review prior to approval of Cluster Mailbox Units (CBUs) associated with any subdivision or development application. If for any reason after approval of a site plan the location and other details pertaining to CBUs is altered, a revised site plan will be required to be submitted for review and compliance to all pertinent technical standards.

17.2 Arrangement

a. CBUs shall be located outside the public right-of-way and located in a centralized common area(s) of the development. Sufficient parking should be provided to serve the location(s).

b. CBUs or combinations with 16 or less mail receptacles may be located along a local residential street outside of the R/W, provided all the following are met:

1. Posted speed limit on street is 25 mph or less.
2. Sidewalk must be located on the same side of the street as the CBU.
3. Access to the mailbox by users must be from the non-street side of the CBU.
4. The structure is located so that no conflicts with utilities, above or underground, exist.
5. At least one dedicated accessible parking space, on or off-street, is provided.

c. CBUs or combinations of 32 or less mail receptacles may be located along a local or residential collector street provided all of the following are met:

1. Posted speed limit on the street is 35 mph or less.
2. Sidewalk must be located on the same side of street as the CBU.
3. Access to the mailbox by users must be from the non-street side of the CBU.
4. The structure(s) is located so that no conflicts with utilities, above or underground, exist.
5. A dedicated on or off street parking area is provided with an appropriate amount of parking spaces.

d. CBUs or combinations of 33 or more mail receptacles require a separate lot with street type driveway access containing an appropriate number of dedicated parking spots.

e. CBUs or combinations of any number for non-residential or multi-family developments and/or subdivisions require a separate lot with street type driveway access containing an appropriate number of dedicated parking spots.

17.3 Location

All cluster mailbox units and associated on-street parking must be erected:

a. No closer than 100 feet measured from the curb-line of intersecting streets.

b. Away from any location whereby reason of the position of, shape or color, it may interfere with or obstruct the view of, or be confused with any authorized traffic sign, signal or device.

c. So as not to obstruct sight distance along the roadway and at intersecting streets, driveways, greenways, or trail facilities.

d. No closer than 10 feet away from a residential driveway serving a detached, semi-attached, or townhome dwelling.

e. In common areas or near property lines rather than directly in front of a residence.

f. Outside of public or private utility easements, public or private storm drainage easements, and at least 10 feet away from water meters and cleanouts.

g. No closer than 500 feet, measured along the street, from another CBU.

17.4 Signs & Markings

In areas where parking is provided for CBUs, permissible parking signs shall be installed on both ends of the defined parking area and designated specifically for mail parking. Signs R7-21a, shall be used that state "MAIL PARKING, 15 MINUTE LIMIT." Reserved accessible spaces shall be clearly marked with an international accessibility symbol marked on the pavement and signs R7-8 and R7-8a installed. All pavement markings and signs shall be in accordance with the Manual on Uniform Traffic Control Devices (MUTCD).

17.5 Lighting

Suitable and sufficient lighting to illuminate the CBU and associated parking areas (where applicable) should be provided for all CBU locations.

17.6 Maintenance

a. The City does not have any responsibility for mail delivery; therefore, the city does not own or maintain CBUs.

b. The City will not be responsible for clearing snow and accumulations from the sidewalk, designated parking areas (if applicable), and pad around the CBU. In addition, the area around the CBUs is to be kept clean from trash and debris and clear from any obstacles that could impede mail delivery or retrieval.

c. These responsibilities must be provided by mailbox users or a legally responsible organization (i.e. homeowner's association, other legally recognized association, etc.) as acceptable to the Administrator. Documents to assure private responsibility of maintenance and repair by a homeowner's association or other legally recognized entity shall be approved as to form by the City Attorney.

17.7 Signs on CBUs

Signage affixed to CBUs located along streets is prohibited.

17.8 Construction of CBUs

Materials and specifications for the installation of CBUs and concrete pads are to be in accordance with USPS requirements and their approved manufacturer list.

17.9 CBU Parking Requirements

a. CBUs, or combinations of CBUs, require designated parking spots per Table 17-1.

Table 17-1: CBU Parking Requirements

CBU Parking Requirements		
Number of Mail Receptacles	Accessible Spaces*	Regular Parking Spaces
0-16	1	-
17-48	1	1
49-64	1	2
65-80	1	3
81-96	1	4
97-112	1	5
>112	**	**

*Where only 1 accessible space is provided, it must be van accessible.

**Requirements to be determined on a case by case basis.

18.0 References

The following are publications, documents, models, etc. that were used as guidance or direct reference for developing this Article. They are provided for citation and further review by the user of the contents of this article. Later editions and/or revisions of these references may be created in the future and shall be considered part of the standards in this manual where applicable.

North Carolina department of Transportation Standard Specifications for Roads and Structures, January 2018.

North Carolina Department of Transportation, Roadway Standards Drawings, 2018.

City of Concord Technical Standards Manual, Article 1, Stormwater.

American Association of State Highway and Transportation Officials, A Policy on Geometric Design of Highways and Streets, 7th edition.

North Carolina Department of Transportation, Roadway Design Manual, 2021.

North Carolina Department of Environment and Natural Resources, Erosion and Sediment Control Planning and Design Manual, 2013.

NCDENR, Storm Water Best Management Practices, 2020.

Federal Highway Administration, Manual on Uniform Traffic Control Devices (MUTCD), 2009.

City of Concord
Technical Standards Manual

Article II
Streets and Pedestrian Paths
Appendix A

Application for New Street Maintenance Acceptance

Concord
NORTH CAROLINA
High Performance Living

Application for Street Maintenance Acceptance

I hereby certify, as the owner, that to the best of my knowledge the improvements in the _____ subdivision have been constructed in accordance with approved plans and are shown on a record map filed in the Cabarrus County Register of Deeds office. Said map is recorded as Book # _____ Page(s)_____. All work conforms to the construction standards of the City of Concord development ordinance and technical standards.

I, therefore, request that the City of Concord consider the following streets in the _____ subdivision for maintenance acceptance. I understand that acceptance of said streets shall be made only by the City of Concord City Council in accordance with the City's street acceptance standards.

Subdivision: _____ Phase / Map: _____

Street	To	From	Length

Attach additional sheets as needed

The Final Surface Lift of asphalt was installed on: _____
Date

PE Certification (Appendix B), Pavement Core Results Report, and applicable materials testing, and inspection data are attached.

_____ _____ _____
Signature **Print Name** **Date**

_____ _____
Phone Number

_____
Address

Received by City of Concord: _____
(initials)

Date: _____

City of Concord
Technical Standards Manual

Article II
Streets and Pedestrian Paths
Appendix B

PE Certification for Subdivisions and Streets

Concord
NORTH CAROLINA
High Performance Living

PE Certification for Subdivisions and Streets

Subdivision: _____ Phase / Map: _____

_____

Street(s): _____ Length: _____
_____ Length: _____
_____ Length: _____
_____ Length: _____
_____ Length: _____
_____ Length: _____
_____ Length: _____
_____ Length: _____

A final inspection of the streets, and complete storm drainage system for the above referenced subdivision has been performed by _____. I have reviewed the inspection data and have determined that all public infrastructure has been constructed in accordance with the design drawings approved by Cabarrus County and the City of Concord on _____ and all subsequent revisions. My observations and testing indicate the subgrade, base, and pavement have been constructed in accordance with the guidelines established by the City of Concord, as verified by the attached test results.

_____	_____	_____
Signature	**Print Name**	**Date**

_____
NC PE #

_____
Seal

Received by City of Concord: _____
(initials)

Date: _____

PE Certification for Subdivisions and Streets – Checklist

TYPICAL SECTION

_____ - Roadway has been constructed in the center of the right of way.
_____ - Normal crown and/or superelevation have been properly established.
_____ - Curb & gutter and/or ditches have been constructed properly with no standing water.
_____ - Backfill of all curb & gutter / sidewalk properly placed and compacted.
_____ - All slopes have been properly graded.
_____ - Street Trees have been installed in accordance with approved plan.

ROADWAY CONSTRUCTION

_____ - Subgrade density tested at minimum of every 200 LF, minimum of 3 tests per street, and 2 tests in each cul-de-sac. First 8" of subgrade compacted to at least 100% of that obtained by compacting a sample of the material in accordance with AASHTO T 99 as modified by NCDOT indicated for each test as shown in attached soil compaction reports.
_____ - Subgrade has been proof rolled over the entire section. (pass/fail data & remarks included)
_____ - Stone depth verified at 1 location per station (data included). Minimum design depth must be achieved over the entire roadway section.
_____ - Stone density tested at minimum of every 200 LF, minimum of 3 tests per street, and 2 tests in each cul-de-sac. Stone base compacted to at least 100% of maximum density obtainable with the Modified Proctor Test (AASHTO-T180) indicated for each test as shown in attached stone compaction reports.
_____ - Stone base has been proof rolled over the entire section. (Pass/fail data & remarks included)
_____ - Prime Coat applied when/where needed.
_____ - Asphalt course(s) was inspected for failures and appropriate repairs made prior to placement of each successive course.
_____ - Tack Coats were applied between each layer of asphalt.

PAVEMENT PLACEMENT

_____ - Asphalt placement temperatures & mix designs verified.
_____ - Each asphalt course was tested for density at a minimum of 90% of the maximum specific gravity per attached results reports.
_____ - Pavement Core Results Report (attached) indicates the core results meet the current minimum design standards per the City of Concord Technical Standards. Core samples shall be taken at 500' intervals (minimum of 1 core per street block), and no more than 4.0' feet from the centerline of the street.

DRAINAGE

_____ - All materials are approved for use. (NCDOT stamp, etc.)
_____ - All grates/frames/hoods are free of damage and of domestic origin.
_____ - Masonry drainage structures have been properly constructed – steps installed, inverts poured, pipes cut and grouted, backfill compacted, and free of debris.
_____ - All pipe inlets, outlets, and channels are properly stabilized and free of erosion.
_____ - Pipes have been installed with proper cover and slope.
_____ - Pipe sizes are correct. (per plans)

TRAFFIC CONTROL

_____ - All traffic control signs are installed in locations per approved plans and are free of damage.
_____ - All signs comply with MUTCD requirements.
_____ - Encroachment agreement has been approved for all signs with decorative treatments.

_____
Signature

_____
NC PE #

_____ _____
Print Name Seal

City of Concord
Technical Standards Manual

Article II
Streets and Pedestrian Paths
Appendix C

Private Street Maintenance Acceptance Petition

Concord
NORTH CAROLINA
High Performance Living

Private Street Maintenance Acceptance Petition

I _____, being a property owner along the identified street segment(s), agree to be the main contact to the City in regards to this Petition.

There are a total of _____ properties along the street segment(s) listed on the Private Street Maintenance Acceptance Form. There are _____ valid signatures on the petition form, which represent _____ % of the properties along the identified street segment(s).

I certify, to the best of my knowledge, the signatures on the petition form are those of the property owners of record, that they are valid, and that only one signature per property has been considered in the above percentage.

Number of petition sheets attached: _____

_____

Print Name

_____

_____

Address

_____

Phone Number

_____

Email Address

_____ Date: _____

Signature of Applicant

Private Street Maintenance Acceptance Petition

We the undersigned, petition the City of Concord to accept the below identified street segment(s) for City maintenance.

STREET FROM TO

_____

_____

Support from 75% of the property owners (one per property) along each street segment is required for the street acceptance request to move forward in the approval process.

By signing below I certify that I support the request for the above street segment(s) to be accepted into the City's public street network, and that I have read and understand Section 15, Article II of the City's Technical Standards Manual in regards to Public Street Acceptance.		
PROPERTY OWNER PRINTED NAME & SIGNATURE	**ADDRESS**	**TELEPHONE #**

This sheet may be duplicated as needed.

City of Concord
Technical Standards Manual

Article III
Driveways & Street Connections

Concord
NORTH CAROLINA
High Performance Living

TABLE OF CONTENTS
Article III

TABLES AND FIGURES

TABLES

FIGURES

APPENDICIES

1.0 Purpose

The safety and efficiency of streets are impacted by the amount and type of interference experienced by the vehicles traveling on it. The purpose of this Article is to minimize interference with traffic flow and accidents and promote the best overall utilization of the street by controlling vehicles entering, leaving, and crossing the street at intersections and driveways. The City recognizes the right of abutting property owners to access their property from the street; however, the rights of other users of the street to travel with relative safety and freedom from interference must also be considered.

The requirements contained within this article will serve as the rules and regulations to permit connections to public streets per Article IV, Section 50-121 of the City Code of Ordinances and have been established:

1.1. To provide maximum safety and protection to the public through the regulation of vehicles entering and exiting public streets, and

1.2. To provide uniform standards for the design, location, operation, and construction of driveways and street connections throughout the City, and

1.3. To provide owners of abutting property with the maximum service feasible, consistent with the safe and efficient use of City streets.

2.0 Applicability

2.1. This article includes the standards for all access points and driveways planned to connect to a publicly maintained street within the corporate limits and extraterritorial jurisdiction of the City of Concord. Standard details are provided in the Concord Manual of Standard Details to be used in conjunction with this article. In the event of a conflict between the standard details and the provisions in this Article, the stricter standards will apply. These provisions apply to that portion of the private driveway from the point where it connects to the edge of the public right-of-way.

2.2. Standards for private driveways on private property are included in Article 10 of the Development Ordinance.

2.3. Existing driveway approaches or street connections may not be relocated, altered, or reconstructed without a permit approving the relocation, alteration, or reconstruction; such driveway approaches are subject to the provisions of this article.

2.4. Where proposed accesses connect to an existing public or private neighborhood/development street network with no more than two (2) non-gated entrances/outlets, the proposed development may be considered an expansion of the existing neighborhood/development and the existing entrances may be considered direct access entrances serving the proposed development and may be subject to current standards as they would apply to the proposed development. See figure 2.4-1 for an example.

Figure 2.4-1: Existing Development Expansion Example

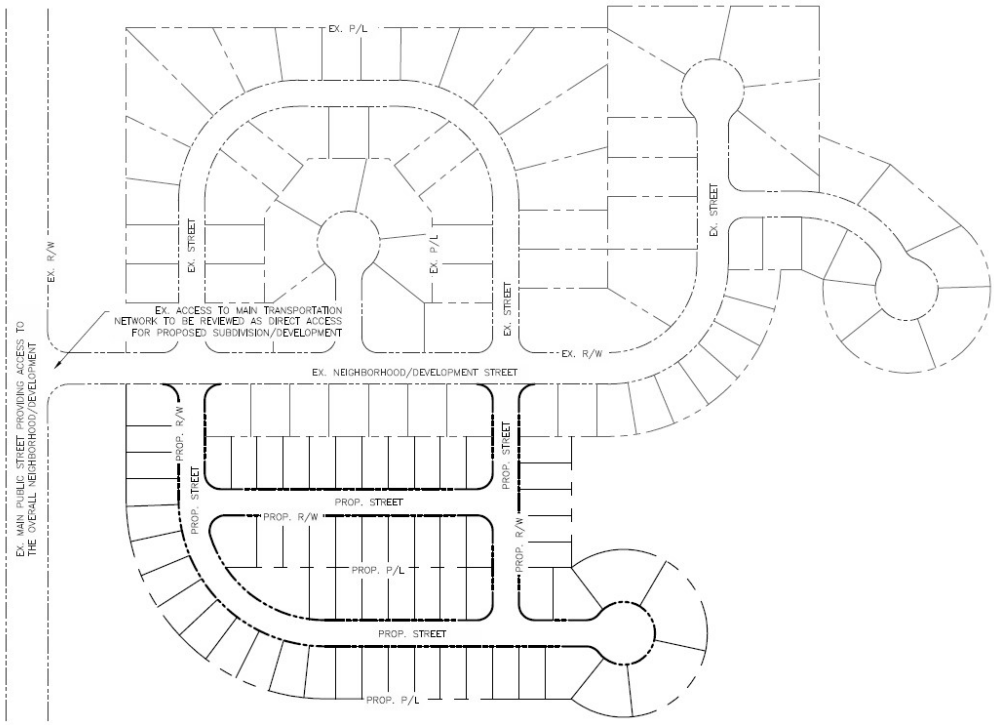

3.0 Driveway Permits

3.1. A driveway permit must be received prior to the creation of any access point subject to this article.

3.2. A new driveway permit will be required for non-residential change of use development plans if they meet any of the following criteria:

a. Current driveway is in disrepair and/or does not meet City minimum design standards.

b. When a change of use results in an additional 20 daily trips per day above the existing use.

c. In cases where the existing driveway does not meet ADA accessibility requirements.

d. When there are significant changes to the on-site parking layout and circulation pattern.

e. Where NCDOT stipulates a new/revised driveway permit is required.

3.3. If not completed as part of a previous application process, an approved Traffic Impact Analysis (TIA) and subsequent Transportation Mitigation Agreement (TMA) is required prior to the approval of Driveway Permits for all proposed non-residential and mixed-use developments, all multi-family and single-family attached residential developments, and all other residential developments with 6 or more total dwelling units. Refer to the Technical Standards Manual (TSM), Article VIII, Traffic Impact Analysis, for TIA requirements.

3.4. The application process and requirements for issuance of this permit are provided in Article 6.

3.5. The North Carolina Department of Transportation (NCDOT) is required to review all connections to state system streets, unless exempt from state review requirements. The Applicant is responsible for ensuring all NCDOT Driveway Permit materials are submitted to NCDOT as applicable. The City will not accept nor handle money associated with any NCDOT fees.

3.6. All connections to City maintained streets which will potentially add traffic or otherwise impact an

existing City to State system connection will be reviewed by NCDOT to determine the potential for, and extent of improvements to State facilities to ensure the overall transportation infrastructure is adequate to serve proposed developments.

3.7. When determined that improvements are needed on NCDOT maintained streets and a NCDOT driveway permit is not required for the proposed access(s), an encroachment agreement between the Applicant and the NCDOT will be required for any work to be done within NCDOT right-of-way in accordance with NCDOT guidelines.

3.8. State system streets are those streets within the city for which the state retains the ultimate responsibility. The more restrictive driveway standards (NCDOT or City of Concord) apply.

3.9. Driveway permits on state system streets, within the municipal limits of Concord, must also be submitted to the City for review.

3.10. When a NCDOT Driveway Permit or Encroachment Agreement is required, concurrent review is allowed however, the City cannot approve a development Site Plan until such time as final approval of the NCDOT Driveway Permit or Encroachment Agreement application and plans approved by NCDOT are provided.

3.11. The maximum number of driveways allowed for any parcel prior to the subdivision of property is three.

3.12. Approval of a City Driveway Permit is contingent on the determination by the City and/or NCDOT that the overall existing transportation infrastructure, or planned improvements, is adequate to serve proposed accesses.

4.0 Driveway Approach Standards

4.1. **Widths**.

a. All driveway approach widths are measured at the street right-of-way line and the width of any driveway shall not increase within the right-of-way except at properly designated radii and curb returns.

b. The width from the edge of pavement perpendicularly to the edge of pavement must be greater than the minimum widths and smaller than the maximum widths provided in Table 4-1.

Table 4-1: Minimum and Maximum Access Widths

Driveway Types	Driveway Width (feet)		Flare/Radius (feet)	
	Minimum	Maximum	Minimum	Maximum
Residential Single Family (Detached)	12	20	1	3
Residential Single Family (Attached)	10	20	1	3
Residential Multi-Family	24	36	5	10
Commercial/Industrial Two-Way	24	36	10	30
Commercial/Industrial One-Way	15	20	10	30
Private Street Entrance	24	48	10*	30*
Street Type Driveway	24	36	10*	30*

*Radius only.

c. Ramp type driveway approaches may use either a standard drop curb opening or curb radius from the street curb to the inside sidewalk line. If a curb radius is used, the top elevation of the curb radius must be held level with the elevation of the street curb, and the driveway approach must be raised to meet the elevation of the curb line at the inside sidewalk line.

4.2. **Location**.

a. The driveway approach must be installed to the right-of-way line, at least ten feet from the edge of the street and/or back-of-curb, or at least 5' from the edge of sidewalk furthest from the edge of the street. The greatest distance will apply.

b. No portion of a driveway may be located within a sight triangle.

c. Driveways accessing Major or Minor Thoroughfares, Boulevards, or Major Collectors must provide on-site turnaround to prevent backing into the street from the driveway.

4.3. **Materials**.

a. Types.

1. *Portland Cement Concrete*. All driveway approaches must be Portland cement concrete (3600 psi min.) apron sections ("ramp" type), unless specifically listed in the asphaltic concrete section.

2. *Asphaltic Concrete*. Asphalt paving is not allowed on any driveway apron connecting to a public street with granite curbing or concrete curb and gutter. Asphalt may be allowed if the pavement design is approved by the Director of Transportation and only for the following situations:

(a) Street type driveway entrances, which may be required for public or private developments that have parking spaces for two hundred (200) or more vehicles;

(b) Driveways connecting to unpaved public streets;

(c) Driveways connecting to stone surface public streets; or

(d) Driveways connecting to public streets constructed of asphalt ribbon pavement.

5.0 Driveway Separation

5.1. **Minimum Driveway Separation**. Driveways must be spaced as outlined in Table 5-1. Driveways cannot be located within sight triangles. For corner lots, driveways should be located as far as possible from the intersection.

5.2. **Stem Lengths**. The stem length shall be measured from the parallel edge of right-of-way of the intersecting street to the first point of conflict, such as parking areas or intersections. Where no right-of-way is dedicated along a private street, the stem length shall be measured from the closest edge of the intersecting street. Stem lengths for non-residential and multi-family driveways shall be established by raised curb and gutter or other acceptable physical barrier to prevent vehicles from entering and exiting the driveway within the required length. Minimum stem lengths are listed in Table 5-2.

a. ***Residential Stem Lengths.*** Minimum stem lengths for single-family residential developments will be required along all proposed/existing entrances to the proposed development from intersecting streets.

b. ***Non-Residential Stem Lengths***. Minimum stem lengths for non-residential and multi-family uses will be required along all streets.

c. ***Gated Driveways.*** In order to ensure that no part of any vehicle using a driveway remains in or overhangs the R/W, sidewalk, or street while waiting on the gate to operate, proposed gates for all detached and attached residential driveways shall be located a minimum of 24 feet from the R/W, and proposed gates for all non-residential and multi-family driveways shall be located a

minimum distance per the stem lengths shown in Table 5-2, or further if design vehicle is longer than the minimum stem length.

Table 5-1: Minimum Driveway Separations

Functional Classification	Separation between Driveways[1]	Separation between Driveway and Street[2]
Major Thoroughfare	400 feet	250 feet
Minor Thoroughfare	400 feet	250 feet
Major Collector	120 feet	120 feet
Minor Collector		
Non-Residential & Multi-Family	50 feet	60 feet
Single-Family Detached	30 feet	30 feet
Local Street		
Non-Residential & Multi-Family	50 feet	60 feet
Single-Family Detached	30 feet	30 feet

[1] Distance is measured from closest edge to closest edge.

[2] Distance is measured from closest edge of the driveway to the closest parallel edge of the street right-of-way. Minimum separation between driveways and streets should be equal to the number shown in the table, the minimum distance required to ensure no portion of a driveway falls within a sight triangle, or the minimum stem length required along entrances to proposed developments. The greatest distance will apply.

Table 5-2: Minimum Stem Lengths

Functional Classification	Minimum Stem Length (feet)
Major Thoroughfare	125 feet
Minor Thoroughfare	100 feet
Major Collector	75 feet
Minor Collector	
Non-Residential & Multi-Family	70 feet
Single-Family Residential	60 feet
Local Street (Inc. Alleys)	50 feet

5.3. **Side Clearance.** All driveway approaches must have a minimum side clearance from property line as specified in Table 5-3. Additional side clearance may be needed to accommodate required turn lanes, deceleration lanes and/or tapers.

Table 5-3: Minimum Side Clearance

Land Use	Minimum Side Clearance
Single-Family Residential Uses	5 feet
All Other Uses	10 feet

5.4. **Shared Access Points.** Landowners of adjacent property, may, by written mutual agreement, construct a joint driveway to service both properties provided that all other requirements of this article are met apart from the side clearance restriction along the property line where the access is located. Minimum separation of shared accesses shall follow Table 5-1 with the exception that the minimum separation for shared access points for Single-Family Attached from adjacent driveways shall be 30 feet. A shared access is treated as a single driveway for the purposes of allowed widths. No portion of a shared access driveway may be counted towards parking requirements.

5.5. **Corner Clearance.** All driveway approaches must have a minimum clearance from the edge of parallel public rights-of-way (street intersections) to the nearest edge of the driveway approach as indicated by the minimum separations and/or stem lengths shown in Tables 5-1 and 5-2.

5.6. **Corner Lots**. Driveways associated with corner lots should be located on the street with the lower street functional classification.

6.0 Attached Single Family Dwelling Access Standards

6.1. For the purposes of this section, the following definitions will apply:

a. Structure – any single building consisting of a number of Single Family or Multi-Family Attached dwelling units.

b. Attached Multi-Family Dwelling – any single dwelling unit attached to one or more dwelling units within the same structure located on a single parcel.

c. Attached Single Family Dwelling – any single dwelling unit located on its own individual parcel and attached to one or more single family dwelling units within the same structure.

d. Townhome – a single family dwelling unit attached to other units creating a structure of 2 (two) or more units in a row.

e. Duplex – a structure consisting of no more than two (2) single family attached dwelling units. Duplexes proposed within a development also proposing townhome structures containing 3 or more single family dwellings will be treated as townhomes.

f. Primary Street – Any street other than an alley, public or private, providing direct or indirect access to the structure.

g. Alley – Private access connection providing an indirect link from each individual unit or structure's driveway, parking, and/or garage to the primary street. Intersections between private alleys and primary streets shall meet all requirements

of applicable CDO and TSM manuals.

h. Front Loaded – Structures whose driveway access to a primary street is a direct connection to a primary street, regardless of the location of the driveway, parking, and/or garage in relation to the frontage of the primary street.

i. Rear Loaded – Structures with indirect access to a primary street and served by a private alley providing an indirect link to primary street(s) from each unit or structure's driveway, parking, and/or garage.

6.2. Access(es) for Duplexes must meet all requirements pertaining to single family detached units.

6.3. Allowable access for Attached Single Family Dwellings will be based on the number of units per structure.

a. Front Loaded structures consisting of 1-4 single family attached dwelling units are permitted one (1) direct access to the primary street meeting all requirements pertaining to single family detached driveways.

b. Front Loaded structures consisting of 5 or more single family attached dwelling units are permitted no more than two (2) direct accesses to primary streets meeting all requirements pertaining to single family detached driveways.

c. Rear loaded structures shall be served by private alleys. The permitted number of private alley access points to primary streets will be determined on a case-by-case basis upon review of a proposed site plan. Individual unit and/or structure access to private alleys shall meet the requirements set forth in Section 10.3 of the Concord's CDO.

7.0 Median and Island Standards for Driveways

7.1. **Applicability**. Medians and islands may only be allowed in street-type driveways. Medians and islands are not permitted for ramp-type driveways.

7.2. **Location**. Raised medians and islands must be constructed on private property outside of the public right-of-way, unless required as an approved access management device.

7.3. **Size**.

1. The minimum width of the island (excluding the nose) as measured nearest the public right-of-way must be four (4) feet or six (6) feet for a planted median.

2. The minimum length must be fifty (50) feet.

3. For street type driveways with a median or island, the combined width of pavement of the separated driveway segments shall not exceed forty-eight (48) feet.

4. High volume street-type driveways with medians will be reviewed and approved on a case-by-case basis.

5. Minimum travel width on either side of medians and islands is 14'.

8.0 Alignment and Grades

8.1. **Sidewalk Crossings.** Driveway approaches must cross the sidewalk area at the existing or proposed sidewalk grade. The sidewalk must be constructed separately from the driveway apron. Sidewalk shall be a minimum of 6" thick at driveway crossings.

8.2. **Angle.** The driveway angle (the angle between the driveway centerline and the curb line) must be ninety (90) degrees, unless engineering considerations dictate otherwise and approved by the Director of Transportation.

8.3. **Directional Restrictions.**

a. Where special pedestrian or vehicular hazards may be encountered, driveway approaches may be restricted to one-way operation.

b. Such driveways shall be clearly signed and marked as one-way driveways using pavement arrows and directional signs.

c. Failure to erect and maintain such signs or the failure to use these driveways in accordance with the signing and marking shall be considered a violation of this article.

8.4. **Near Traffic and Utility Structures**.

a. No driveway approach shall be permitted to encompass any municipal facility, including but not limited to:

1. Traffic signal elements,

2. Catch basins,

3. Fire hydrants,

4. Crosswalks,

5. Curb ramps,

6. Loading zones,

7. Utility poles,

8. Fire alarm supports,

9. Meter boxes, and/or

10. Sewer cleanouts.

b. The driveway approach must be located a minimum of 3 feet from any such facilities.

9.0 Turn Lanes

9.1. Dedication and construction of turn lanes may be needed to serve one or more entrances into a development. Turn lanes must be provided for conditional uses, special uses, driveway permits, or subdivision approvals for developments proposing direct or indirect (i.e. adding accesses to existing dead end or limited access neighborhood/development street networks) access to two-lane public streets with average daily traffic (ADT) exceeding four thousand (4000) vehicles per day, or four-lane or larger public streets with ADT exceeding eight thousand (8,000) vehicles per day, if any one of the following conditions are also present:

a. Fifty (50) or more off-street parking spaces are required;

b. More than (100) trips during the peak hours of 7:00 a.m. and 9:00 a.m., 11:00 a.m. and 1:00 p.m., and 4:00 p.m. and 6:00 p.m. are generated. Data shall be based on the latest editions of

the Institute of Transportation Engineers Manual titled "Trip Generation" and based upon the highest land use permitted by the zoning classification considering any restrictions imposed by any conditional use permit, special use permit, or other legally enforceable restriction;

c. More than twenty-five (25) truck (more than 13,000 G.V.W.) trips per day through a single driveway are expected;

d. Special safety or traffic conditions exist due to limited sight distance and/or posted speeds in excess of thirty-five (35) miles per hour along the adjacent public street; or

e. At least fifty (50) residential dwelling units are served by the access point.

9.2. In addition to the criteria listed above, Tables C-1 and C-2 in Appendix C, Article VIII of the TSM, offer further guidance to warrant the installation of dedicated left or right turn lanes on streets throughout Concord.

9.3. NCDOT publishes a chart (pg. 80) in the NCDOT Policy on Street and Driveway Access that indicates warrants and recommends storage lengths for left and right turn lanes based on the number of turns versus the opposing volume of traffic. This chart should be used as a basis for determining the storage length required for turn lanes into a site and as additional guidance for when turn lanes are warranted. The chart is included in Appendix C, Article VIII of the TSM. The typical minimum length is 100' for tapers, and 100' for storage. Storage and taper lengths less than 100' will be reviewed on a case-by-case basis.

9.4. Turn lanes should be designed per NCDOT recommendations. Two charts (pages 78 and 79) outlining NCDOT recommended treatments for turn lanes, included in the NCDOT Driveway Permit Manual, are provided in Appendix C, Article VIII of the TSM for general reference.

Note: Dual right- or left-turn lanes should be considered when the turning volume exceeds 300 vehicles per hour.

9.5. Where turn lanes are determined to be needed based on the above criteria, they will be considered necessary improvements for the transportation infrastructure to be considered adequate to serve developments safely and efficiently.

10.0 One-Way Access Point Standards

10.1. **Signage**.

a. *Location*.

1. At a minimum, one double-faced sign must be located on private property at least ten feet from the back of the curb to the right of each driveway approach.

2. Additional signs may be placed on the opposite side of the approach.

3. The sign should not be blocked from view by vegetation or other obstacles.

b. *Size*.

1. The area of the sign cannot be less than three square feet or more than six square feet.

2. Business logos may be used but shall not exceed one-third of the sign area.

c. *Content*. Only the words "Enter" and "Exit" or "In" and "Out" with the appropriate arrow shall be used.

d. *Lettering Standards.*

1. Uppercase letters must be at least six inches tall; however, eight-inch letters are preferred;

2. Lowercase letters must be at least four inches tall; however, six-inch letters are preferred;
3. The first letter of each word must be uppercase; and
4. Letters must be black or white on a reflectorized or illuminated background of contrasting color.

e. *Arrow Standards.*

1. Arrow dimensions must be at least six inches long with a shaft width of at least two inches.
2. The head of the arrow must be at least twice as wide as the shaft.
3. Arrows must be comprised of thermoplastic material.

f. *Pavement Arrows.*

1. *Location*. A sufficient number of pavement arrows designating the appropriate direction of traffic must be installed in the driveway approach and driveway so that they are clearly visible to oncoming traffic.
2. *Size*. Pavement arrows must be a minimum of eight feet in length and shall conform in size and proportion to the standards set forth in the Manual on Uniform Traffic Control Devices.

11.0 Roadside Drainage

A well-functioning roadside drainage system is important to maintaining the structural integrity of the street and providing a safe driving surface during storm events.

11.1. **Drainage System**. Roadside drainage is accomplished using ditches, driveway pipes, curb and gutter, or some combination of both systems.

11.2. **Modifications** to existing drainage systems must be evaluated and approved by the City prior to construction and are reviewed and permitted as a part of the site plan or subdivision construction plan approval process.

11.3. **Piping Existing Ditches**

a. The design and cost for piping existing roadside ditches is the responsibility of the property owner unless it is included as part of a neighborhood capital improvement project funded by the City of Concord.

b. Piping ditches will only be allowed if the following criteria are achieved:

1. The hydraulic capacity of the existing ditch system will not be reduced or diminished.
2. The culvert pipe shall be of size adequate to carry the anticipated flow in the ditch as determined by the City of Concord and shall not be smaller than 15-inches inside diameter.
3. The flow from and to adjacent properties will not be inhibited.
4. All pipe materials and installation meet City of Concord and NCDOT standards. No pipe with broken joints or other defects is allowed.
5. A swale must be maintained over the pipe to prohibit sheet flow of water from the property onto the road surface, and adequate inlet grates are included in the design and installation. In no case shall the construction cause water to flow across the pavement, or to pond on the shoulders or in the ditch or result in erosion within the right-of-way.
6. A minimum cover of 8-inches must be maintained over the top of the pipe. If vehicular traffic will cross the pipe, a minimum cover of 24-inches must be maintained, or Class IV

reinforced concrete pipe must be utilized.

7. Pipe installation must be inspected by the City prior to backfilling the pipe and inlet boxes.

8. All grates and frames shall meet NCDOT standards for traffic bearing and must be pre-approved by the City of Concord.

9. Drainage collected by ditches, gutters, or pipes on private property shall not be discharged into the road drainage system unless expressly approved by the City of Concord. The applicant may be required to submit a drainage study to the City justifying the drainage system proposed and the pipe or sewer sizes to be used. Natural drainage laws and practices must be observed.

11.4. **Pipe Construction Options**

a. All non-residential or industrial sites are responsible for the design, construction and cost associated with all drainage improvements in accordance with these regulations.

b. All residents have two options for construction of the ditch pipe, once a permit has been issued:

1. The City will contract with a licensed contractor following payment of all estimated costs associated with the project to the City by the owner. The project will then be completed based upon the Contractor's schedule.

2. The resident will hire a licensed contractor who will complete the project according to the submitted plans. The contractor will be responsible to schedule inspection by the City prior to placing any backfill into the excavation, so that all pipe joints, bedding, and inlet construction can be inspected.

c. Failure to obtain the proper permit and/or inspection may result in the pipe being removed at the owner's expense.

11.5. **Acceptable Piping Materials**

a. All pipe located within the street right-of-way must be reinforced concrete pipe or other acceptable material approved on a case-by-case basis.

11.6. **Acceptable Grates and Frames**

a. All grates and frames must be cast iron and must meet City of Concord and NCDOT standards.

b. Each casting shall be permanently imprinted with the image of a fish and the following statement: "Dump No Waste! Drains to Streams."

c. Roll-over grates are not acceptable within driveways.

12.0 Inspections

12.1. Once the permit is duly issued, the supervisor on the driveway construction site shall keep the permit available for on-the-job inspection by authorized personnel of the city.

12.2. The applicant shall request an inspection by a city inspector 24 hours in advance of any concrete pouring. The Director of Transportation or his authorized representative shall have the authority to require the immediate stoppage of work not performed under the requirements of this article.

12.3. In the event of failure to comply with the provisions of this article or the terms of the permit or in the case of faulty workmanship or materials, the permit may be revoked and the property owner will be required to remove or correct the non-complying driveway at the property owner's expense.

13.0 Street and Utility Repairs

13.1. Operations requiring the cutting and removal of roadway and sidewalk surfaces, or operations interfering with the normal flow of vehicular or pedestrian traffic shall be subject to the guidelines set forth in Part VI of the Manual of Uniform Traffic Control Devices.

13.2. Prior to cutting of the street, sidewalk or curb and gutter, a street cut permit is required to be obtained from the Director of Transportation or their designee. No street cut permits will be issued for streets that have been resurfaced within the last two years unless there is an emergency situation or other physical constraints and approved by the Director of Transportation.

13.3. Cost of replacing the asphalt, concrete or other materials and other related costs such as street cleaning, sidewalk cleaning, etc. as a result of the above described work will be paid by the permit holder.

13.4. A copy of the permit must be kept at the job location.

13.5. Street cuts and sidewalks should be completely repaired in an expedient manner.

a. Cuts must be filled with stable material (asphalt, concrete or approved equal) to within 1 ½ inches of finished grade within 3 days of initial work.

b. Finished roadway surfaces, sidewalks and curbs must be restored within 30 days of initial work.

13.6. If circumstances justify, the Director of Transportation may grant an extension of these time requirements.

14.0 Use and Protection of Property

14.1. **Rights-of-Way.**

a. Rights-of-way of streets may not be used for private or commercial purposes without an approved encroachment agreement.

b. The area to which the driveway provides access shall be sufficiently large to store any vehicles using the driveway completely off the right-of-way and must be of sufficient size to allow the necessary function to be carried out completely on private property. This includes vehicle queues from drive-through and curb side services.

14.2. **Raised Curbing.**

a. Except for driveway approaches to single family residences, a six (6) inch raised curb shall be constructed a minimum distance of three (3) feet behind the street right-of-way line in the vicinity of:

1. street corners,

2. sidewalk safety zones,

3. entrance driveways and other points.

b. Construction of curbing should be completed in such a manner as to:

1. prevent vehicles from crossing sidewalks other than by means of a driveway as herein prescribed,

2. prevent vehicular overhang on the right-of-way, and

3. provide for proper drainage and control of water on private property.

14.3. **Parking areas and loading areas**.

a. Parking and loading areas shall be constructed, marked, signed, and properly curbed so that all movements to park and un-park, and load and unload will take place within property lines.

b. In the central business area, the Director of Transportation is hereby granted the authority to waive requirements set forth in this subsection after all engineering investigation and provided the following conditions are present:

1. The area is within the parking exempt area of the city;

2. The waiver requested arises from peculiar physical conditions not ordinarily existing in other areas of the city;

3. Due to the nature or operation of the business on the applicant's property the requirements of the above causes unnecessary hardship;

4. The waiver requested is not against the public interest, safety, convenience, and general welfare; and

5. The granting of the waiver will not adversely affect the rights of adjacent property owners.

14.4. Except as may be provided for under the Concord City Code, Part II, Chapter 50, Streets, Sidewalks, and Other Public Places, no part of the right-of-way or the area between the curb or edge of pavement and the property line shall be used to place private signs, fences, wall post lights, or any other item. All such items shall be placed on private property in such a manner as not to interfere with vehicular or pedestrian traffic or visibility.

15.0 Protecting the public from injury

15.1. Whenever any person or firm shall do or undertake any of the items set forth in this article it shall be the duty of such person(s) to protect from harm and damage all persons or vehicles which may be using any street, sidewalk, right-of-way or other public area where such work is in progress.

15.2. All persons or firms shall erect and maintain suitable barricades, signs, lights, flares and other appropriate warning devices at the proper locations where such work is in progress in accordance with the current policy and regulations for street construction and maintenance operations within the City of Concord, as established by the Director of Transportation and in accordance with the Manual on Uniform Traffic Control Devices.

15.3. Permits for driveway construction can only be issued to persons who are properly licensed and bonded to work within the street or highway right-of-way.

15.4. The City's intent is to further increase safety and decrease congestion along specified major thoroughfares. In order to accomplish these objectives, certain goals have been identified. These goals are:

a. To prohibit driveways within a certain distance of intersecting streets unless alternate access is not available,

b. To decrease the number of driveways along major thoroughfares, and

c. To increase the distance between adjacent driveways along major thoroughfares.

16.0 Parking and Loading

Parking and Loading shall be designed and provided in accordance with this article as well as the guidelines in Article 10 of the City of Concord development ordinance.

16.1. Parking Aisle and Space Dimensions

Minimum dimensions of parking spaces and maneuvering areas shall be as set forth below.

a. Accessible parking spaces shall be a minimum of 13 feet by 18 feet for a single non-van space (8 feet in width in addition to a 5 foot access aisle); a minimum of 16 feet by 18 feet for a single van space (8 feet in width in addition to an 8 foot access aisle, or 11 feet in width in addition to a 5 foot access aisle); or 24 feet by 18 feet for a double van space, or a non-van and van double space (8 feet in width for each space with an eight foot access aisle between spaces). Accessible parking spaces shall comply with the N.C. Accessibility Code.

b. Compact Car Spaces are only permitted in parking facilities providing 100 spaces or more. Not more that 20% of the off-street parking spaces required shall be designed as compact car parking spaces. Each compact car parking space shall be a minimum of eight (8) feet wide and sixteen (16) feet long. Compact car parking spaces shall be clearly marked or posted for "Compact Cars Only." All other provisions of this Article relating to off-street parking requirements shall be met.

Table 15-1: Parking Area Dimensional Standards

STANDARD SIZE SPACES						
A	B	C	D	E	F	G
45°	9.0'	18.0'	12.0' ONE-WAY	8.0'	51.0'	2.0'/4.0'
60°	9.0'	18.0'	18.0' ONE-WAY	8.0'	58.0'	2.0'/4.0'
90°	9.0'	18.0'	24.0' TWO-WAY	8.0'	60.0'	2.0'/4.0'
COMPACT SPACES						
A	B	C	D	E	F	G
45°	8.0'	16.0'	N/A	8.0'	N/A	1.5'/3.0'
60°	8.0'	16.0'	N/A	8.0'	N/A	1.5'/3.0'
90°	8.0'	16.0'	N/A	8.0'	N/A	1.5'/3.0'

16.2. Overhang Protection

Wheel or bumper guards or curbing shall be provided, located, and arranged so that no part of any parked vehicle will extend beyond the boundaries of the parking space and into a pedestrian crossing area.

Except where a wall is constructed, a minimum of six-inch-high vertical concrete curb (or individual bumper guard) shall be constructed or installed so that no part of a vehicle extends beyond the property line.

16.3. Striping Required

Off-street parking areas, as required by this Ordinance, shall be striped in accordance with the dimensions as set forth in Standard DRV-121, and shall be 4" white paint.

CITY OF CONCORD
STREET AND DRIVEWAY ACCESS PERMIT

STAFF USE ONLY:

Permit Number _____

Street File _____

Approval Date _____

Location of Driveway(s):

Property Street Address

Driveway #1: Exact Distance N S E W

From the Intersection of and heading toward

Driveway #2: Exact Distance N S E W

From the Intersection of and heading toward

Driveway #3: Exact Distance N S E W

From the Intersection of and heading toward

Property Use: Commercial Industrial Residential/ Subdivision Other

Current Property Zoning:

Overlay District (if applicable):

Type of Existing Street Infrastructure: Curb & Gutter Shoulder Section Existing Surface: Concrete Asphalt

Access Agreement

I, the undersigned property owner and/or agent, request access and permission to construct driveway(s) or street(s) on public right-of-way at the above location.

I agree to construct and maintain driveway(s) or street entrance(s) in absolute conformance with the City of Concord "Standard for Access to Public Streets" as adopted by the City of Concord City Council.

I agree that no sign or objects will be places on or over the public right-of-way.

I agree that the driveway(s) or street(s) will be constructed as shown on the sketch on (the reverse side) (the attached plans).

I agree that the driveway(s) or street(s) as used in this agreement include any approach tapers, storage lanes or speed change lanes as deemed necessary.

I agree that in any future improvements to the roadway become necessary, the portion of driveway(s) or street(s) located on public right-of-way will be considered the property of the City of Concord, and will not be entitled to reimbursement or have any claim for present expenditures for driveway or street construction.

I agree that this permit becomes void if construction of driveway(s) or street(s) is not constructed within the time specified by the City of Concord "Standard for Access to Public Streets".

If a commercial access permit is applied for. I agree to pay a $50 inspection fee. Make Check payable to the City of Concord. The inspection fee will be reimbursed if application is denied.

I agree to construct and maintain the driveway(s) or street(s) in a safe manner so as to not interfere with or endanger the public travel.

I agree I am responsible for all utility locations, signing, and maintaining the work area from vehicular or pedestrian hazards until the work is repaired and complete by either the grantee or by the City of Concord. The appropriate signage and barricades shall be used according to the latest version of the Manual on Uniform Traffic Control Devices (MUTCD) and Amendments or Supplements thereto. Information as to the above rules and regulations may be obtained from the City of Concord Department of Transportation.

The owner and/or agents, upon submission of this application, hereby indemnifies and holds harmless the City of Concord, its officers and agents from any and all liability resulting from all work performed pursuant to this permit by the owner or contractor on the public right-of-way.

I agree the costs of making any improvements or other related costs such as sidewalk replacement, curb repair / replacement, sidewalk and street cleaning, etc., as a result of the above-described work will be paid by the grantee.

I agree that the City of Concord will assume no responsibility for any damages that may be caused to such facility, within the highway right-of-way, in carrying out its construction.

I AGREE TO NOTIFY THE CITY OF CONCORD ENGINEERING DEPARTMENT PRIOR TO WORK BEGINNING AND UPON COMPLETION.

THIS PERMIT SHALL BE CONSIDERED OFFICIAL AND MUST BE KEPT AT THE WORK LOCATION AND BE AVAILABE FOR INSPECTION BY CITY OFFICIALS.

IF APPROVED, THIS PERMIT WILL BE GRANTED TO THE PROPERTY OWNER. ANY CHANGE IN PROPERTY OWNERSHIP WILL REQUIRE A NEW OR REVISED DRIVEWAY ACCESS PERMIT. RESULTS MAY INCLUDE CHANGES TO OR CLOSURES OF EXISTING DRIVEWAYS.

	Driveway Width	Radius/Flare	Pipe Size*	Pipe Length*	Pipe Type*
1					
2					
3					
Applicant to contact City of Concord Environmental Services to determine driveway pipe size, material, etc. at (704) 920-5372. (if necessary).					

Property Owner

Name:_____

Signature: _____

Address:_____

_____ Phone #:_____

Witness

Name:_____

Signature: _____

Address:_____

_____ Phone #:_____

Applicant (if different than owner)

Name:_____

Signature: _____

Address:_____

_____ Phone #:_____

Witness

Name:_____

Signature: _____

Address:_____

_____ Phone #:_____

Approvals By City

Approved By:

Transportation

Signature	Title	Date

Engineering

Signature	Title	Date

Processed By:

Signature	Title	Date

Comments:

Sketch Plan (If no plans are attached, use this sheet. If plans are attached, please only include sheets that show driveway(s) and/or street(s)

Please attach Proposed Plans or sketch driveway(s) or streets(s) below.

Drawing must show:

- Location of driveways; both proposed and all adjacent existing driveways
- Details of Work, including pipes
- Existing buildings, walls, etc.
- Proposed building, walls, etc.
- Roadway features (including %grades and required roadway improvements if applicable)

Indicate North

City of Concord
Technical Standards Manual

Article IV: Waste Water Collection System

This article is being drafted, and has not yet been adopted by City Council. Please call the Engineering Department for questions pertaining to Waste Water Collection System at 704-920-5401.

City of Concord
Technical Standards Manual

Article V: Water Resources

This article is being drafted, and has not yet been adopted by City Council. Please call the Engineering Department for questions pertaining to Water Resources at 704-920-5401.

City of Concord
Technical Standards Manual

Article VI
Electric System

Electric Construction and Metering Specifications

Concord
NORTH CAROLINA
High Performance Living

TABLE OF CONTENTS

Article VI

LIST OF TABLES

LIST OF FIGURES

TABLE OF CONTENTS

Page No.

1.0 Introduction

The City of Concord Electric Systems Department has constructed, operated, and maintained an electric transmission and distribution system for over 100 years. During this time, tremendous technological changes have occurred and a need to standardize has been realized. It is the City's intention to provide its citizens and customers with safe and reliable electric power at a competitive price.

This Manual provides both an overview and detailed specifications for the operation of the electric system and for customer connections to the system. This Manual is not meant to be all-inclusive, but it does specify allowable connections and address mandatory specifications for equipment connected to the City's electric system.

If a user does not understand or has a question concerning this Manual, they should contact the Director of Electric Systems at (704) 920-5301.

2.0 Customer Delivery Point

2.1. **Location**. It is the customer's responsibility to provide a location for the electric service connection (delivery point). Transformer noise levels should be taken into consideration. On occasion, the customer may want to utilize a delivery point that is not consistent the City's least-cost approach. The City may provide the delivery point at the location requested by the customer, if the customer pays for the extra expense.

2.2. **Easement and Access**. The City must be granted an easement of its selection and the right of continuous access to its facilities for the purpose of installation, maintenance, and meter reading. The City will need space for the installation of wiring, poles, guys, anchors, transformers, fences, and any other apparatus used in furnishing electricity to the customer. If the only space available for metering equipment is inside the customer's structure, the appropriate indoor space must be dedicated. If equipment is located inside a building, the customer must bear the expense of constructing the space to meet electrical, fire, explosion, and ventilation code requirements. Sometimes the customer will have to construct special floors, hallways, and elevators to accommodate the moving of electrical equipment.

2.3. **Security**. The City has the right to secure and lock the space dedicated to the City and its facilities to prevent access and interference by any unauthorized parties, including the customer, the customer's employees, or the general public. The customer may be asked to provide an appropriate security fence enclosure for the equipment.

2.4. **Single Delivery Point**. Electric service will normally be supplied to a single delivery point for each customer. A single delivery point may also be used to supply a customer with separate structures or facilities, if the City, at its discretion, deems a single delivery point safe and otherwise appropriate.

2.5. **Multiple Delivery Points**. The customer and the City must work together to decide which facilities each delivery point will supply.

2.6. **Assignment of Responsibility.**

a. *Metering Equipment*. The City will provide, own, and maintain the meter, meter base, and other metering facilities. The customer will usually be asked to install the meter base since this is often the point of connection to the customer's wiring. Also, the customer must provide a suitable location for the meter. The City may ask the customer to provide a one–inch conduit from a transformer pad to the meter location.

b. *Transformers*. The City will provide any instrument transformer enclosures. The customer will provide any necessary weatherproof troughs for wiring connections and be responsible for providing the connectors and making the connections in a trough. The City may meter the primary side of the delivery point transformer when metering the secondary side is not feasible. The City will provide, install, own, and maintain all primary metering. When the delivery point for commercial and industrial customers is located on the customer's property and a pad mounted transformer is required, the customer will be responsible for providing a reinforced concrete transformer pad that has been approved by the City. The customer also will be responsible for providing all conduit turnouts to access the pad. When the transformer pad is the point of delivery, the customer will provide and install secondary conduit and conductors. The City will provide the connectors and make all connections.

2.7. **Overhead Installations**. The customer will be responsible for providing and securing a right-of-way for the least cost installation of the City's poles, down guys, and aerial conductors. The City will provide tree clearing of the right-of-way. The customer may be asked to clear any other obstacles in the right-of-way. If the customer requests City's facilities at a location other than the least–cost route, the customer will be asked to contribute to the cost of construction. In cases where an overhead service is required and/or mutually agreeable to provide residential service to a customer, the customer will provide the overhead riser, weatherhead, and conductor to meet all building codes and the National Electric Safety Code. The City will provide the meter enclosure and be responsible for making all overhead weatherhead connections and disconnections. See Figure 1.

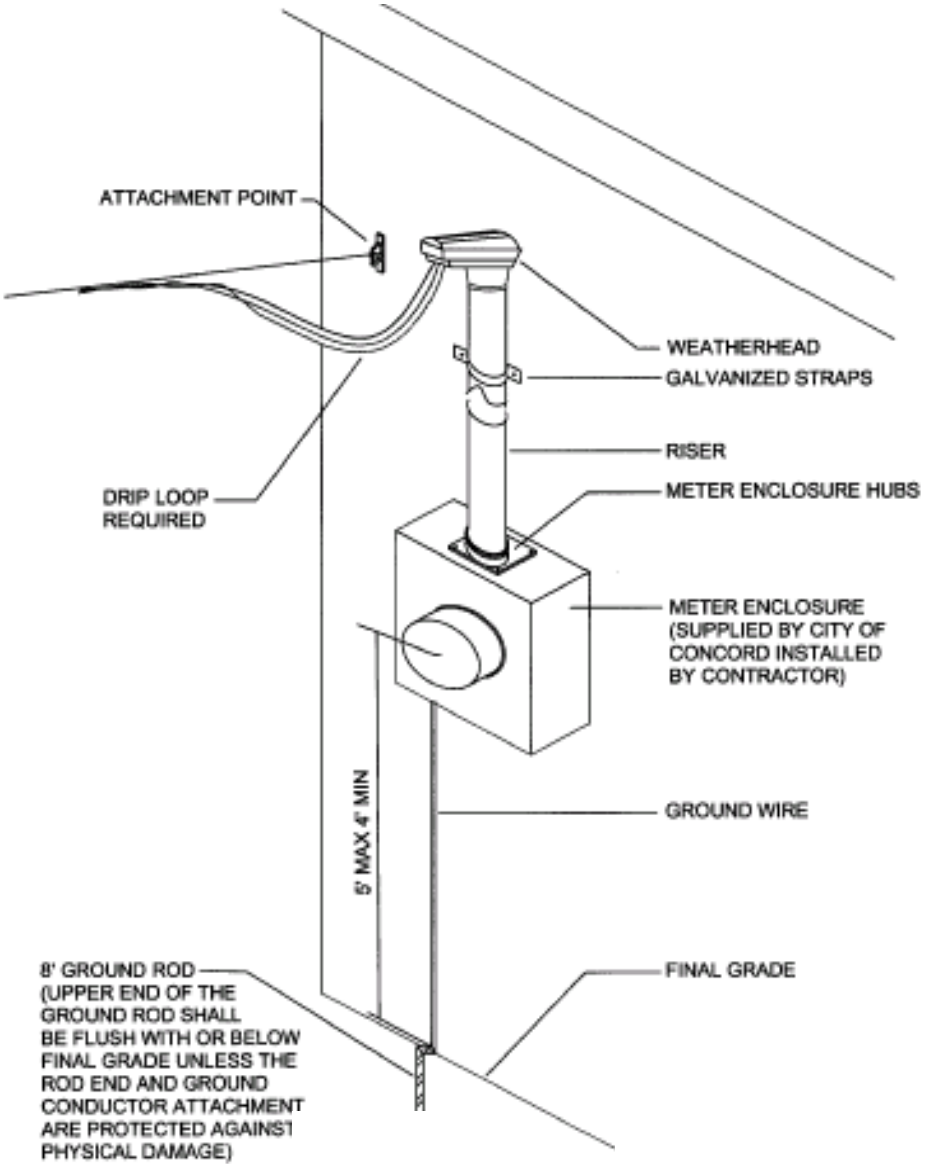

Figure 1: Overhead Service Diagram.

2.8. **Underground Installations**. The customer will be responsible for providing a cleared and finished grade within six inches of the planned final grade of the easement. The customer must provide the specific location of all property lines before construction can begin. The City may not be able to provide underground conductors where severe obstacles exist. Where the City encounters obstacles that necessitate construction beyond normal trenching (such as creeks, rock blasting, gullies, walls and other conflicting utilities), the customer will be asked to fund the extra expense. The City

may agree to share its trench with other utilities provided that the customer and other utilities make suitable arrangements to meet the City's construction schedule and safety requirements and agree to finish and tamp the trench to within 95 percent of original compaction. In cases where an underground service is required and/or mutually agreeable to provide residential service to a customer, the City will provide the meter enclosure and underground conduit riser to the meter base. See Figure 2.

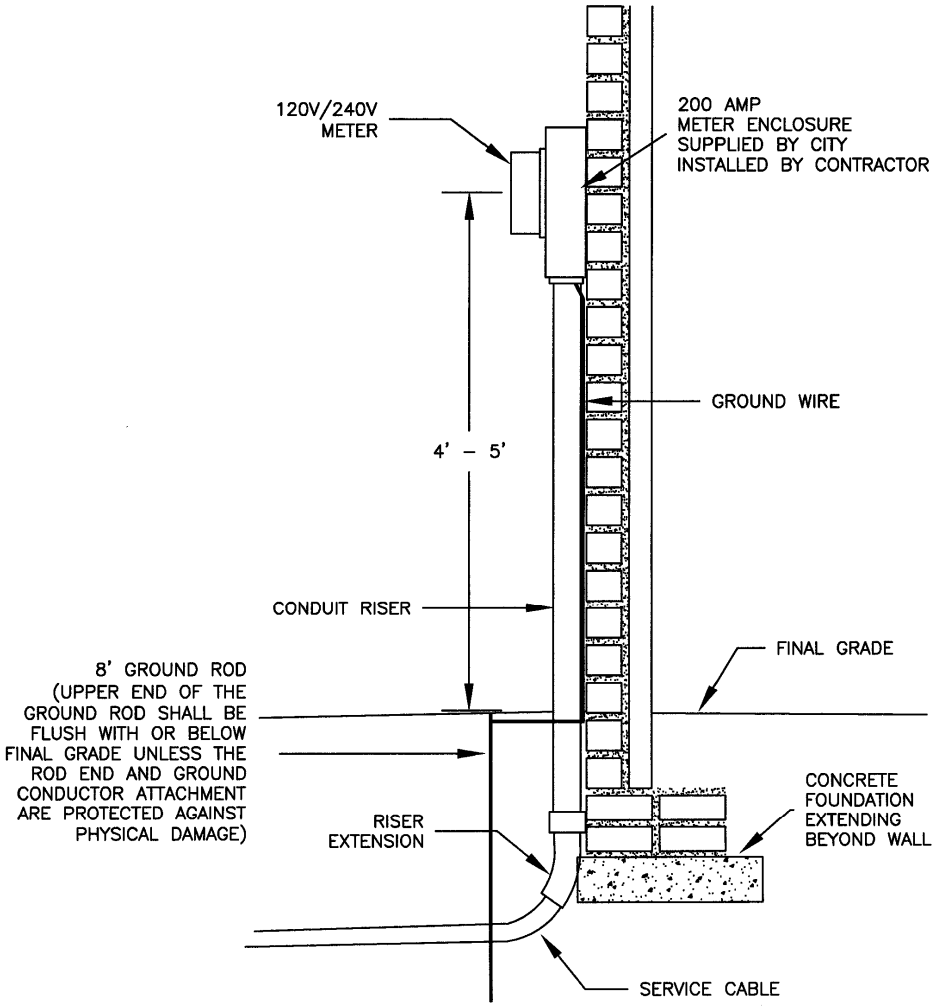

Figure 2: Underground Service Diagram.

2.9. **Load**. The customer must inform the City as to the type of voltage and level of service desired. The City will require information concerning total connected load, cycling loads, motor starting loads, and future loads. The City will inform the customer of any service limitations. Only certain voltage classes may be available and across–the–line starting of certain size motors may be limited. Restrictions on certain types of electrical loads may be necessary if the load produces spurious noise, ferroresonance, or other sinewave abnormalities on the electric system. The City will inform the customer of the maximum level of available fault current (short-circuit current) that the customer's equipment might experience. Likewise, the customer must inform the City of the installation of any fault current (short–circuit current) contribution from customer–owned motors and facilities.

2.10 **Applicable Regulations**. In establishing service connections, customers must assist the City in meeting both local building codes and the National Electrical Safety Code. Safe working clearances, personal safety clearances, and safe construction clearances are of special concern.

3.0 Electric Supply

3.1. **Frequency**. The City maintains a 60–hertz frequency electric system. Equipment that operates at frequencies other than 60-hertz will not function properly on the City's system.

3.2. **Equipment**. The voltage, number of phases, and type of meter that will be supplied depends upon the character, size, and location of the load to be served and upon the City's available facilities. Customers are encouraged to consult with the City's Electric Systems Department before purchasing equipment.

3.3. **Standard Voltage**. The City utilizes the American National Standard Utility Voltages C84.1-1982. Available standard secondary voltages include:

a. Single phase, 3-wire, 120/240 volts

b. Three-phase, 120/208 volts

c. Three-phase, 240 volts

d. Three-phase, 277/480 volts

3.4. **Nominal Voltage**. Reference North Carolina Utilities Commission Guidelines, Article 4, Rule R8-17 for nominal voltages that the City either utilizes or allows.

4.0 Three-Phase Service

4.1. **Requirements for the Provision of Three-Phase Service**. Three-phase service (at standard City voltages) may be provided if revenues from the proposed electric load are sufficient to justify the additional investment. Otherwise, the customer may be required to cover any anticipated unrecoverable costs (e.g., 20% of the total construction cost). Applicants for three–phase service may be required to execute a written contract before the service is extended.

4.2. **Phase Loss Protection**. When three–phase service is provided to any customer, the customer must be responsible for protecting their equipment from loss of phase (single-phasing) or phase imbalance.

5.0 Temporary Servicea

5.1. **Requirements for the Provision of Temporary Service**. Temporary service may be provided if the service is limited to a fixed time period and approved by the City.

5.2. **Temporary Service for Construction Sites**. Temporary single–phase service, 120/240 volts, may be provided to construction sites that establish a permanent service in accordance with the following:

a. The customer requesting temporary service must provide a suitable pole and approved meter loop installed at an agreed upon location. See Figures 3 and 4.

b. Temporary service must be located at a site convenient to existing facilities (i.e., equal to or less than 100 feet), or the cost to install and remove facilities may be charged to the customer.

c. The customer requesting temporary service must pay a temporary service fee.

d. Associated wiring and equipment must be inspected prior to connection.

a N.C. General Statute 160A-333

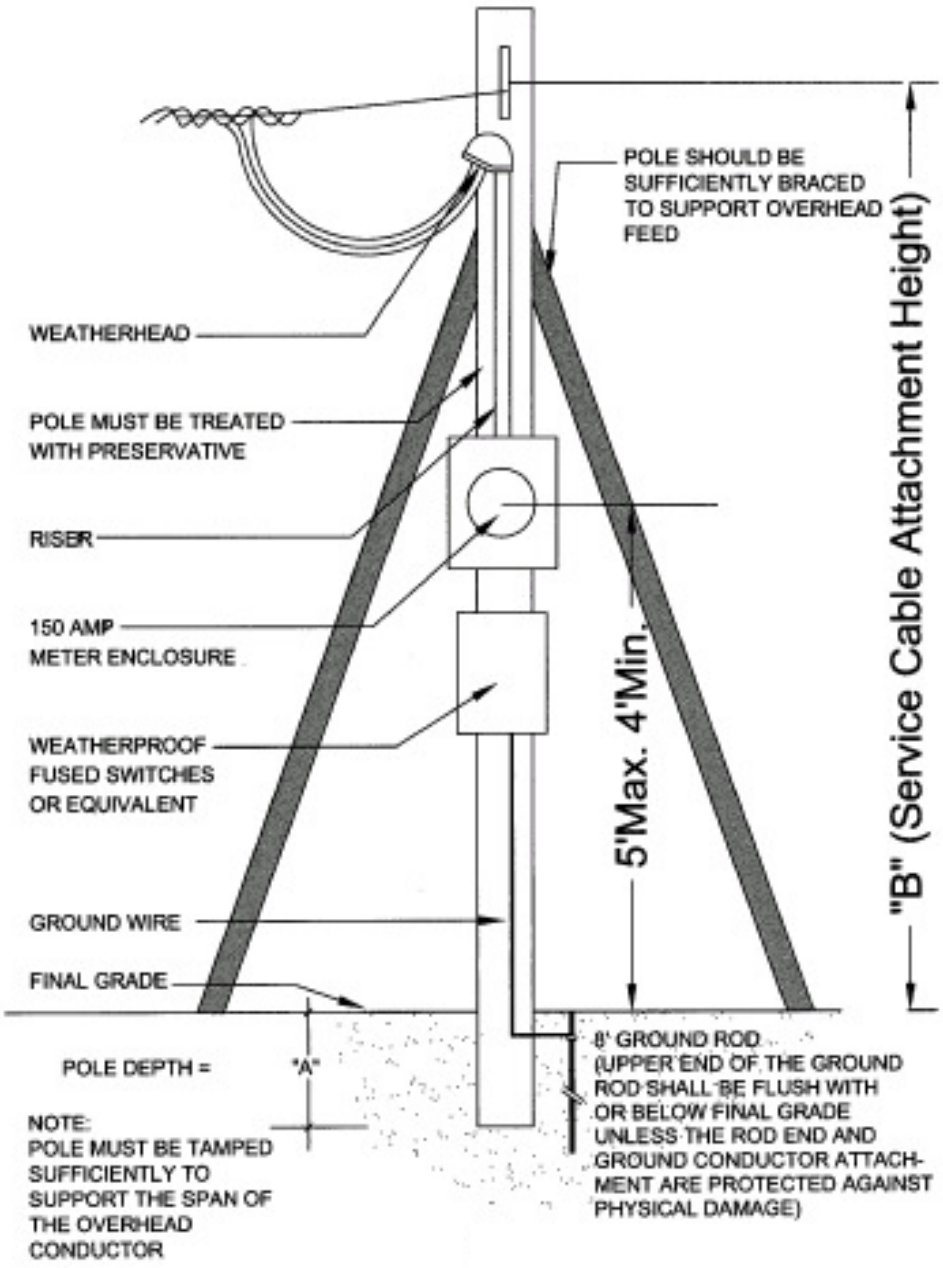

Figure 3: Temporary Overhead Service Diagram.

NOTES:
1. THESE DRAWINGS SHOW A TYPICAL INSTALLATION. ALL INSTALLATIONS SIMILAR OR DISSIMILAR TO THESE INSTALLATIONS MUST BE CHECKED FOR PROPER INSTALLATION BEFORE THE SERVICE CABLE IS INSTALLED.
2. THE DEPTH OF THE POLE SHALL BE VERIFIED.
3. THE POLE SHALL BE PROPERLY TAMPED.

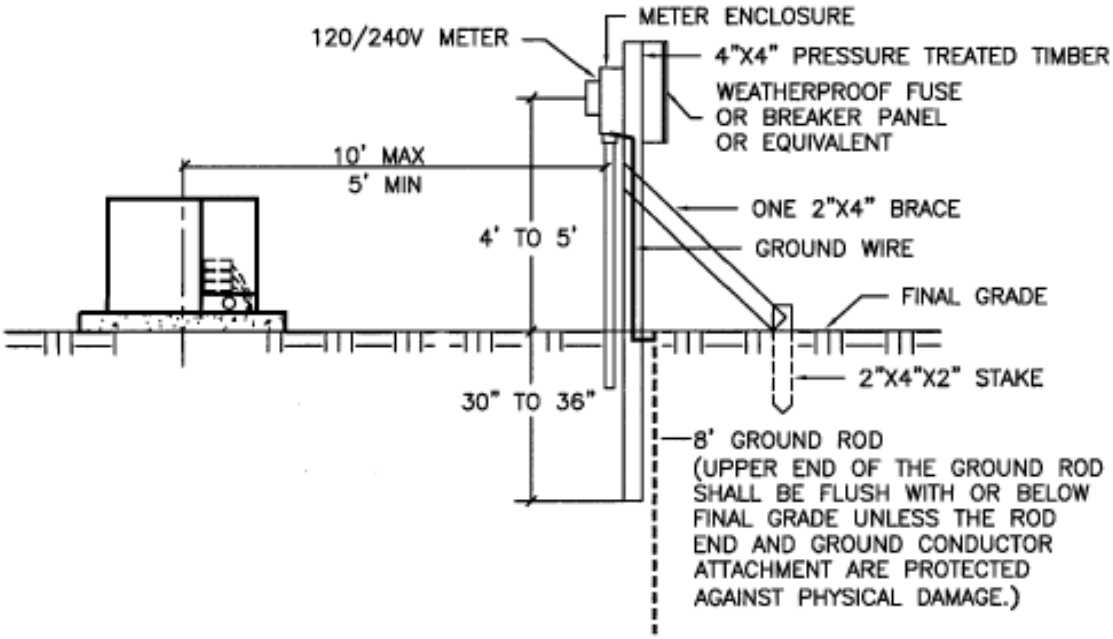

GENERAL
TEMPORARY SERVICE IS AVAILABLE ONLY WITHIN TEN FEET OF AN EXISTING UNDERGROUND TRANSFORMER OR SECONDARY PEDESTAL. TEMPORARY SEVICE SHOULD NOT BE INSTALLED IN THE PATH OF SERVICE BETWEEN TRANSFORMER AND HOUSE. IF TRANSFORMER OR SECONDARY PEDESTAL IS NOT AVAILABLE, REQUEST FOR SERVICE MUST BE COORDINATED WITH THE CITY OF CONCORD ELECTRIC SYSTEMS.

CUSTOMER FURNISHES:
1. THE 4" X 4" PRESSURE TREATED TIMBER, AND BRACE
2. WEATHERPROOF FUSE OR BREAKER BOX
3. GROUND ROD AND GROUND WIRE

CITY OF CONCORD FURNISHES AND INSTALLS:
1. 120/240 VOLT METER
2. TEMPORARY SERVICE CABLE
3. UNDERGROUND RISER CONDUIT
4. METER ENCLOSURE FURNISHED/CUSTOMER INSTALLS

Figure 4: Temporary Underground Service Diagram.

5.3. **Temporary Service for Special Events**. Temporary service may be provided if electric service is needed for a short duration or for transient customers (fairs, carnivals, special events) in accordance with the existing rate schedules of the City. Customers must pay in advance for the total estimated cost of installation and the removal of the service facilities, less the salvage value of the material used or the temporary construction cost, whichever is greater. An advance deposit of the full amount of the estimated bill for service may also be required.

5.4. **Temporary Service for Recreational or Seasonal Residential Development**. At the request of an owner or developer, overhead distribution primary lines may be installed provided that the customer pays for the construction costs.

5.5. **Other Temporary Services**. This classification includes barns, grain bins, water pumps, camp houses, individual seasonal residences, residences of a non–permanent nature and mobile homes, and other similar services that are considered to be of an incidental nature. Single–phase electric service facilities may be extended to establishments of this classification at any location within the service area of the City upon request by the owner or occupant. If the establishment is within 100 feet of an existing primary overhead line, the customer will not be required to contribute to the construction cost.

6.0 Minimum Wiring Requirements

Prior to connecting to the City's electric system, the customer must meet all federal, state, and local requirements for wiring including the National Electrical Safety Code and National Electric Code, in addition to any other relevant codes and safety standards.

7.0 Extra Facilities

7.1. **Extra Facilities Charge**. Any time a customer requests that the City provide facilities that are not normally included in the least-cost method of establishing electric service, the City may ask the customer to cover the cost of those additions with an extra facilities charge. The extra facilities charge will be billed upon completion of installation and must be paid upon receipt. Extra facilities can be, but are not limited to: more than one delivery point on a contiguous piece of property, more than one service voltage at a delivery point, extra transformer capacity for across-the-line starting of motors, backup or redundant delivery systems, extra metering features, special poles, switch devices, decorative fences, etc. Extra facilities charges may be added to a customer's monthly billing.

7.2. **Determination of Extra Facilities Charge Amount**. The amount of the extra facilities charge will equal the requested installation cost minus the standard installation cost. The installed cost of the extra facilities will be the cost of materials

used, including spare equipment, if any, plus applicable labor, transportation, stores, engineering, and general expense. Costs will be estimated if not known. If a customer has multiple delivery points, extra facilities charges will be calculated based upon the hypothetical cost to meet the customer's electrical needs at one delivery point and at one voltage versus the extra cost in meeting the customer's needs at multiple delivery points or multiple voltages.

7.3. **Right to Refuse Requests for Extra Facilities**. The City may refuse requests for extra facilities if, on its determination, the requested facilities are not feasible, or may adversely affect the City's cost or the reliability of the electric system.

8.0 Relocation of Facilities

The City may consider a customer's request to relocate the City's facilities. However, the customer may be asked to bear the expense of the relocation. For any relocation of overhead or underground facilities, the customer's expense will be determined by calculating the total installed cost of the new facility plus removal costs, less any salvage value.

9.0 Equipment Specifications

9.1. 9.1 **Location**. Customers must meet with a representative of the City to select a potential location for their meter. Electric meters must be located in an area that is accessible to City staff and equipment without the need to encroach on neighboring property. If the side of a structure or obstacles adjacent to the side of a structure are within five feet of the property line, the electric meter must be mounted within five feet of the front of the structure on the side closest to the electric transformer. Double wide and modular homes set up on the customers' property may have meter enclosure mounted on the side of the home.

9.2. **Ownership.** All electric transformers, meters, wires, and related appurtenances provided by the City and installed to serve the customer remains property of the City. The customer must maintain wiring and equipment owned by the customer or the City may refuse to connect service or discontinue service.

9.3. **Types of Service**. The types of electrical service provided by the City are identified in Table 1. Voltage, phase, and frequency vary across the City's electric system; therefore, equipment that is operational in one location may not be able to operate in another. Before wiring or purchasing specialized equipment, the customer should contact the City and verify the compatibility of the electric system in their location.

Table 1: Types of Service.

Current (amps)	Phase(s)	Wire Location	Meter Type
150	1	Overhead	Individual
200	1	Overhead	Individual
200	1	Underground	Individual
200	3	Overhead	Individual
200	3	Underground	Individual
400	1	Overhead or Underground	Individual
400	3	Overhead or Underground	Individual
200	1	Overhead or Underground	2 Gang
200	1	Overhead or Underground	3 Gang
200	1	Overhead or Underground	4 Gang
200	1	Overhead or Underground	5 Gang
200	1	Overhead or Underground	6 Gang
20			13 Terminal
20			8 Terminal
200		Underground	Mobile Home Pedestal

9.4. **Meter Types.**

a. *Services rated for 400 amps or less and less than 240 volts*. All electrical services rated for 400 amps or less must be metered with self-contained electric watt-hour meters, unless the Director of Electric Systems approves the use of instrument transformers.

b. *Services rated for over 400 amps or over 240 volts*. All electrical services rated in excess of 400 amps or voltages in excess of 240 volts must be metered using instrument transformers provided and installed by City.

9.5. **Enclosure Standards.**

a. *Types*. City-issued electric meter enclosures must be used for all electric meter enclosures for electric services up to 400 amps. Metering equipment for applications greater than 400 amps must be coordinated with the City. All meter sockets must be Underwriters Laboratories listed and labeled as such.

1. Individual Meters.

(a) *Single Phase*. Meter sockets must be manufactured by Durham or an equivalent manufacturer, rated for 320 amps of continuous current, capable of overhead or underground service line entry, ringless with four jaw-clamping terminals, and equipped with a Landis & Gyr or equivalent block assembly and a lever operated jaw release and bypass.

(b) *Three Phase*. Meter sockets must be manufactured by Durham or an equivalent manufacturer, rated for 320 amps of continuous current, capable of overhead or underground service line entry, ringless with seven jaw-clamping terminals, and equipped with a Landis & Gyr or equivalent block assembly and a lever operated jaw release and bypass.

2. *Gang Meters*. Gang meter requests must be submitted on a "special request multiple metering agreement" and approved by the City's Director of Electric Systems. Installations must include an appropriately-sized transformer, which will be owned and maintained by the City. The customer will be responsible for the ownership and maintenance of the conduit bank, main disconnect, and meter sockets.

(a) *Single Phase*. Meter sockets must be equipped with five jaw-clamping terminals, and a lever operated jaw release and bypass.

(b) *Three Phase*. Meter sockets must be equipped with seven jaw-clamping terminals and a lever operated jaw release and bypass and capable of accommodating watt-hour meters.

b. Studs.

1. *Line Side*. Line side studs must be located at the center of the enclosure and equipped with 350 thousand circular millimeter (MCM) single barrel lugs.

2. *Load Side*. Load side studs must be equipped with 350 MCM double barrel

lugs.

3. *Neutral*. Neutral studs must have double barrel lugs. An extra triplex grounding lug must be provided for a #6 copper wire.

c. *Labels*. All meter enclosures must be properly mounted and, when required, marked prior to the installation of service lines. The meter socket cover must be labeled with ¾-inch white letters on a red background. The label must be located in the center of the cover, two inches from the top. The letters "con" must be stamped or embossed in 1-inch letters on the lower right corner of the lid. Multiple gang (2-6 gang) meter enclosures and individual enclosures that are grouped together, must be identifiably marked with the address served by the meter, prior to the installation of the meters and electrical service line.

d. *Height*. The center of all meter enclosures must be four to five feet above final grade.

9.6. **Multiple Gang Metering**. All electrical services requiring specialized gang metering must be approved by the City of Concord Electric Systems Department. Such installations must consist of an appropriately sized transformer, which will be owned and maintained by City of Concord. The customer must own and maintain a conduit bank feeding a customer owned and maintained main disconnect that feeds appropriate customer owned and maintained meter sockets. Meter sockets must consist of 5 terminals and lever bypass for single-phase network (120/208 volt) metering and 7 terminals and lever bypass for three-phase metering to accommodate watt-hour meters. Watt-hour meters shall be owned and maintained by the City of Concord. See Figure 5.

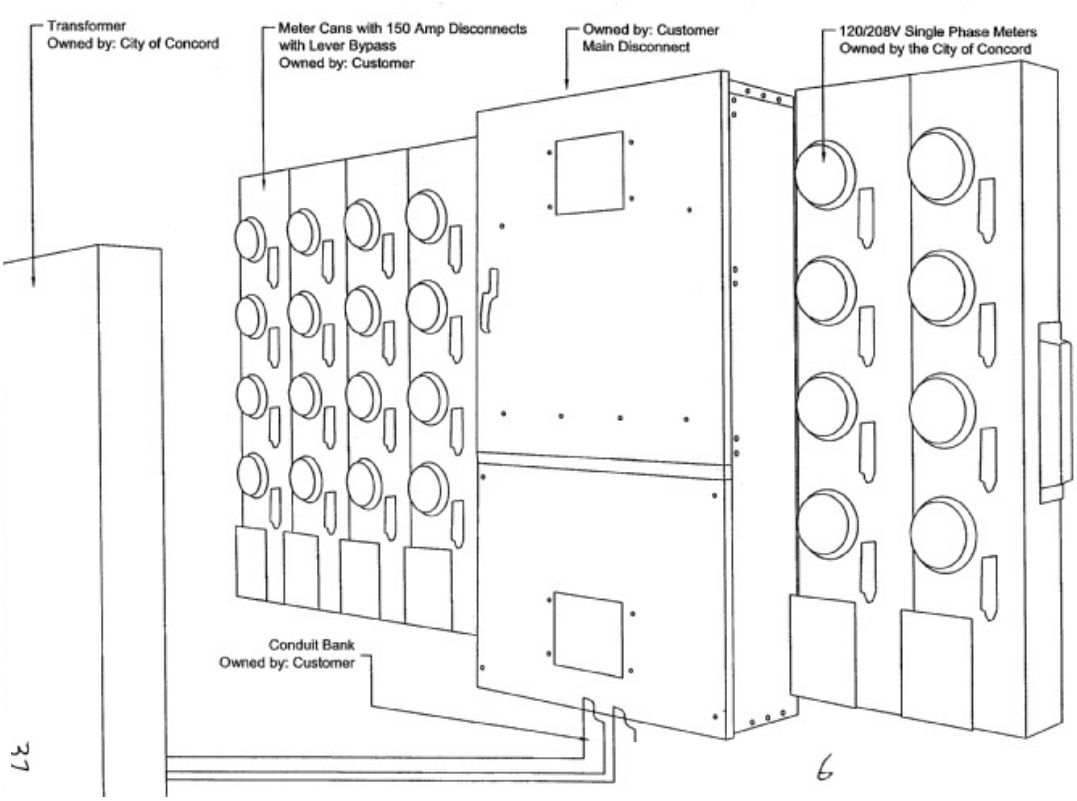

Figure 5: Gang Metering Diagram.

9.7. **Current Transformer (CT) Cabinets.**

a. *Size*. City-issued cabinets must be used for all required current transformer cabinets for electric services up to 400 amps.

1. For 120/240 volt services in excess of 200 amps, a 24-inch by 24-inch by 8-inch enclosure must be used.

2. For 120/208 volt services in excess of 200 amps, a 30-inch by 30-inch by 8-inch enclosure must be used.

3. For 277/480 volt services, a 36-inch by 36-inch by 12-inch enclosure must be used.

b. *Height*. The bottom of all current transformer cabinets must be 36 inches above final grade.

c. *Side Clearance*. No customer-owned equipment can be mounted within 16 inches of the current transformer cabinet, such as breaker panel, main disconnect, etc. Any equipment mounted within this area must be removed prior to the installation of the electric service line.

d. *Conduit Risers*. The City will install a main feeder conduit riser to the center of the bottom of the cabinet for underground feeds. The contractor must provide and

install an overhead main feeder conduit riser to the center top of cabinet.

e. *Bonding Lugs*. Bonding lugs must be provided by the contractor and placed inside the cabinet so as not to interfere with the 4-inch conduit riser mounted in the center of cabinet. See Figures 6 and 7.

f. *Length of Free Conductors*. The following lengths of free conductors must be provided in the cabinet for termination and makeup:

1. For 24-inch by 24-inch by 8-inch cabinets, 36 inches,

2. For 30-inch by 30-inch by 8-inch cabinets, 36 inches, and

3. For 36-inch by 36-inch by 12-inch cabinets, 48 inches.

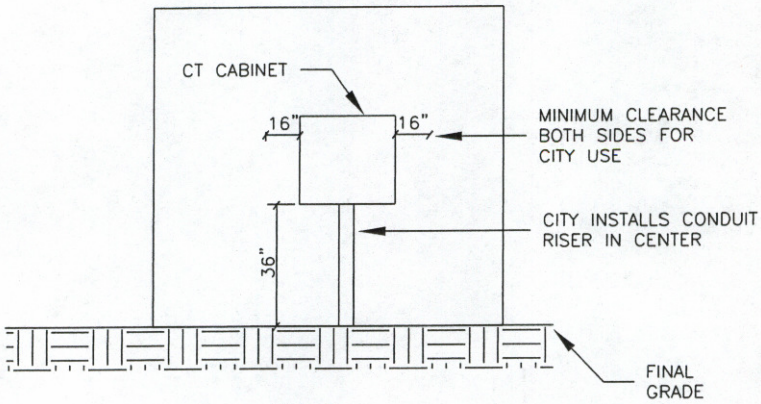

FIG 1

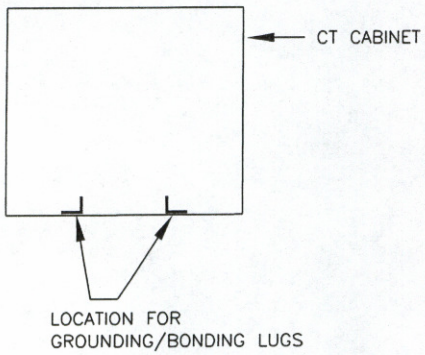

FIG 2

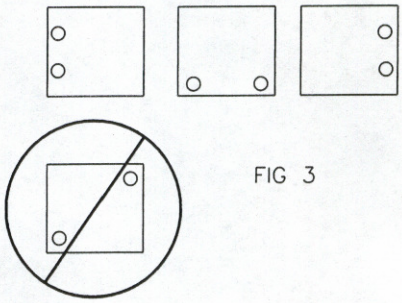

FIG 3

CT CAN SHALL BE MOUNTED 36" ABOVE FINAL GRADE MEASURED FROM BOTTOM OF CABINET. SEE FIG 1

NO EQUIPMENT SHOULD BE MOUNTED WITHIN 16" EITHER SIDE OF CT CAN. (SEE FIG 1)

BONDING LUGS SHOULD BE MOUNTED INSIDE BOTTOM SO AS NOT TO INTERFERE WITH 4" CONDUIT RISER MOUNTED IN THE CENTER OF CT CABINET. (SEE FIG 2 AND PAGE 37A)

CUSTOMER LOAD SIDE CONDUCTORS SHOULD ENTER AS PICTURED IN FIG 3

ALL NEC REQUIRED BONDING WILL BE COMPLETED BY CONTRACTOR BEFORE SERVICE WILL BE ENERGIZED. SEE DRAWING PAGE 37A.

IF ANY UNUSUAL CIRCUMSTANCES EXIST PLEASE CONTACT ELECTRIC SYSTEMS CITY OF CONCORD (704)920-5316 OR (704)920-5317

Figure 6: Current Transformer Cabinet Installation Diagram.

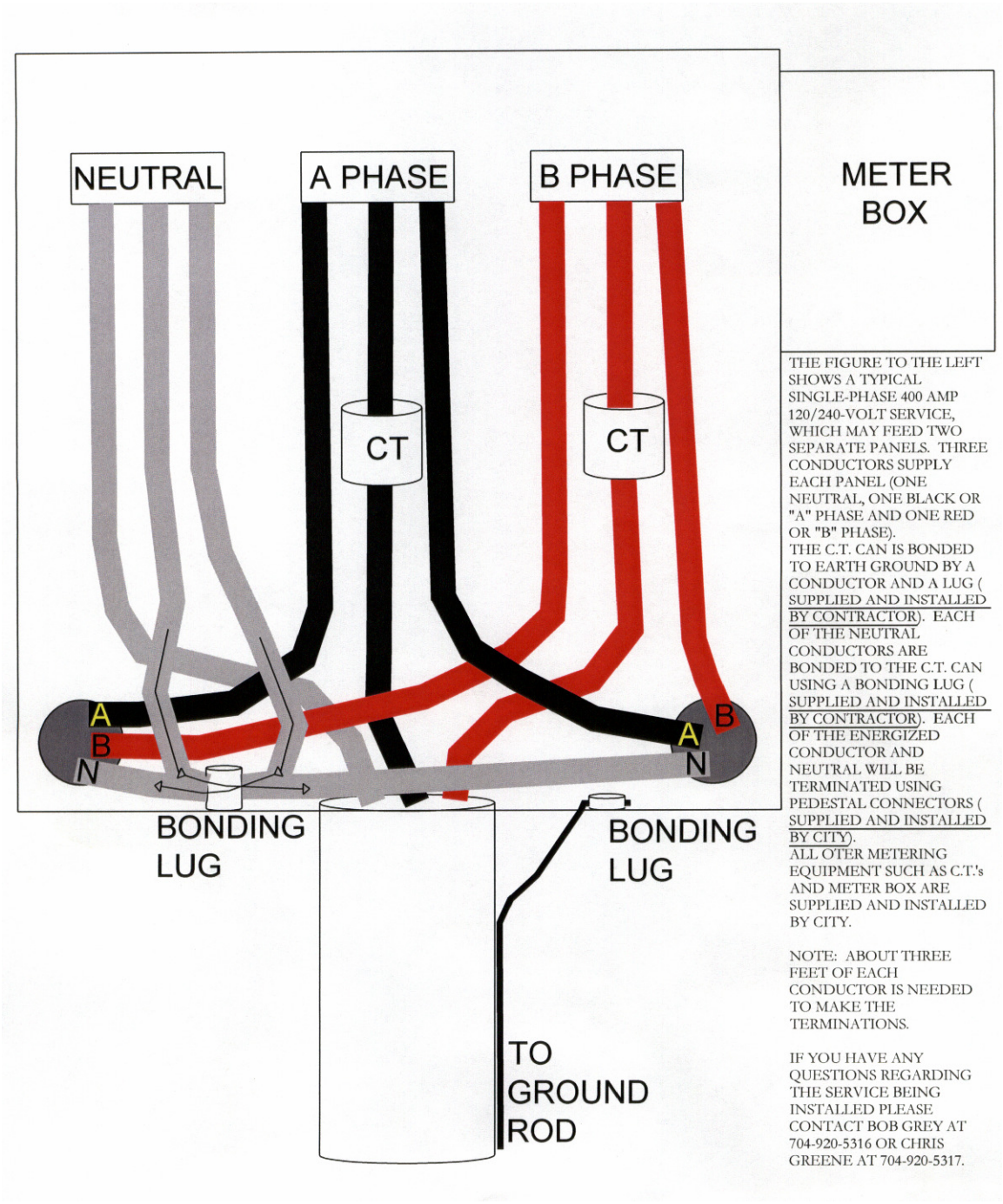

Figure 7: Typical CT Can Diagram.

10.0 Metering

10.1. **Requirement for the Initiation of Electric Service**. A certificate of occupancy as issued by an appropriate authority, must be obtained before electric service will be initiated.

10.2. **Residential Metering**. All residential electrical services in the City must be individually metered. Meter locations at duplexes and apartments should be ganged into one central location. Master metering of electric service is prohibited or restricted under the provisions of the federal Public Utilities Regulatory Policies Act of 1978 and N.C. General Statute 143-151.42.

10.3. **Mobile Home Metering**. Mobile home meter applications must consist of a mobile home "pedestal" provided by the City, which includes the customer meter enclosure and a main disconnect breaker. The customer must reimburse the City for the cost of the pedestal.

10.4. **Requests for Electric Meter Testing**. Electric meters are highly accurate instruments of measurement with expected life spans that exceed 40 years. In very few circumstances these meters measure incorrectly. A customer requesting a meter test should contact the Customer Service Department.

10.5. **Electric Meter Testing Charge**. An electric meter will be tested free of charge, once in a twelve month period at the request of the customer. If testing is requested more frequently than once in twelve months, the City will require the customer pay a charge based on the cost incurred by the City. If the meter test shows the meter to be inaccurate (plus or minus 2 percent), the meter may be adjusted.

10.6. **Meter Reading Schedule**. The City's meters will be read by City employees according to the City's schedule. Reading dates will vary slightly from month-to-month due to weekends, City holidays, weather conditions, and other factors. Monthly billing periods will be assumed to be 30 days.

10.7. **Meter Reading Errors**. The City's meter readers use modern meter reading equipment and techniques. If meter reading corrections are necessary, the City will promptly make them. A credit due a customer from a meter reading error will be posted to the customer's account or a check may be written to the customer, if requested.

10.8. **Associated Regulations**. The City's meter reading policy adheres to North Carolina Utilities Commission Rule Article 2, R8-8.

11.0 Line Extensions

11.1. **Standards**. The City strives to design, install, operate, and maintain the electric distribution system in compliance with good engineering and operating practices that are safe and economically feasible for the City.

11.2. **Deviations from the Least-Cost Method**. If the City's preferred method of service is not acceptable, the customer may pay a non-refundable contribution for the extra cost of providing and maintaining service by an acceptable alternate method. The cost to the customer will be for any amount that exceeds the cost of the City's initial, preferred method. The customer's preferred method will need to meet the qualifications of good engineering and operating practices.

11.3. **Associated Regulations**. Line extensions are made in accordance with North Carolina General Statute 160A-331 and 160A-332.

12.0 Overhead Line Extensions

12.1. **Overhead Extension Classifications**. Applications for electric service will be classified into one of the following defined classifications, and overhead service will be extended accordingly: permanent/non-seasonal residences, modular homes, and permanent establishments other than residences.

12.2. **Extensions to Permanent/Non-Seasonal Residences**. This classification includes permanent non-seasonal residences, including mobile homes, apartments, and condominiums that are of a permanent nature and require electric service on a regular basis. Single-phase electric service facilities will be extended to establishments of this classification at any premises within the service area of the City upon request of the owner or occupant. No contribution in aid of construction will be required if the City's standards for extending service are met.

12.3. **Extensions to Modular Homes**. Modular homes will be considered a permanent residence, and service will be extended provided that:

a. The modular home is on a permanent foundation with the wheels and axles removed; AND

b. The applicant for service can provide evidence of ownership of the property on which the modular home is located; AND

c. The applicant for service can provide evidence of ownership of the home; AND

d. The home is to be used as a permanent dwelling by the applicant for service rather than a weekend or summer cottage type dwelling; OR

e. The home is located in mobile home park served with permanent water and sewer

facilities and approved by the zoning authority in which it is located.

12.4. **Extensions to Permanent Establishments Other than Residences**.

This classification includes schools, public buildings, churches, commercial and industrial establishments, controlled environment livestock and poultry housing, or any other establishments determined by the City to be of a permanent nature, requiring electric service on a continuous basis. Single-phase electric service facilities will be extended to establishments of this classification at any premises within the service area of the City upon request by the owner or occupant. No contribution in aid of construction will be required if the City's standards for extending service are met.

13.0 Underground Line Extension

13.1. **Requirements for the Provision of Underground Service**. The City may extend underground service, upon request, to its customers. If the installation of underground facilities is, in the opinion of the City, more feasible than the installation of overhead facilities, the customer may receive a credit for their portion of the construction costs.

13.2. **Underground Service to New Development**. At the request of an owner or developer, the City may install underground distribution facilities to provide service to single residences, apartment houses, condominiums, and new developments where no overhead primary service exists. A fee per foot of service lateral may be required of the owner or developer. Incidental loads such as water pumps, swimming pools, club houses, etc., will be considered individual services. However, the total cost of a special three-phase service to any incidental loads will be charged. Refer to Section 7.0 for information about delivery points that are not consistent with the least-cost approach.

13.3. **Areas with Existing Overhead Primary**. At the request of an owner or developer, the City may furnish and install underground primary lines and service laterals in areas already being serviced with existing overhead primary service if the owner or developer agrees to contribute to the construction cost. The conversion of overhead to underground will be at the discretion of the City's Director of Electric Systems.

13.4. **Conversion of Service Drops**. At the request of an owner, the City may replace existing overhead service drops with underground service, in accordance with the following terms and conditions:

a. The owner may be required to pay a non-refundable charge to remove the existing overhead service; AND

b. In addition to the removal charge, the owner may be required to pay an installation charge; AND

c. It is the customer's responsibility to accommodate the underground service drop; AND

d. Where the City's existing overhead facilities are no longer adequate, new underground service may be installed at no cost to the customer.

13.5. **Underground Service to Recreational or Seasonal Residential Development.**

a. A contribution to the construction cost may be required.

b. The City may furnish and install the transformers, transformer enclosure, primary cable and terminators, primary bus, connectors (including those for secondary), and metering.

c. The owner or developer must provide and install all duct and cable for secondary service from the secondary terminals of the transformers or CT cabinet to the service entrance equipment. The owner or developer may be required to provide and/or install the transformer pad, the duct for the primary cable from the pad to the origin of the underground run, and a conduit from the pad to the nearest location appropriate for the installation of a meter. The owner or developer may be responsible for providing and installing cable terminations and splicing in troughs, current transformer cabinets, transformer pads or other junctions.

d. All work by both parties will be performed in accordance with the City's technical standards.

13.6. **Excess Installation Costs**. Where, due to rock conditions in the soil, the trenching work cannot be accomplished by use of standard trenching machines, any excess cost caused by these conditions shall be charged by the City to the owner or developer. Where there are other unusual conditions, such as high water table, which require installation procedures not normally used, the excess cost of those procedures may be charged to the owner or developer. The cost of cutting through and replacing pavement within the development shall be at the owner's or developer's expense.

13.7. **Removal of Temporary Overhead Facilities**. The owner or developer shall reimburse the City for the cost of installing and removing any temporary overhead facilities installed at the owner's or developer's request.

13.8. **Easement**. The owner or developer will furnish, without cost to the City, necessary easements and rights-of-way and will be required to initially cut and clear those easements. The owner or developer will be required to have the rights–of–way and all streets, alleys, sidewalks, and driveway entrances graded to final grade, and finalize lot lines before the construction of the electrical distribution system begins.

13.9. **Deviations from the Least-Cost Method**. The type of construction and the location of the facilities will be at the option of the City. If the owner or developer desires changes in either location or type of construction, the installations will be made only when the owner or developer pays the City the estimated additional cost incurred.

13.10. **Transformer Type and Location**. The City will have the option of placing transformers above ground, on pads of its specification or design, or underground in

enclosures of its specifications or design. The City will determine the practicality of placement.

13.11. **Vegetation**. Shrubs and trees requiring protection during the installation of the underground service will be the responsibility of the owner or developer, and the owner or developer will hold the City and its sub-contractors harmless against any claims for damage. It will be the responsibility of the owner or developer to re-seed and/or maintain the trench cover. In areas where the work is the City's responsibility, the City will take responsibility for re-seeding with common varieties and strawing grassy areas.

14.0 Renewable Energy Generator Interconnections

14.1. **General Requirements.**

a. *Applicability.*

1. This Standard contains the requirements, in addition to applicable tariffs and service regulations, for the interconnection and parallel operation of Generating Facilities with the City of Concord, North Carolina.

(a) A request to interconnect a certified inverter-based Generating Facility no larger than 20 kW for Residential and no larger than 100 kW for Non-Residential shall be evaluated under Section 2 Small Inverter Process. (See Attachments 3 and 4 for certification criteria.)

(b) A request to interconnect a certified Generating Facility no larger than 2 MW shall be evaluated under the Section 3 Fast Track Process. (See Attachments 3 and 4 for certification criteria.)

(c) A request to interconnect a Generating Facility larger than 2 MW, or a Generating Facility that does not pass the Fast Track Process or the Small Inverter Process, shall be evaluated under Section 4 Study Process.

2. Capitalized terms used herein shall have the meanings specified in the Glossary of Terms in Attachment 1 or the body of these procedures.

3. This Standard shall not apply to Generating Facilities already interconnected or approved for interconnection as of the effective date of this Standard, unless so agreed to by the City and the Interconnection Customer. However, this Standard shall apply if the Interconnection Customer proposes Material Modifications or transfers ownership of the Generating Facility after such date.

4. Prior to submitting its Interconnection Request, the Interconnection Customer may ask the City’s interconnection contact employee or office whether the proposed interconnection is subject to these procedures.

5. Infrastructure security of electric system equipment and operations and control hardware and software is essential to ensure day-to-day reliability and

operational security. All Utilities are expected to meet basic standards for electric system infrastructure and operational security, including physical, operational, and cyber-security practices.

6. References in these procedures to Interconnection Agreement are to the City of Concord Interconnection Agreement. (See Attachment 9.)

b. *Pre-Request.* The City shall designate an employee or office from which information on the application process and on an Affected System can be obtained through informal requests from the Interconnection Customer presenting a proposed project for a specific site. The name, telephone number, and e-mail address of such contact employee or office shall be made available on the City's Internet web site. Electric system information provided to the Interconnection Customer should include relevant system studies, interconnection studies, and other materials useful to an understanding of an interconnection at a particular point on the City's System, to the extent such provision does not violate confidentiality provisions of prior agreements or critical infrastructure requirements. The City shall comply with reasonable requests for such information.

c. *Interconnection Request.* The Interconnection Customer shall submit its Interconnection Request to the City, together with the non-refundable processing fee or deposit specified in the Interconnection Request. The Interconnection Request shall be date- and time-stamped upon receipt. The original date- and time-stamp applied to the Interconnection Request at the time of its original submission shall be accepted as the qualifying date- and time-stamp for the purposes of any timetable in these procedures. The City shall notify the Interconnection Customer within fifteen Business Days of the receipt of the Interconnection Request as to whether the Interconnection Request is complete or incomplete. If the Interconnection Request is incomplete, the City shall provide, along with notice that the Interconnection Request is incomplete, a written list detailing all information that must be provided to complete the Interconnection Request. The Interconnection Customer will have ten Business Days after receipt of the notice to submit the listed information or to request an extension of time to provide such information. If the Interconnection Customer does not provide the listed information or a request for an extension of time within the deadline, the Interconnection Request will be deemed withdrawn. An Interconnection Request will be deemed complete upon submission of the listed information to the City.

d. *Modification of the Interconnection Request.* Any Material Modification not agreed to in writing by the City and the Interconnection Customer may be deemed a withdrawal of the Interconnection Request and may require submission of a new Interconnection Request, unless proper notification of each Party by the other and a reasonable time to cure the problems created by the changes are undertaken.

e. *Site Control.* Documentation of site control is not required to be submitted with the Interconnection Request. However, the City may request a demonstration of site control if two or more proposed Generating Facilities are competing for capacity on the same circuit. The Interconnection Customer that can demonstrate site control

will have higher Queue Position than one that is on the same circuit. The Interconnection Customer must submit documentation of site control to the City at or before the time of execution of the Interconnection Agreement. Site control may be demonstrated through:

1. Ownership of, a leasehold interest in, or a right to develop a site for the purpose of constructing the Generating Facility;

2. An option to purchase or acquire a leasehold site for such purpose; or

3. An exclusivity or other business relationship between the Interconnection Customer and the entity having the right to sell, lease, or grant the Interconnection Customer the right to possess or occupy a site for such purpose.

f. *Queue Position.* The City shall assign a Queue Position based upon the date- and time-stamp of the Interconnection Request. The Queue Position of each Interconnection Request will be used to determine the cost responsibility for the Upgrades necessary to accommodate the interconnection. At the City's option, Interconnection Requests may be studied serially or in clusters for the purpose of the System Impact Study, should one be required. (See Section 4.4.)

g. *Interconnection Requests Submitted Prior to the Effective Date of these Procedures.* Nothing in this Standard affects an Interconnection Customer's Queue Position assigned before the effective date of these procedures. The Parties agree to complete work on any interconnection study agreement executed prior to the effective date of these procedures in accordance with the terms and conditions of that interconnection study agreement. Any new studies or other additional work will be completed pursuant to this Standard.

14.2. Optional Small Inverter Process for Certified Inverter-Based Generating Facilities No Larger than 20 kW Residential or 100 kW for Non-Residential

a. *Applicability.* The Small Inverter Process is available to an Interconnection Customer proposing to interconnect its inverter-based Generating Facility with the City's System if the Generating Facility is no larger than 20 kW for Residential or no larger than 100 kW for Non-Residential and if the Interconnection Customer's proposed Generating Facility meets the codes, standards, and certification requirements of Attachments 3 and 4 of these procedures, or the City has reviewed the design or tested the proposed Generating Facility and is satisfied that it is safe to operate.

b. *Interconnection Request.* The Interconnection Customer shall complete the Interconnection Request for a certified Small inverter-based Generating Facility (see Attachment 5) and submit it to the City, together with the non-refundable processing fee specified in the Interconnection Request.

1. The City shall evaluate the Interconnection Request for completeness and notify the Interconnection Customer within fifteen Business Days of receipt as to whether the Interconnection Request is complete or incomplete and, if incomplete, advise the Interconnection Customer what material is missing.

2. The City shall verify that the Generating Facility can be interconnected safely and reliably using the screens contained in the Fast Track Process. (See Section 3.2.1.) Unless the City determines and demonstrates that the Generating Facility cannot be interconnected safely and reliably, the City shall approve the Interconnection Request and return it to the Interconnection Customer.

c. *Certificate of Completion.*

1. After installation of the Generating Facility, the Interconnection Customer shall return the Certificate of Completion to the City. (See Attachment 5.) Prior to parallel operation, the City may inspect the Generating Facility for compliance with standards which may include a witness test, and may schedule appropriate metering replacement, if necessary.

2. The City shall notify the Interconnection Customer in writing that interconnection of the Generating Facility is authorized. If the witness test is not satisfactory, the City has the right to disconnect the Generating Facility. The Interconnection Customer has no right to operate in parallel with the City until a witness test has been performed, or waived on the Interconnection Request. Upon receipt of the Certificate of Completion the City and the Interconnection Customer shall agree on a reasonable time frame for the City to complete the witness test.

3. Interconnection and parallel operation of the Generating Facility is subject to the Terms and Conditions stated in Attachment 5 of these procedures.

d. *Contact Information.* The Interconnection Customer must provide the contact information for the legal applicant (i.e., the Interconnection Customer). If another entity is responsible for interfacing with the City, that contact information must also be provided on the Interconnection Request.

e. *Ownership Information.* The Interconnection Customer shall provide the legal name(s) of the owner(s) of the Generating Facility.

f. *UL 1741 Listed.* The Underwriters' Laboratories (UL) 1741 standard (Inverters, Converters, Controllers and Interconnection System Equipment for Use With Distributed Energy Resources) addresses the electrical interconnection design of various forms of generating equipment. Many manufacturers submit their equipment to a nationally recognized testing laboratory that verifies compliance with UL 1741. This "listing" is then marked on the equipment and supporting documentation.

14.3. Optional Fast Track Process for Certified Generating Facilities No Larger than 2 MW

a. *Applicability.* The Fast Track Process is available to an Interconnection Customer proposing to interconnect its Generating Facility with the City's System if the Generating Facility is no larger than 2 MW and if the Interconnection Customer's proposed Generating Facility meets the codes, standards, and certification

requirements of Attachments 3 and 4 of these procedures, or the City has reviewed the design or tested the proposed Generating Facility and is satisfied that it is safe to operate.

b. *Initial Review.* The City shall perform an initial review using the screens set forth below, shall notify the Interconnection Customer of the results, and include with the notification copies of the analysis and data underlying the City's determinations under the screens.

1. Screens:

(a) The proposed Generating Facility's Point of Interconnection must be on a portion of the City's Distribution System.

(b) For interconnection of a proposed Generating Facility to a radial distribution circuit, the aggregated generation, including the proposed Generating Facility, on the circuit shall not exceed 15% of the line section annual peak load as most recently measured at the substation. A line section is that portion of a City's System connected to a customer bounded by automatic sectionalizing devices or the end of the distribution line.

(c) For interconnection of a proposed Generating Facility to the load side of spot network protectors, the proposed Generating Facility must utilize an inverter-based equipment package and, together with the aggregated other inverter-based generation, shall not exceed the smaller of 5% of a spot network's maximum load or 50 kW.b

(d) The proposed Generating Facility, in aggregation with other generation on the distribution circuit, shall not contribute more than 10% to the distribution circuit's maximum fault current at the point on the high voltage (primary) level nearest the proposed point of change of ownership.

(e) The proposed Generating Facility, in aggregate with other generation on the distribution circuit, shall not cause any distribution protective devices and equipment (including, but not limited to, substation breakers, fuse cutouts, and line reclosers), or Interconnection Customer equipment on the system to exceed 87.5% of the short circuit interrupting capability; nor shall the interconnection be proposed for a circuit that already exceeds 87.5% of the short circuit interrupting capability.

(f) Using the table below, determine the type of interconnection to a primary distribution line. This screen includes a review of the type of electrical service provided to the Interconnection Customer, including line configuration and the transformer connection to limit the potential for creating over-voltages on the City's System due to a loss of ground

b. A spot network is a type of distribution system found within modern commercial buildings to provide high reliability of service to a single customer. (Standard Handbook for Electrical Engineers, 11th edition, Donald Fink, McGraw Hill Book Company.)

during the operating time of any anti-islanding function.

Primary Distribution Line Type	Type of Interconnection to Primary Distribution Line	Result/Criteria
Three-phase, three wire	Three-phase or single-phase, phase-to-phase	Pass screen
Three-phase, four wire	Effectively-grounded three-phase or single-phase, line-to-neutral	Pass screen

(g) If the proposed Generating Facility is to be interconnected on single-phase shared secondary, the aggregate generation capacity on the shared secondary, including the proposed Generating Facility, shall not exceed 20 kW.

(h) If the proposed Generating Facility is single-phase and is to be interconnected on a center tap neutral of a 240 volt service, its addition shall not create an imbalance between the two sides of the 240 volt service of more than 20% of the nameplate rating of the service transformer.

(i) The proposed Generating Facility shall not cause voltage distortions at the Point of Interconnection to the City-Owned facilities to exceed 3% of nominal 60 Hertz voltage.

(j) No construction of facilities by the City on its own System shall be required to accommodate the Generating Facility.

2. If the proposed interconnection passes the screens, the Interconnection Request shall be approved and the City will provide the Interconnection Customer an executable Interconnection Agreement within ten Business Days after the determination.

3. If the proposed interconnection fails the screens, but the City determines that the Generating Facility may nevertheless be interconnected consistent with safety, reliability, and power quality standards, the City shall provide the Interconnection Customer an executable Interconnection Agreement within five Business Days after the determination.

4. If the proposed interconnection fails the screens, but the City does not or cannot determine from the initial review that the Generating Facility may nevertheless be interconnected consistent with safety, reliability, and power quality standards unless the Interconnection Customer is willing to consider minor modifications or further study, the City shall provide the Interconnection Customer with the opportunity to attend a customer options meeting.

5. City reserves the right to accept or reject any Interconnection Request that would negatively impact existing customers as determined by the City.

c. *Customer Options Meeting.* Regardless of which process the Interconnection Request falls under (Small Inverter, Fast Track, or Study Process), if the City determines the Interconnection Request cannot be approved without minor modifications at minimal cost; or a supplemental study or other additional studies or actions; or at significant cost to address safety, reliability, or power quality problems, the City shall notify the Interconnection Customer and provide copies of all data and analyses underlying its conclusion. The City shall offer to convene a customer options meeting to review possible Interconnection Customer facility modifications or the screen analysis and related results, to determine what further steps are needed to permit the Generating Facility to be connected safely and reliably. At the time of notification of the City's determination, or at the customer options meeting, the City shall:

1. Offer to perform facility modifications or minor modifications to the City's System (e.g., changing meters, fuses, relay settings) and provide a non-binding good faith estimate of the limited cost to make such modifications to the City's System; or

2. Offer to continue evaluating the Interconnection Request under the Section 4 Study Process. The Study Process is required for all proposed Generating Facilities 2 MW and larger.

14.4. **Study Process**

a. *Applicability.* The Study Process shall be used by an Interconnection Customer proposing to interconnect its Generating Facility with the City's System if the Generating Facility is larger than 2 MW, is not certified, or is certified but did not pass the Fast Track Process or the Small Inverter Process.

b. *Scoping Meeting.*

1. A scoping meeting will be held within fifteen Business Days after the Interconnection Request is deemed complete, or as otherwise mutually agreed to by the Parties. The City and the Interconnection Customer will bring to the meeting personnel, including system engineers and other resources as may be reasonably required to accomplish the purpose of the meeting. The scoping meeting may be omitted by mutual agreement.

2. The purpose of the scoping meeting is to discuss the Interconnection Request and review existing studies relevant to the Interconnection Request. The Parties shall further discuss whether the City should perform a Feasibility Study or proceed directly to a System Impact Study, a Facilities Study, or an Interconnection Agreement.

3. If the Parties agree that a Feasibility Study should be performed, the City shall provide the Interconnection Customer, as soon as possible, after the scoping meeting, a Feasibility Study Agreement (Attachment 6), including an outline of the scope of the study and a non-binding good faith estimate of the cost to

perform the study.

4. If the Parties agree not to perform a Feasibility Study, but to proceed directly to a System Impact Study or Facilities Study, the City shall provide the Interconnection Customer, either a System Impact Study Agreement (Attachment 7) or a Facilities Study Agreement (Attachment 8), as appropriate, including an outline of the scope of the study and a non-binding good faith estimate of the cost to perform the study in a time frame mutually agreed upon by the Parties in the scoping meeting.

5. If the Parties agree not to perform a Feasibility Study, but to proceed directly to an Interconnection Agreement, the City shall provide the Interconnection Customer an executable Interconnection Agreement in a time frame mutually agreed upon by the Parties in the Scoping meeting.

c. *Feasibility Study*

1. The Feasibility Study shall identify any potential adverse system impacts that would result from the interconnection of the Generating Facility.

2. In order to remain in consideration for interconnection, the Interconnection Customer must return the executed Feasibility Study Agreement within 15 Business Days.

3. A deposit of the good faith estimated Feasibility Study costs or earnest money of $1,000 may be required from the Interconnection Customer.

4. The scope of and cost responsibilities for the Feasibility Study are described in the Feasibility Study Agreement.

5. If the Feasibility Study shows no potential for adverse system impacts, the City shall send the Interconnection Customer within fifteen Business Days a Facilities Study Agreement, including an outline of the scope of the study and a non-binding good faith estimate of the cost to perform the study. If a Facilities Study is not required, the City shall send the Interconnection Customer an executable Interconnection Agreement within fifteen Business Days.

6. If the Feasibility Study shows the potential for adverse system impacts, the review process shall proceed to the appropriate System Impact Studies.

d. *System Impact Studies.*

1. The System Impact Studies shall identify and detail the electric system impacts that would result if the proposed Generating Facility were interconnected without project modifications or electric system modifications, focusing on the adverse system impacts identified in the Feasibility Study, or to study potential impacts, including, but not limited to, those identified in the scoping meeting. The System Impact Studies shall evaluate the impact of the proposed interconnection on the reliability of the electric system.

2. If potential adverse Distribution System impacts are identified in the scoping

meeting or shown in the Feasibility Study, a Distribution System Impact Study must be performed. The City shall send the Interconnection Customer a Distribution System Impact Study Agreement within fifteen Business Days of transmittal of the Feasibility Study or the scoping meeting if no Feasibility Study is to be performed, including an outline of the scope of the study and a non-binding good faith estimate of the cost to perform the study.

3. If potential adverse Transmission System impacts are identified in the scoping meeting or shown in the Feasibility Study or Distribution System Impact Study, a Transmission System Impact Study must be performed. The City shall send the Interconnection Customer a Transmission System Impact Study Agreement within fifteen Business Days of transmittal of the Feasibility Study or Distribution System Impact Study or the scoping meeting if no Feasibility Study or Distribution System Impact Study is to be performed, including an outline of the scope of the study and a non-binding good faith estimate of the cost to perform the study.

4. In order to remain under consideration for interconnection, the Interconnection Customer must return an executed System Impact Study Agreement within 30 Business Days.

5. A deposit of the good faith estimated cost of a Distribution System Impact Study and one half of the good faith estimated cost of a Transmission System Impact Study may be required from the Interconnection Customer.

6. The scope of and cost responsibilities for a System Impact Study are described in the System Impact Study Agreement.

7. If the System Impact Studies show no potential for adverse system impacts, the City shall send the Interconnection Customer within five Business Days a Facilities Study Agreement, including an outline of the scope of the study and a non-binding good faith estimate of the cost to perform the study. If no additional facilities are required, the City shall send the Interconnection Customer an executable Interconnection Agreement within fifteen Business Days.

e. *Facilities Study.*

1. The Facilities Study shall specify and estimate the cost of the equipment, engineering, procurement and construction work (including overheads) needed to implement the conclusions of Feasibility Study and/or System Impact Studies and to allow the Generating Facility to be interconnected and operated safely and reliably.

2. The City shall design any required Interconnection Facilities and/or Upgrades under the Facilities Study Agreement. The City may contract with consultants to perform activities required under the Facilities Study Agreement. The Interconnection Customer and the City may agree to allow the Interconnection Customer to separately arrange for the design of some of the Interconnection Facilities. In such cases, facilities design will be reviewed and/or modified prior to acceptance by the City, under the provisions of the Facilities Study

Agreement. If the Parties agree to separately arrange for design and construction, and provided security and confidentiality requirements can be met, the City shall make sufficient information available to the Interconnection Customer in accordance with confidentiality and critical infrastructure requirements to permit the Interconnection Customer to obtain an independent design and cost estimate for any necessary facilities.

3. In order to remain under consideration for interconnection, or, as appropriate, in the City's interconnection queue, the Interconnection Customer must return the executed Facilities Study Agreement or a request for an extension of time within 30 Business Days.

4. A deposit of the good faith estimated costs for the Facilities Study may be required from the Interconnection Customer.

5. The scope of and cost responsibilities for the Facilities Study are described in the Facilities Study Agreement.

6. Upon completion of the Facilities Study, and with the agreement of the Interconnection Customer to pay for Interconnection Facilities and Upgrades identified in the Facilities Study, the City shall provide the Interconnection Customer an executable Interconnection Agreement within fifteen Business Days.

14.5. **Provisions that Apply to All Interconnection Requests**

a. *Reasonable Efforts.* The City shall make reasonable efforts to meet all time frames provided in these procedures unless the City and the Interconnection Customer agree to a different schedule. If the City cannot meet a deadline provided herein, it shall notify the Interconnection Customer, explain the reason for the failure to meet the deadline, and provide an estimated time by which it will complete the applicable interconnection procedure in the process.

b. *Disputes.*

1. The Parties agree to attempt to resolve all disputes arising out of the interconnection process according to the provisions of this section.

2. In the event of a dispute, either Party shall provide the other Party with a written Notice of Dispute. Such Notice shall describe in detail the nature of the dispute.

3. Each Party agrees to conduct all negotiations in good faith.

c. *Interconnection Metering.* Any metering necessitated by the use of the Generating Facility shall be installed at the Interconnection Customer's expense in accordance with all applicable regulatory requirements or the City's specifications.

d. *Commissioning.* Commissioning tests of the Interconnection Customer's installed equipment shall be performed pursuant to applicable codes and standards. The City must be given at least fifteen Business Days written notice, or as otherwise mutually agreed to by the Parties, of the tests and may be present to witness the

commissioning tests.

e. *Confidentiality.*

1. Confidential Information shall mean any confidential and/or proprietary information provided by one Party to the other Party that meets the requirements of the North Carolina Public Records Laws including but not limited to N.C.G.S. Sec. 132-1.2.

2. Confidential Information does not include information previously in the public domain, required to be publicly submitted or divulged by Governmental Authorities, or necessary to be divulged in an action to enforce these procedures. Each Party receiving Confidential Information shall hold such information in confidence and shall not disclose it to any third party nor to the public without the prior written authorization from the Party providing that information, except to fulfill obligations under these procedures, or to fulfill legal or regulatory requirements.

(a) *Each Party shall employ at least the same standard of care to protect Confidential Information obtained from the other Party as it employs to protect its own Confidential Information.*

(b) *Each Party is entitled to equitable relief, by injunction or otherwise, to enforce its rights under this provision to prevent the release of Confidential Information without bond or proof of damages, and may seek other remedies available at law or in equity for breach of this provision.*

3. If information is requested by the Commission from one of the Parties that is otherwise required to be maintained in confidence pursuant to these procedures, the Party shall provide the requested information to the Commission within the time provided for in the request for information. In providing the information to the Commission, the Party may request that the information be treated as confidential and non-public in accordance with North Carolina law and that the information be withheld from public disclosure.

f. *Comparability.* The City shall receive, process, and analyze all Interconnection Requests received under these procedures in a timely manner, as set forth in these procedures. The City shall use the same reasonable efforts in processing and analyzing Interconnection Requests from all Interconnection Customers, whether the Generating Facility is owned or operated by the City, its subsidiaries or affiliates, or others.

g. *Record Retention.* The City shall maintain for three years records, subject to audit, of all Interconnection Requests received under these procedures, the times required to complete Interconnection Request approvals and disapprovals, and justification for the actions taken on the Interconnection Requests.

h. *Interconnection Agreement.* After receiving an Interconnection Agreement from the City, the Interconnection Customer shall have 30 Business Days, or another mutually agreeable timeframe, to sign and return the Interconnection Agreement. If the Interconnection Customer does not sign the Interconnection Agreement within

such time, the Interconnection Request shall be deemed withdrawn. The City may waive the withdrawal if no other Interconnection Requests are pending for Generating Facilities that propose to interconnect to the same circuit on the City's System. After the Parties sign the Interconnection Agreement, the interconnection of the Generating Facility shall proceed under the provisions of the Interconnection Agreement.

i. *Coordination with Affected Systems.* The City shall coordinate the conduct of any studies required to determine the impact of the Interconnection Request on Affected Systems with Affected System operators and, if possible, include those results (if available) in its applicable studies within the time frame specified in these procedures. The City will include such Affected System operators in all meetings held with the Interconnection Customer as required by these procedures. The Interconnection Customer will cooperate with the City in all matters related to the conduct of studies and the determination of modifications to Affected Systems. A City which may be an Affected System shall cooperate with the City with whom interconnection has been requested in all matters related to the conduct of studies and the determination of modifications to Affected Systems.

j. *Capacity of the Generating Facility.*

1. If the Interconnection Request is for an increase in capacity for an existing Generating Facility, the Interconnection Request shall be evaluated on the basis of the new total capacity of the Generating Facility.

2. If the Interconnection Request is for a Generating Facility that includes multiple energy production devices at a site for which the Interconnection Customer seeks a single Point of Interconnection, the Interconnection Request shall be evaluated on the basis of the aggregate capacity of the multiple devices, unless otherwise agreed to by the City and the Interconnection Customer.

3. The Interconnection Request shall be evaluated using the maximum rated capacity of the Generating Facility, unless otherwise agreed to by the City and the Interconnection Customer.

k. *Interconnection Agreement Non-Transferable.*

1. The Interconnection Agreement is non-transferable. The Interconnection Customer shall notify the purchaser of the Generating Facility that a new Interconnection Request must be submitted to the City within 30 Business Days of the transfer of ownership or the City's Interconnection Facilities shall be removed or disabled and the Generating Facility disconnected from the City's System.

2. The technical requirements in the Interconnection Agreement shall be applicable to subsequent owners as long as (1) the Generating Facility's maximum rated capacity has not been changed; (2) the Generating Facility has not been modified so as to change its electrical characteristics; (3) the interconnection system has not been modified; and (4) a new Interconnection

Request and Interconnection Agreement is completed.

l. *Isolating or Disconnecting the Generating Facility.*

1. The City may isolate the Interconnection Customer's premises and/or Generating Facility from the City's System when necessary in order to construct, install, repair, replace, remove, investigate or inspect any of the City's equipment or part of City's System; or if the City determines that isolation of the Interconnection Customer's premises and/or Generating Facility from the City's System is necessary because of emergencies, forced outages, force majeure or compliance with prudent electrical practices.

2. Whenever feasible, the City shall give the Interconnection Customer reasonable notice of the isolation of the Interconnection Customer's premises and/or Generating Facility from the City's System.

3. Notwithstanding any other provision of this Standard, if at any time the City determines that the continued operation of the Generating Facility may endanger either (1) the City's personnel or other persons or property or (2) the integrity or safety of the City's System, or otherwise cause unacceptable power quality problems for other electric consumers, the City shall have the right to isolate the Interconnection Customer's premises and/or Generating Facility from the City's System.

4. The City may disconnect from the City's System any Generating Facility determined to be malfunctioning, or not in compliance with this Standard. The Interconnection Customer must provide proof of compliance with this Standard before the Generating Facility will be reconnected.

m. *Limitation of Liability.* Each Party's liability to the other Party for any loss, cost, claim, injury, liability, or expense, including reasonable attorney's fees, relating to or arising from any act or omission hereunder, shall be limited to the amount of direct damage actually incurred. In no event shall either Party be liable to the other Party for any indirect, special, incidental, consequential, or punitive damages of any kind.

n. *Indemnification.* The Parties shall at all times indemnify, defend and save the other Party harmless from any and all damages, losses, claims, including claims and actions relating to injury or death of any person or damage to property, demand, suits, recoveries, costs and expenses, court costs, attorney's fees, and all other obligations by or to third parties, arising out of or resulting from the other Party's action or inaction of its obligations hereunder on behalf of the indemnifying Party, except in cases of gross negligence or intentional wrongdoing by the indemnified Party.

o. *Insurance.* The Interconnection Customer shall obtain and retain, for as long as the Generating Facility is interconnected with the City's System, liability insurance which protects the Interconnection Customer from claims for bodily injury and/or property damage. The amount of such insurance shall be sufficient to insure against all reasonably foreseeable direct liabilities given the size and nature of the generating equipment being interconnected, the interconnection itself, and the

characteristics of the system to which the interconnection is made. This insurance shall be primary for all purposes. The Interconnection Customer shall provide certificates evidencing this coverage as required by the City. Such insurance shall be obtained from an insurance provider authorized to do business in North Carolina. The City reserves the right to refuse to establish or continue the interconnection of the Generating Facility with the City's System, if such insurance is not in effect.

1. For an Interconnection Customer that is a residential customer of the City proposing to interconnect a Generating Facility no larger than 20 kW, the required coverage shall be a standard homeowner's insurance policy with liability coverage in the amount of at least $100,000 per occurrence.

2. For an Interconnection Customer that is a non-residential customer of the City proposing to interconnect a Generating Facility no larger than 100 kW, the required coverage shall be comprehensive general liability insurance with coverage in the amount of at least $300,000 per occurrence.

3. For an Interconnection Customer that is a non-residential customer of the City proposing to interconnect a Generating Facility larger than 100 kW and less than 10 MW, the required coverage shall be comprehensive general liability insurance with coverage in the amount of at least $1,000,000 per occurrence.

4. An Interconnection Customer of sufficient credit-worthiness may propose to provide this insurance via a self-insurance program if it has a self-insurance program established in accordance with commercially acceptable risk management practices, and such a proposal shall not be unreasonably rejected.

Attachment 1

Glossary of Terms

Small Inverter Process – The procedure for evaluating an Interconnection Request for a certified inverter-based Generating Facility no larger than 20 kW for residential or 100 kW for non-residential that uses the Section 3 screens. The application process uses an all-in-one document that includes a simplified Interconnection Request, simplified procedures, and a brief set of Terms and Conditions. (See Attachment 5.)

Affected System – An electric system other than the City's System that may be affected by the proposed interconnection. The owner of an Affected System might be a Party to the Interconnection Agreement or other study agreements needed to interconnect the Generating Facility.

Applicable Laws and Regulations – All duly promulgated applicable federal, state and local laws, regulations, rules, ordinances, codes, decrees, judgments, directives, or judicial or administrative orders, permits and other duly authorized actions of any Governmental Authority.

Business Day – Monday through Friday, excluding State Holidays.

Commission – The North Carolina Utilities Commission.

Default – The failure of a breaching Party to cure its breach under the Interconnection Agreement.

Distribution System – The City's facilities and equipment used to transmit electricity to ultimate usage points such as homes and industries from nearby generators or from interchanges with higher voltage transmission networks which transport bulk power over longer distances. The voltage levels at which Distribution Systems operate differ among areas.

Distribution Upgrades – The additions, modifications, and upgrades to the City's Distribution System at or beyond the Point of Interconnection to facilitate interconnection of the Generating Facility and render the service necessary to allow the Generating Facility to operate in parallel with the City and to inject electricity onto the City's System. Distribution Upgrades do not include Interconnection Facilities.

Fast Track Process – The procedure for evaluating an Interconnection Request for a certified Generating Facility no larger than 2 MW that includes the Section 3 screens, and customer options meeting.

Generating Facility – The Interconnection Customer's device for the production of electricity identified in the Interconnection Request, but shall not include the Interconnection Customer's Interconnection Facilities.

Good Utility Practice – Any of the practices, methods and acts engaged in or approved by a significant portion of the electric industry during the relevant time period, or any of the practices, methods and acts which, in the exercise of reasonable judgment in light of the facts known at the time the decision was made, could have been expected to accomplish the desired result at a reasonable cost consistent with good business practices, reliability, safety and expedition. Good Utility Practice is not intended to be limited to the optimum practice, method, or act to the exclusion of all others, but rather to be acceptable practices, methods, or acts generally accepted in the region.

Governmental Authority – Any federal, state, local or other governmental regulatory or administrative agency, court, commission, department, board, or other governmental subdivision, legislature, rulemaking board, tribunal, or other governmental authority having jurisdiction over the Parties, their respective facilities, or the respective services they provide, and exercising or

entitled to exercise any administrative, executive, police, or taxing authority or power; provided, however, that such term does not include the Interconnection Customer, the City, or any affiliate thereof.

Interconnection Customer – Any entity, including the City, that proposes to interconnect its Generating Facility with the City's System.

Interconnection Facilities – The City's Interconnection Facilities and the Interconnection Customer's Interconnection Facilities. Collectively, Interconnection Facilities include all facilities and equipment between the Generating Facility and the Point of Interconnection, including any modification, additions or upgrades that are necessary to physically and electrically interconnect the Generating Facility to the City's System. Interconnection Facilities are sole use facilities and shall not include Upgrades.

Interconnection Request – The Interconnection Customer's request, in accordance with these procedures, to interconnect a new Generating Facility, or to increase the capacity of, or make a Material Modification to, an existing Generating Facility that is interconnected with the City's System.

Material Modification – A modification to machine data or equipment configuration or to the interconnection site of the Generating Facility that has a material impact on the cost, timing or design of any Interconnection Facilities or Upgrades.

Network Upgrades – Additions, modifications, and upgrades to the City's Transmission System required to accommodate the interconnection of the Generating Facility to the City's System. Network Upgrades do not include Distribution Upgrades.

Operating Requirements – Any operating and technical requirements that may be applicable due to Regional Reliability Organization, Independent System Operator, control area, or the City's requirements, including those set forth in the Interconnection Agreement.

Party or Parties – The City of Concord, North Carolina, Interconnection Customer, and possibly the owner of an Affected System, or any combination of the above.

Point of Interconnection – The point where the Interconnection Facilities connect with the City's System.

Public Staff – The Public Staff of the North Carolina Utilities Commission.

Queue Position – The order of a valid Interconnection Request, relative to all other pending valid Interconnection Requests, that is established based upon the date and time of receipt of the valid Interconnection Request by the City and a demonstration of site control, if requested.

Reasonable Efforts – With respect to an action required to be attempted or taken by a Party under the Interconnection Agreement, efforts that are timely and consistent with Good Utility Practice and are otherwise substantially equivalent to those a Party would use to protect its own interests.

Standard – The interconnection procedures, forms and agreements approved by the City of Concord's Council for interconnection of Generating Facilities to its City System.

Study Process – The procedure for evaluating an Interconnection Request that includes the Section 4 scoping meeting, feasibility study, system impact study, and facilities study.

System – The facilities owned, controlled or operated by the City that are used to provide electric service in North Carolina.

Utility – The entity that owns, controls, or operates facilities used for providing electric service in North Carolina.

Transmission System – The facilities owned, controlled or operated by the City that are used to transmit electricity in North Carolina.

Upgrades – The required additions and modifications to the City's System at or beyond the Point of Interconnection. Upgrades may be Network Upgrades or Distribution Upgrades. Upgrades do not include Interconnection Facilities.

Attachment 2

CITY OF CONCORD
INTERCONNECTION REQUEST
For Generating Facilities Larger than 20 kW Residential or Larger than 100 kW Non-Residential

Utility: _____
Designated Contact Person: _____
Address: _____
Telephone Number: _____
Fax: _____ E-Mail Address: _____

An Interconnection Request is considered complete when it provides all applicable and correct information required below.

Preamble and Instructions

An Interconnection Customer who requests a City of Concord interconnection must submit this Interconnection Request by hand delivery, mail, e-mail, or fax to the City.

Request for: Fast Track Process __ Study Process __

(All Generating Facilities 2 MW and larger must use the Study Process.)

Processing Fee or Deposit

Fast Track Process – Non-Refundable Processing Fees

- If the Generating Facility is larger than 20 kW but not larger than 100 kW, the fee is $250.
- If the Generating Facility is larger than 100 kW but not larger than 2 MW, the fee is $500.

Study Process – Deposit

If the Interconnection Request is submitted under the Study Process, whether a new submission or an Interconnection Request that did not pass the Fast Track Process, the Interconnection Customer shall submit to the City a deposit not to exceed $1,000 towards study costs.

Change in Ownership – Non-Refundable Processing Fee

If the Interconnection Request is submitted solely due to a transfer of ownership of the Generating Facility, the fee is $50.

Interconnection Customer Information (Utility Billing Customer)
Legal Name of the Interconnection Customer (or, if an individual, individual's name)

Name: _____

Contact Person: _____

Mailing Address: _____

City: _____ State: _____ Zip: _____

Facility Location (if different from above): _____

Telephone (Day): _____ Telephone (Evening): _____

Fax: _____ E-Mail Address: _____

Alternative Contact Information (if different from the Interconnection Customer)

Contact Name: _____

Title: _____

Address: _____

_____

Telephone (Day): _____ Telephone (Evening): _____

Fax: _____ E-Mail Address: _____

Installer

Name: _____

Address: _____

_____

Telephone (Day): _____ Telephone (Evening): _____

Fax: _____ E-Mail Address: _____

Application is for: _____ New Generating Facility

_____ Capacity Addition to Existing Generating Facility

_____ Transfer of Ownership of Existing Generating Facility

If capacity addition to existing Generating Facility, please describe: _____

_____

Will the Generating Facility be used for any of the following?

To Supply Power to the Interconnection Customer? Yes ____ No ____

To Supply Power to the Utility? Yes _____ No _____

To Supply Power to Others? Yes _____ No _____

For installations at locations with existing electric service to which the proposed Generating Facility will interconnect, provide:

_____
(Existing Account Number*)

Requested Point of Interconnection: _____
Interconnection Customer's Requested In-Service Date: _____

Generating Facility Information

Data apply only to the Generating Facility, not the Interconnection Facilities.

Energy Source: Solar __ Wind __ Hydro __ Hydro Type (e.g. Run-of-River): _____
Diesel __ Natural Gas __ Fuel Oil __ Other (state type) _____

Prime Mover: Fuel Cell __ Recip Engine __ Gas Turbine __ Steam Turbine __
Microturbine __ PV __ Other _____

Type of Generator: Synchronous __ Induction __ Inverter __

Generator Nameplate Rating: _____ kW (Typical) Generator Nameplate: _____ kVAR

Interconnection Customer or Customer-Site Load: _____ kW (if none, so state)

Typical Reactive Load (if known): _____

Maximum Physical Export Capability Requested: _____ kW
Customer Requested Primary Voltage: _____
Customer Requested Secondary Voltage: _____

List components of the Generating Facility equipment package that are currently certified:

	Equipment Type	Certifying Entity
1.	_____	_____
2.	_____	_____
3.	_____	_____
4.	_____	_____
5.	_____	_____

Is the prime mover compatible with the certified protective relay package? Yes __ No __
Generator (or solar collector)

Manufacturer, Model Name, & Number: _____

Version Number: _____

Nameplate Output Power Rating in kW: (Summer) _____ (Winter) _____

Nameplate Output Power Rating in kVA: (Summer) _____ (Winter) _____

Individual Generator Power Factor

Rated Power Factor: Leading: _____Lagging: _____

Total Number of Generators in wind farm to be interconnected pursuant to this Interconnection Request: _____ Elevation: _____

Single phase __ Three phase __

Inverter Manufacturer, Model Name, & Number (if used): _____

List of adjustable set points for the protective equipment or software: _____

Note: A completed Power Systems Load Flow data sheet must be supplied with the Interconnection Request.

Generating Facility Characteristic Data (for inverter-based machines)

Max design fault contribution current: _____ Instantaneous _____ or RMS? ____

Harmonics Characteristics: _____

Start-up requirements: _____

Generating Facility Characteristic Data (for rotating machines)

RPM Frequency: _____

(*) Neutral Grounding Resistor (if applicable): _____

Synchronous Generators:

Direct Axis Synchronous Reactance, Xd: _____ P.U.

Direct Axis Transient Reactance, X'_d: _____ P.U.

Direct Axis Subtransient Reactance, X''_d: _____ P.U.

Negative Sequence Reactance, X_2: _____ P.U.

Zero Sequence Reactance, X_0: _____ P.U.

KVA Base: _____

Field Volts: _____

Field Amperes: _____

Induction Generators:

Motoring Power (kW): _____

I_2^2t or K (Heating Time Constant): _____

Rotor Resistance, Rr: _____

Stator Resistance, Rs: _____

Stator Reactance, Xs: _____

Rotor Reactance, Xr: _____

Magnetizing Reactance, Xm: _____

Short Circuit Reactance, Xd'': _____

Exciting Current: _____

Temperature Rise: _____

Frame Size: _____

Design Letter: _____

Reactive Power Required In Vars (No Load): _____

Reactive Power Required In Vars (Full Load): _____

Total Rotating Inertia, H: _____ Per Unit on kVA Base

Note: Please contact the City prior to submitting the Interconnection Request to determine if the specified information above is required.

Excitation and Governor System Data for Synchronous Generators Only

Provide appropriate IEEE model block diagram of excitation system, governor system and power system stabilizer (PSS) in accordance with the regional reliability council criteria. A PSS may be determined to be required by applicable studies. A copy of the manufacturer's block diagram may not be substituted.

Interconnection Facilities Information

Will a transformer be used between the generator and the point of common coupling?

Yes __ No __

Will the transformer be provided by the Interconnection Customer? Yes __ No __

Transformer Data (if applicable, for Interconnection Customer-owned transformer):

Is the transformer: Single phase __ Three phase __ Size: _____ kVA

Transformer Impedance: _____ % on _____ kVA Base
If Three Phase:

Transformer Primary: _____ Volts _____ Delta _____ Wye _____ Wye Grounded

Transformer Secondary: _____ Volts _____ Delta _____ Wye _____ Wye Grounded

Transformer Tertiary: _____ Volts _____ Delta _____ Wye _____ Wye Grounded

Transformer Fuse Data (if applicable, for Interconnection Customer-owned fuse):
(Attach copy of fuse manufacturer's Minimum Melt and Total Clearing Time-Current Curves)
Manufacturer: _____ Type: _____ Size: _____ Speed: _____

Interconnecting Circuit Breaker (if applicable):
Manufacturer: _____ Type: _____

Load Rating (Amps): ____ Interrupting Rating (Amps): ____ Trip Speed (Cycles): _____

Interconnection Protective Relays (if applicable):
If Microprocessor-Controlled:
List of Functions and Adjustable Setpoints for the protective equipment or software:

Setpoint Function	Minimum	Maximum
1. _____	_____	_____
2. _____	_____	_____
3. _____	_____	_____
4. _____	_____	_____
5. _____	_____	_____
6. _____	_____	_____

If Discrete Components:
(Enclose Copy of any Proposed Time-Overcurrent Coordination Curves)
Manufacturer: _____ Type: _____ Style/Catalog No.: _____ Proposed Setting: _____

Manufacturer: _____ Type: _____ Style/Catalog No.: _____ Proposed Setting: _____

Manufacturer: _____ Type: _____ Style/Catalog No.: _____ Proposed Setting: _____

Manufacturer: _____ Type: _____ Style/Catalog No.: _____ Proposed Setting: _____

Manufacturer: _____ Type: _____ Style/Catalog No.: _____ Proposed Setting: _____
Current Transformer Data (if applicable):
(Enclose Copy of Manufacturer's Excitation and Ratio Correction Curves)
Manufacturer: _____

Type: _____ Accuracy Class: _____ Proposed Ratio Connection: _____
Manufacturer: _____

Type: _____ Accuracy Class: _____ Proposed Ratio Connection: _____

Potential Transformer Data (if applicable):
Manufacturer: _____

Type: _____ Accuracy Class: _____ Proposed Ratio Connection: _____
Manufacturer: _____

Type: _____ Accuracy Class: _____ Proposed Ratio Connection: _____

General Information

Enclose copy of site electrical one-line diagram showing the configuration of all Generating Facility equipment, current and potential circuits, and protection and control schemes. This one-line diagram must be signed and stamped by a licensed Professional Engineer.

Is One-Line Diagram Enclosed? Yes __ No __
Enclose copy of any site documentation that indicates the precise physical location of the proposed Generating Facility (e.g., USGS topographic map or other diagram or documentation).
Proposed location of protective interface equipment on property (include address if different from the Interconnection Customer's address) _____
_____
Enclose copy of any site documentation that describes and details the operation of the protection and control schemes. Is Available Documentation Enclosed? Yes __ No __
Enclose copies of schematic drawings for all protection and control circuits, relay current circuits, relay potential circuits, and alarm/monitoring circuits (if applicable).
Are Schematic Drawings Enclosed? Yes __ No __

Applicant Signature

I hereby certify that, to the best of my knowledge, all the information provided in this Interconnection Request is true and correct.

For Interconnection Customer: _____ Date:_____

Attachment 3

Certification Codes and Standards

ANSI C84.1-1995 Electric Power Systems and Equipment – Voltage Ratings (60 Hertz)

IEEE 1547, Standard for Interconnecting Distributed Resources with Electric Power Systems (including use of IEEE 1547.1 testing protocols to establish conformity)

IEEE Std 100-2000, IEEE Standard Dictionary of Electrical and Electronic Terms

IEEE Std 519-1992, IEEE Recommended Practices and Requirements for Harmonic Control in Electrical Power Systems

IEEE Std C37.108-1989 (R2002), IEEE Guide for the Protection of Network Transformers

IEEE Std C37.90.1-1989 (R1994), IEEE Standard Surge Withstand Capability (SWC) Tests for Protective Relays and Relay Systems

IEEE Std C37.90.2 (1995), IEEE Standard Withstand Capability of Relay Systems to Radiated Electromagnetic Interference from Transceivers

IEEE Std C57.12.44-2000, IEEE Standard Requirements for Secondary Network Protectors

IEEE Std C62.41.2-2002, IEEE Recommended Practice on Characterization of Surges in Low Voltage (1000V and Less) AC Power Circuits

IEEE Std C62.45-1992 (R2002), IEEE Recommended Practice on Surge Testing for Equipment Connected to Low-Voltage (1000V and Less) AC Power Circuits

NEMA MG 1-1998, Motors and Small Resources, Revision 3

NEMA MG 1-2003 (Rev 2004), Motors and Generators, Revision 1

NFPA 70 (2002), National Electrical Code

UL 1741, Inverters, Converters, Controllers and Interconnection System Equipment for Use With Distributed Energy Resources

Attachment 4

Certification of Generator Equipment Packages

1.0 Generating Facility equipment proposed for use separately or packaged with other equipment in an interconnection system shall be considered certified for interconnected operation if (1) it has been tested in accordance with industry standards for continuous utility interactive operation in compliance with the appropriate codes and standards referenced below by any Nationally Recognized Testing Laboratory (NRTL) recognized by the United States Occupational Safety and Health Administration to test and certify interconnection equipment pursuant to the relevant codes and standards listed in Attachment 3 of the City of Concord Interconnection Procedures, (2) it has been labeled and is publicly listed by such NRTL at the time of the Interconnection Request, and (3) such NRTL makes readily available for verification all test standards and procedures it utilized in performing such equipment certification, and, with consumer approval, the test data itself. The NRTL may make such information available on its website and by encouraging such information to be included in the manufacturer's literature accompanying the equipment.

2.0 The Interconnection Customer must verify that the intended use of the equipment falls within the use or uses for which the equipment was tested, labeled, and listed by the NRTL.

3.0 Certified equipment shall not require further type-test review, testing, or additional equipment to meet the requirements of this interconnection procedure; however, nothing herein shall preclude the need for an on-site commissioning test by the Parties to the interconnection nor follow-up production testing by the NRTL.

4.0 If the certified equipment package includes only interface components (switchgear, inverters, or other interface devices), then an Interconnection Customer must show that the generator or other electric source being utilized with the equipment package is compatible with the equipment package and is consistent with the testing and listing specified for this type of interconnection equipment.

5.0 Provided the generator or electric source, when combined with the equipment package, is within the range of capabilities for which it was tested by the NRTL, and does not violate the interface components' labeling and listing performed by the NRTL, no further design review, testing or additional equipment on the Interconnection Customer's side of the point of common coupling shall be required to meet the requirements of the City of Concord Interconnection Procedures.

6.0 An equipment package does not include equipment provided by the City.

Attachment 5

Application ID No. _____
(For City of Concord use only)

City of Concord
Concord, North Carolina
Application for
Interconnecting a Certified Inverter Based Generating Facility
No Larger than 20 kW for Residential Customers and
No Larger than 100 kW for Non-Residential Customers

This Application is considered complete when it provides all applicable and correct information required below. Additional information to evaluate the Application may be required

Processing Fee: **$100** for Residential
$250 for Non-Residential System

A non-refundable processing fee must accompany this Application.

Interconnection Customer

Name: _____

Contact Person: _____

Address: _____

City: _____

Telephone (Day): _____ (Evening): _____

Fax: _____ E-Mail Address: _____

Contact or Installer (if different from Interconnection Customer)

Name: _____

Contact Person: _____

Address: _____

City: _____

Telephone (Day): _____ (Evening): _____

Fax: _____ E-Mail Address: _____

Owner of the facility_____

Company: _____

Electrical/Contractor License Number(s): _____

Small Generating Facility Information

Location (If different from above): _____

Electric Service By: City of Concord

Account Number: _____ (*If Existing Customer)

Inverter Manufacturer: _____ Model: _____

Nameplate Rating: _____ KW _____ KVA _____ AC Volts

□ Single Phase □ Three Phase

System Design Capacity: _____ KW _____ KVA

Prime Mover: □ Photovoltaic □ Fuel Cell □ Wind Turbine

□ Other (describe) _____

Energy Source: □ Solar

□ Other (describe) _____

Is the equipment UL1741 Listed? □ Yes □ No

If Yes, attach manufacturer's cut-sheet showing UL1741 listing.

Estimated Installation Date: _____

Estimated In-Service Date: _____

List components of the Generating Facility equipment package that are currently certified:

	Equipment Type	Certifying Entity
1.	_____	_____
2.	_____	_____
3.	_____	_____
4.	_____	_____
5.	_____	_____
6.	_____	_____

Interconnection Customer Signature

I hereby certify that, to the best of my knowledge, the information provided in this Application is true. I agree to abide by the Terms and Conditions for Interconnecting an Inverter-Based Generating Facility No Larger than 20 KW for residential customers and no larger than 100 KW for non-residential customers and return the Certificate of Completion when the Small Generating Facility has been installed.

Signed: _____ Date: _____

Title: _____

****

Contingent Approval to Interconnect the Small Generating Facility
(For City of Concord Use Only)

Interconnection of the Small Generating Facility is approved contingent upon the Terms and Conditions for Interconnecting an Inverter-Based Generating Facility No Larger than 20 KW for residential customers and no larger than 100 KW for non-residential customers and return of the Certificate of Completion.

City of Concord
Electric Systems Director Signature: _____ Date_____

Application ID Number: _____

City of Concord waive inspection /witness test? □ Yes □ No

Please complete the form, sign, and mail this form and applicable processing fee to:

City of Concord
Electrical Engineer
P.O. Box 308
Concord, North Carolina 28026-0308
(704) 920-5303

CITY OF CONCORD
Concord, North Carolina

Certificate of Completion for
Certified Renewable Energy Generating System

INTERCONNECTION CUSTOMER ☐ Check if Owner-Installed

Interconnecting Customer: _____

Contact Person: _____

Mailing Address: _____

City: _____ State: _____ Zip: _____

Telephone (Day):_____ (Evening): _____

Fax: _____ E-Mail Address: _____

Location of System

Address: _____

City: _____ State: _____ Zip: _____

****

ELECTRICIAN

Name: _____

Mailing Address: _____

City: _____ State: _____ Zip: _____

Telephone (Day): _____ (Evening): _____

Fax: _____ E-Mail Address: _____

License Number: _____

Date Approval to Install System granted to City of Concord: _____

Application ID Number: _____

****

INSPECTION

The system have been installed and inspected in compliance with the local Building/Electrical Code of:

_____

(Appropriate Governmental Authority)

Signed (Local Electrical Wiring Inspector, or attach signed electrical inspection):

Signature: _____

Name (Printed): _____

Date: _____

****

AS A CONDITION OF INTERCONNECTION YOU ARE REQUIRED TO SEND/FAX A COPY OF THIS FORM ALONG WITH A COPY OF THE SIGNED ELECTRICAL PERMIT TO:

City of Concord
Attn: Electrical Engineer
P.O. Box 308
Concord, North Carolina 28026-0308
Phone: (704) 920-5303
Fax: (704) 792-2552

****

Approval to Energize Facility (For City of Concord use only)

Connection of the System to the City of Concord electric grid is approved contingent upon the terms and conditions of this Agreement:

City of Concord Signature: _____

Name (Printed): _____

Title: _____ Date: _____

Terms and Conditions
for Interconnecting a Certified Inverter-Based
Generating Facility No Larger than 20 kW Residential or
No Larger than 100 kW for Non-Residential

1.0 Construction of the Facility

The Interconnection Customer (Customer) may proceed to construct (including operational testing not to exceed two hours) the Generating Facility when the City approves the Interconnection Request and returns it to the Customer.

2.0 Interconnection and Operation

The Customer may interconnect the Generating Facility with the City's System and operate in parallel with the City's System once all of the following have occurred:

2.1 Upon completing construction, the Customer will cause the Generating Facility to be inspected or otherwise certified by the appropriate local electrical wiring inspector with jurisdiction, and

2.2 The Customer returns the Certificate of Completion to the City, and

2.3 The City has completed its inspection of the Generating Facility to ensure that all equipment has been appropriately installed and that all electrical connections have been made in accordance with applicable codes. All inspections must be conducted by the City, at its own expense, within fifteen Business Days after receipt of the Certificate of Completion and shall take place at a time agreeable to the Parties. The City shall provide a written statement that the Generating Facility has passed inspection or shall notify the Customer of what steps it must take to pass inspection as soon as practicable after the inspection takes place; or

2.4 The City has the right to disconnect the Generating Facility in the event of improper installation or failure to return the Certificate of Completion.

2.5 Revenue quality metering equipment must be installed and tested in accordance with applicable American National Standards Institute (ANSI) standards and all applicable regulatory requirements.

3.0 Safe Operations and Maintenance

The Customer shall be fully responsible to operate, maintain, and repair the Generating Facility as required to ensure that it complies at all times with the interconnection standards to which it has been certified.

4.0 Access

The City shall have access to the disconnect switch (if a disconnect switch is required) and metering equipment of the Generating Facility at all times. The City shall provide reasonable notice to the Customer, when possible, prior to using its right of access.

5.0 Disconnection

The City may temporarily disconnect the Generating Facility upon the following conditions:

5.1 For scheduled outages upon reasonable notice.

5.2 For unscheduled outages or emergency conditions.

5.3 If the Generating Facility does not operate in a manner consistent with these Terms and Conditions.

5.4 The City shall inform the Customer in advance of any scheduled disconnection, or as soon as is reasonable after an unscheduled disconnection.

6.0 Indemnification

The Parties shall at all times indemnify, defend, and save the other Party harmless from, any and all damages, losses, claims, including claims and actions relating to injury to or death of any person or damage to property, demand, suits, recoveries, costs and expenses, court costs, attorney fees, and all other obligations by or to third parties, arising out of or resulting from the other Party's action or inactions of its obligations hereunder on behalf of the indemnifying Party, except in cases of gross negligence or intentional wrongdoing by the indemnified Party.

7. 0 Insurance

All insurance policies must be maintained with insurers authorized to do business in North Carolina. The Parties agree to the following insurance requirements:

7.1 If the Customer is a residential customer of the City, the required coverage shall be a standard homeowner's insurance policy with liability coverage in the amount of at least $100,000 per occurrence.

7.2 If the Customer is a non-residential customer of the City, the required coverage shall be comprehensive general liability insurance with coverage in the amount of at least $300,000 per occurrence.

7.3 The Customer may provide this insurance via a self-insurance program if it has a self-insurance program established in accordance with commercially acceptable risk management practices.

8.0 Limitation of Liability

Each Party's liability to the other Party for any loss, cost, claim, injury, or expense, including reasonable attorney's fees, relating to or arising from any act or omission hereunder, shall be limited to the amount of direct damage actually incurred. In no event shall either Party be liable to the other Party for any indirect, special, incidental, consequential, or punitive damages of any kind.

9.0 Termination

The agreement to interconnect and operate in parallel may be terminated under the following conditions:

9.1 By the Customer

By providing written notice to the City and physically and permanently disconnecting the Generating Facility.

9.2 By the City

If the Generating Facility fails to operate for any consecutive 12-month period or the Customer fails to remedy a violation of these Terms and Conditions.

9.3 Permanent Disconnection

In the event this Agreement is terminated, the City shall have the right to disconnect its facilities or direct the Customer to disconnect its Generating Facility.

9.4 Survival Rights

This Agreement shall continue in effect after termination to the extent necessary to allow or require either Party to fulfill rights or obligations that arose under the Agreement.

10.0 Assignment/Transfer of Ownership of the Facility

10.1 This Agreement shall not survive the transfer of ownership of the Generating Facility to a new owner.

10.2 The new owner must complete and submit a new Interconnection Request agreeing to abide by these Terms and Conditions for interconnection and parallel operations within 20 Business Days of the transfer of ownership. The City shall acknowledge receipt and return a signed copy of the Interconnection Request within ten Business Days.

10.3 The City shall not study or inspect the Generating Facility unless the new owner's Interconnection Request indicates that a Material Modification has occurred or is proposed.

Attachment 6

Feasibility Study Agreement

THIS AGREEMENT ("Agreement") is made and entered into this ____ day of _____ 20___ by and between _____, a _____ organized and existing under the laws of the State of _____, ("Interconnection Customer,") and _____, a _____ existing under the laws of the State of _____, ("City"). The Interconnection Customer and the City each may be referred to as a "Party," or collectively as the "Parties."

RECITALS

WHEREAS, the Interconnection Customer is proposing to develop a Generating Facility or generating capacity addition to an existing Generating Facility consistent with the Interconnection Request completed by the Interconnection Customer on _____; and

WHEREAS, the Interconnection Customer desires to interconnect the Generating Facility with the City's System; and

WHEREAS, the Interconnection Customer has requested the City to perform a feasibility study to assess the feasibility of interconnecting the proposed Generating Facility with the City's System, and of any Affected Systems;

NOW, THEREFORE, in consideration of and subject to the mutual covenants contained herein the Parties agree as follows:

1.0 When used in this Agreement, with initial capitalization, the terms specified shall have the meanings indicated or the meanings specified in the City of Concord Interconnection Procedures.

2.0 The Interconnection Customer elects and the City shall cause to be performed an interconnection feasibility study consistent with the City of Concord Interconnection Procedures.

3.0 The scope of the feasibility study shall be subject to the assumptions set forth in Appendix A to this Agreement.

4.0 The feasibility study shall be based on the technical information provided by the Interconnection Customer in the Interconnection Request, as may be modified as the result of the scoping meeting. The City reserves the right to request additional technical information from the Interconnection Customer as may reasonably become necessary consistent with Good Utility Practice during the course of the feasibility study and as designated in accordance with the City of Concord Interconnection Procedures. If the Interconnection Customer modifies its Interconnection Request, the time to complete the feasibility study may be extended by agreement of the Parties.

5.0 In performing the study, the City shall rely, to the extent reasonably practicable, on existing studies of recent vintage. The Interconnection Customer shall not be charged for

such existing studies; however, the Interconnection Customer shall be responsible for charges associated with any new study or modifications to existing studies that are reasonably necessary to perform the feasibility study.

6.0 The feasibility study report shall provide the following analyses for the purpose of identifying any potential adverse system impacts that would result from the interconnection of the Generating Facility as proposed:

6.1 Initial identification of any circuit breaker short circuit capability limits exceeded as a result of the interconnection;

6.2 Initial identification of any thermal overload or voltage limit violations resulting from the interconnection;

6.3 Initial review of grounding requirements and electric system protection; and

6.4 Description and non-binding estimated cost of facilities required to interconnect the proposed Generating Facility and to address the identified short circuit and power flow issues.

7.0 The feasibility study shall model the impact of the Generating Facility regardless of purpose in order to avoid the further expense and interruption of operation for reexamination of feasibility and impacts if the Interconnection Customer later changes the purpose for which the Generating Facility is being installed.

8.0 The study shall include the feasibility of any interconnection at a proposed project site where there could be multiple potential Points of Interconnection, as requested by the Interconnection Customer and at the Interconnection Customer's cost.

9.0 A deposit of the lesser of 50 percent of good faith estimated feasibility study costs or earnest money of $1,000 may be required from the Interconnection Customer.

10.0 Once the feasibility study is completed, a feasibility study report shall be prepared and transmitted to the Interconnection Customer. Barring unusual circumstances, the feasibility study must be completed and the feasibility study report transmitted within an agreed upon time frame of the Interconnection Customer's agreement to conduct a feasibility study.

11.0 Any study fees shall be based on the City's actual costs and will be invoiced to the Interconnection Customer after the study is completed and delivered and will include a summary of professional time.

12.0 The Interconnection Customer must pay any study costs that exceed the deposit without interest within 30 calendar days of receipt of the invoice or resolution of any dispute. If the deposit exceeds the invoiced fees, the City shall refund such excess within 30 calendar days of the invoice without interest.

13.0 Governing Law, Regulatory Authority, and Rules

The validity, interpretation and enforcement of this Agreement and each of its provisions shall be governed by the laws of the State of North Carolina, without regard to its conflicts of law principles. This Agreement is subject to all Applicable Laws and Regulations. Each Party expressly reserves the right to seek changes in, appeal, or otherwise contest any laws, orders, or regulations of a Governmental Authority.

14.0 Amendment

The Parties may amend this Agreement by a written instrument duly executed by both Parties.

15.0 No Third-Party Beneficiaries

This Agreement is not intended to and does not create rights, remedies, or benefits of any character whatsoever in favor of any persons, corporations, associations, or entities other than the Parties, and the obligations herein assumed are solely for the use and benefit of the Parties, their successors in interest and where permitted, their assigns.

16.0 Waiver

16.1 The failure of a Party to this Agreement to insist, on any occasion, upon strict performance of any provision of this Agreement will not be considered a waiver of any obligation, right, or duty of, or imposed upon, such Party.

16.2 Any waiver at any time by either Party of its rights with respect to this Agreement shall not be deemed a continuing waiver or a waiver with respect to any other failure to comply with any other obligation, right, duty of this Agreement. Termination or default of this Agreement for any reason by Interconnection Customer shall not constitute a waiver of the Interconnection Customer's legal rights to obtain an interconnection from the City. Any waiver of this Agreement shall, if requested, be provided in writing.

17.0 Multiple Counterparts

This Agreement may be executed in two or more counterparts, each of which is deemed an original but all constitute one and the same instrument.

18.0 No Partnership

This Agreement shall not be interpreted or construed to create an association, joint venture, agency relationship, or partnership between the Parties or to impose any partnership obligation or partnership liability upon either Party. Neither Party shall have any right, power or authority to enter into any agreement or undertaking for, or act on behalf of, or to act as or be an agent or representative of, or to otherwise bind, the other

Party.

19.0 Severability

If any provision or portion of this Agreement shall for any reason be held or adjudged to be invalid or illegal or unenforceable by any court of competent jurisdiction or other Governmental Authority, (1) such portion or provision shall be deemed separate and independent, (2) the Parties shall negotiate in good faith to restore insofar as practicable the benefits to each Party that were affected by such ruling, and (3) the remainder of this Agreement shall remain in full force and effect.

20.0 Subcontractors

Nothing in this Agreement shall prevent a Party from utilizing the services of any subcontractor as it deems appropriate to perform its obligations under this Agreement; provided, however, that each Party shall require its subcontractors to comply with all applicable terms and conditions of this Agreement in providing such services and each Party shall remain primarily liable to the other Party for the performance of such subcontractor.

20.1 The creation of any subcontract relationship shall not relieve the hiring Party of any of its obligations under this Agreement. The hiring Party shall be fully responsible to the other Party for the acts or omissions of any subcontractor the hiring Party hires as if no subcontract had been made; provided, however, that in no event shall the City be liable for the actions or inactions of the Interconnection Customer or its subcontractors with respect to obligations of the Interconnection Customer under this Agreement. Any applicable obligation imposed by this Agreement upon the hiring Party shall be equally binding upon, and shall be construed as having application to, any subcontractor of such Party.

20.2 The obligations under this article will not be limited in any way by any limitation of subcontractor's insurance.

21.0 Reservation of Rights

Each Party shall have the right to make a request to the City Manager to modify this Agreement with respect to any terms and conditions, charges, or classifications of service, and each Party shall have the right to protest any such request by the other Party and to participate fully in any proceeding before the City Manager in which such modifications may be considered. Nothing in this Agreement shall limit the rights of the Parties except to the extent that the Parties otherwise agree as provided herein.

IN WITNESS WHEREOF, the Parties have caused this Agreement to be duly executed by their duly authorized officers or agents on the day and year first above written.

City of Concord	**[Insert name of Interconnection Customer]**
_____	_____
Signed _____	Signed _____
Name (Printed):	Name (Printed):
_____	_____
Title _____	Title _____

Appendix A to Feasibility Study

Assumptions Used in Conducting the Feasibility Study

The feasibility study will be based upon the information set forth in the Interconnection Request and agreed upon in the scoping meeting held on _____:

1) Designation of Point of Interconnection and configuration to be studied.

2) Designation of alternative Points of Interconnection and configuration.

1) and 2) are to be completed by the Interconnection Customer. Other assumptions (listed below) are to be provided by the Interconnection Customer and the City.

Attachment 7

System Impact Study Agreement

THIS AGREEMENT ("Agreement") is made and entered into this ____ day of _____ 20___ by and between _____, a _____ organized and existing under the laws of the State of _____, ("Interconnection Customer,") and _____, a _____ existing under the laws of the State of _____, ("City"). The Interconnection Customer and the City each may be referred to as a "Party," or collectively as the "Parties."

RECITALS

WHEREAS, the Interconnection Customer is proposing to develop a Generating Facility or generating capacity addition to an existing Generating Facility consistent with the Interconnection Request completed by the Interconnection Customer on _____; and

WHEREAS, the Interconnection Customer desires to interconnect the Generating Facility with the City's System; and

WHEREAS, the City has completed a feasibility study and provided the results of said study to the Interconnection Customer (this recital to be omitted if the Parties have agreed to forego the feasibility study); and

WHEREAS, the Interconnection Customer has requested the City to perform a system impact study to assess the impact of interconnecting the Generating Facility with the City's System, and of any Affected Systems;

NOW, THEREFORE, in consideration of and subject to the mutual covenants contained herein the Parties agree as follows:

1.0 When used in this Agreement, with initial capitalization, the terms specified shall have the meanings indicated or the meanings specified in the City of Concord Interconnection Procedures.

2.0 The Interconnection Customer elects and the City shall cause to be performed a system impact study consistent with the City of Concord Interconnection Procedures.

3.0 The scope of the system impact study shall be subject to the assumptions set forth in Appendix A to this Agreement.

4.0 A system impact study will be based upon the results of the feasibility study and the technical information provided by Interconnection Customer in the Interconnection Request. The City reserves the right to request additional technical information from the Interconnection Customer as may reasonably become necessary consistent with Good Utility Practice during the course of the system impact study. If the Interconnection Customer modifies its designated Point of Interconnection, Interconnection Request, or the technical information provided therein is modified, the time to complete the system impact study may be extended.

5.0 A system impact study shall consist of a short circuit analysis, a stability analysis, a power flow analysis, voltage drop and flicker studies, protection and set point coordination studies, and grounding reviews, as necessary. A system impact study shall state the assumptions upon which it is based, state the results of the analyses, and provide the requirement or potential impediments to providing the requested interconnection service, including a preliminary indication of the cost and length of time that would be necessary to correct any problems identified in those analyses and implement the interconnection. A system impact study shall provide a list of facilities that are required as a result of the Interconnection Request and non-binding good faith estimates of cost, responsibility and time to construct.

6.0 A distribution system impact study shall incorporate a distribution load flow study, an analysis of equipment interrupting ratings, protection coordination study, voltage drop and flicker studies, protection and set point coordination studies, grounding reviews, and the impact on electric system operation, as necessary.

7.0 Affected Systems may participate in the preparation of a system impact study, with a division of costs among such entities as they may agree. All Affected Systems shall be afforded an opportunity to review and comment upon a system impact study that covers potential adverse system impacts on their electric systems, and the Parties shall agree upon additional time needed to complete a system impact study requiring review by Affected Systems.

8.0 If the City uses a queuing procedure for sorting or prioritizing projects and their associated cost responsibilities for any required Network Upgrades, the system impact study shall consider all generating facilities (and with respect to paragraph 8.3 below, any identified Upgrades associated with such higher queued interconnection) that, on the date the system impact study is commenced –

8.1. Are directly interconnected with the City's electric system; or

8.2. Are interconnected with Affected Systems and may have an impact on the proposed interconnection; and

8.3. Have a pending higher queued Interconnection Request to interconnect with the City's electric system.

9.0 A distribution system impact study, if required, shall be completed and the results transmitted to the Interconnection Customer within an agreed upon time frame after this Agreement is signed by the Parties. A transmission system impact study, if required, shall be completed and the results transmitted to the Interconnection Customer within agreed upon time frame after this Agreement is signed by the Parties, unless the study involves Affected Systems per 7.0.

10.0 A deposit of the equivalent of the good faith estimated cost of a distribution system impact study and the good faith estimated cost of a transmission system impact study may be required from the Interconnection Customer.

11.0 Any study fees shall be based on the City's actual costs and will be invoiced to the Interconnection Customer after the study is completed and delivered and will include a summary of professional time.

12.0 The Interconnection Customer must pay any study costs that exceed the deposit without interest within 30 calendar days of receipt of the invoice or resolution of any dispute. If the deposit exceeds the invoiced fees, the City shall refund such excess within 30 calendar days of the invoice without interest.

13.0 Governing Law, Regulatory Authority, and Rules

The validity, interpretation and enforcement of this Agreement and each of its provisions shall be governed by the laws of the State of North Carolina, without regard to its conflicts of law principles. This Agreement is subject to all Applicable Laws and Regulations. Each Party expressly reserves the right to seek changes in, appeal, or otherwise contest any laws, orders, or regulations of a Governmental Authority.

14.0 Amendment

The Parties may amend this Agreement by a written instrument duly executed by both Parties.

15.0 No Third-Party Beneficiaries

This Agreement is not intended to and does not create rights, remedies, or benefits of any character whatsoever in favor of any persons, corporations, associations, or entities other than the Parties, and the obligations herein assumed are solely for the use and benefit of the Parties, their successors in interest and where permitted, their assigns.

16.0 Waiver

16.1. The failure of a Party to this Agreement to insist, on any occasion, upon strict performance of any provision of this Agreement will not be considered a waiver of any obligation, right, or duty of, or imposed upon, such Party.

16.2. Any waiver at any time by either Party of its rights with respect to this Agreement shall not be deemed a continuing waiver or a waiver with respect to any other failure to comply with any other obligation, right, duty of this Agreement. Termination or default of this Agreement for any reason by Interconnection Customer shall not constitute a waiver of the Interconnection Customer's legal rights to obtain an interconnection from the City. Any waiver of this Agreement shall, if requested, be provided in writing.

17.0 Multiple Counterparts

This Agreement may be executed in two or more counterparts, each of which is deemed an original but all constitute one and the same instrument.

18.0 No Partnership

This Agreement shall not be interpreted or construed to create an association, joint venture, agency relationship, or partnership between the Parties or to impose any partnership obligation or partnership liability upon either Party. Neither Party shall have any right, power or authority to enter into any agreement or undertaking for, or act on behalf of, or to act as or be an agent or representative of, or to otherwise bind, the other Party.

19.0 Severability

If any provision or portion of this Agreement shall for any reason be held or adjudged to be invalid or illegal or unenforceable by any court of competent jurisdiction or other Governmental Authority, (1) such portion or provision shall be deemed separate and independent, (2) the Parties shall negotiate in good faith to restore insofar as practicable the benefits to each Party that were affected by such ruling, and (3) the remainder of this Agreement shall remain in full force and effect.

20.0 Subcontractors

Nothing in this Agreement shall prevent a Party from utilizing the services of any subcontractor as it deems appropriate to perform its obligations under this Agreement; provided, however, that each Party shall require its subcontractors to comply with all applicable terms and conditions of this Agreement in providing such services and each Party shall remain primarily liable to the other Party for the performance of such subcontractor.

20.1. The creation of any subcontract relationship shall not relieve the hiring Party of any of its obligations under this Agreement. The hiring Party shall be fully responsible to the other Party for the acts or omissions of any subcontractor the hiring Party hires as if no subcontract had been made; provided, however, that in no event shall the City be liable for the actions or inactions of the Interconnection Customer or its subcontractors with respect to obligations of the Interconnection Customer under this Agreement. Any applicable obligation imposed by this Agreement upon the hiring Party shall be equally binding upon, and shall be construed as having application to, any subcontractor of such Party.

20.2. The obligations under this article will not be limited in any way by any limitation of subcontractor's insurance.

21.0 Reservation of Rights

Either Party shall have the right to make a request to the City Manager to modify this Agreement with respect to any rates, terms and conditions, charges, or classifications of service, and each Party shall have the right to protest any such request by the other Party

and to participate fully in any proceeding before the City Manager in which such modifications may be considered. Nothing in this Agreement shall limit the rights of the Parties except to the extent that the Parties otherwise agree as provided herein.

IN WITNESS WHEREOF, the Parties have caused this Agreement to be duly executed by their duly authorized officers or agents on the day and year first above written.

City of Concord	**[Insert name of Interconnection Customer]**
_____	_____
Signed _____	Signed _____
Name (Printed):	Name (Printed):
_____	_____
Title _____	Title _____

Appendix A to System Impact Study

Assumptions Used in Conducting the System Impact Study

The system impact study shall be based upon the results of the feasibility study, subject to any modifications in accordance with the Interconnection Procedures, and the following assumptions:

1) Designation of Point of Interconnection and configuration to be studied.

2) Designation of alternative Points of Interconnection and configuration.

1) and 2) are to be completed by the Interconnection Customer. Other assumptions (listed below) are to be provided by the Interconnection Customer and the City.

Attachment 8

Facilities Study Agreement

THIS AGREEMENT ("Agreement") is made and entered into this ____ day of _____ 20___ by and between _____, a _____ organized and existing under the laws of the State of _____, ("Interconnection Customer,") and _____, a _____ existing under the laws of the State of _____, ("City"). The Interconnection Customer and the City each may be referred to as a "Party," or collectively as the "Parties."

RECITALS

WHEREAS, the Interconnection Customer is proposing to develop a Generating Facility or generating capacity addition to an existing Generating Facility consistent with the Interconnection Request completed by the Interconnection Customer on _____; and

WHEREAS, the Interconnection Customer desires to interconnect the Generating Facility with the City's System; and

WHEREAS, the City has completed a system impact study and provided the results of said study to the Interconnection Customer (this recital to be omitted if the Parties have agreed to forego the system impact study); and

WHEREAS, the Interconnection Customer has requested the City to perform a facilities study to specify and estimate the cost of the equipment, engineering, procurement and construction work needed to implement the conclusions of the system impact study and/or any other relevant studies in accordance with Good Utility Practice to physically and electrically connect the Generating Facility with the City's System;

NOW, THEREFORE, in consideration of and subject to the mutual covenants contained herein the Parties agree as follows:

1.0 When used in this Agreement, with initial capitalization, the terms specified shall have the meanings indicated or the meanings specified in the City of Concord Interconnection Procedures.

2.0 The Interconnection Customer elects and the City shall cause to be performed a facilities study consistent with the City of Concord Interconnection Procedures.

3.0 The scope of the facilities study shall be subject to data provided in Appendix A to this Agreement.

4.0 The facilities study shall specify and estimate the cost of the equipment, engineering, procurement and construction work (including overheads) needed to implement the conclusions of the system impact studies. The facilities study shall also identify (1) the electrical switching configuration of the equipment, including, without limitation, transformer, switchgear, meters, and other station equipment, (2) the nature and estimated cost of the City's Interconnection Facilities and Upgrades necessary to accomplish the

interconnection, and (3) an estimate of the time required to complete the construction and installation of such facilities.

5.0 The City may propose to group facilities required for more than one Interconnection Customer in order to minimize facilities costs through economies of scale, but any Interconnection Customer may require the installation of facilities required for its own Generating Facility if it is willing to pay the costs of those facilities.

6.0 A deposit of the good faith estimated facilities study costs may be required from the Interconnection Customer.

7.0 In cases where Upgrades are required, the facilities study must be completed within an agreed upon time frame of the receipt of this Agreement. In cases where no Upgrades are necessary, and the required facilities are limited to Interconnection Facilities, the facilities study must be completed within 45 Business Days.

8.0 Once the facilities study is completed, a facilities study report shall be prepared and transmitted to the Interconnection Customer.

9.0 Any study fees shall be based on the City's actual costs and will be invoiced to the Interconnection Customer after the study is completed and delivered and will include a summary of professional time.

10.0 The Interconnection Customer must pay any study costs that exceed the deposit without interest within 30 calendar days of receipt of the invoice or resolution of any dispute. If the deposit exceeds the invoiced fees, the City shall refund such excess within 30 calendar days of the invoice without interest.

11.0 Governing Law, Regulatory Authority, and Rules

The validity, interpretation and enforcement of this Agreement and each of its provisions shall be governed by the laws of the State of North Carolina, without regard to its conflicts of law principles. This Agreement is subject to all Applicable Laws and Regulations. Each Party expressly reserves the right to seek changes in, appeal, or otherwise contest any laws, orders, or regulations of a Governmental Authority.

12.0 Amendment

The Parties may amend this Agreement by a written instrument duly executed by both Parties.

13.0 No Third-Party Beneficiaries

This Agreement is not intended to and does not create rights, remedies, or benefits of any character whatsoever in favor of any persons, corporations, associations, or entities other than the Parties, and the obligations herein assumed are solely for the use and benefit of the Parties, their successors in interest and where permitted, their assigns.

14.0 Waiver

14.1. The failure of a Party to this Agreement to insist, on any occasion, upon strict performance of any provision of this Agreement will not be considered a waiver of any obligation, right, or duty of, or imposed upon, such Party.

14.2. Any waiver at any time by either Party of its rights with respect to this Agreement shall not be deemed a continuing waiver or a waiver with respect to any other failure to comply with any other obligation, right, duty of this Agreement. Termination or default of this Agreement for any reason by Interconnection Customer shall not constitute a waiver of the Interconnection Customer's legal rights to obtain an interconnection from the City. Any waiver of this Agreement shall, if requested, be provided in writing.

15.0 Multiple Counterparts

This Agreement may be executed in two or more counterparts, each of which is deemed an original but all constitute one and the same instrument.

16.0 No Partnership

This Agreement shall not be interpreted or construed to create an association, joint venture, agency relationship, or partnership between the Parties or to impose any partnership obligation or partnership liability upon either Party. Neither Party shall have any right, power or authority to enter into any agreement or undertaking for, or act on behalf of, or to act as or be an agent or representative of, or to otherwise bind, the other Party.

17.0 Severability

If any provision or portion of this Agreement shall for any reason be held or adjudged to be invalid or illegal or unenforceable by any court of competent jurisdiction or other Governmental Authority, (1) such portion or provision shall be deemed separate and independent, (2) the Parties shall negotiate in good faith to restore insofar as practicable the benefits to each Party that were affected by such ruling, and (3) the remainder of this Agreement shall remain in full force and effect.

18.0 Subcontractors

Nothing in this Agreement shall prevent a Party from utilizing the services of any subcontractor as it deems appropriate to perform its obligations under this Agreement; provided, however, that each Party shall require its subcontractors to comply with all applicable terms and conditions of this Agreement in providing such services and each Party shall remain primarily liable to the other Party for the performance of such subcontractor.

18.1. The creation of any subcontract relationship shall not relieve the hiring Party of any of its obligations under this Agreement. The hiring Party shall be fully responsible to the other Party for the acts or omissions of any subcontractor the hiring Party hires as if no subcontract had been made; provided, however, that in

no event shall the City be liable for the actions or inactions of the Interconnection Customer or its subcontractors with respect to obligations of the Interconnection Customer under this Agreement. Any applicable obligation imposed by this Agreement upon the hiring Party shall be equally binding upon, and shall be construed as having application to, any subcontractor of such Party.

18.2. The obligations under this article will not be limited in any way by any limitation of subcontractor's insurance.

19.0 Reservation of Rights

Each Party shall have the right to make a request to the City Manager to modify this Agreement with respect to any rates, terms and conditions, charges, or classifications of service, and each Party shall have the right to protest any such request by the other Party and to participate fully in any proceeding before the City Manager in which such modifications may be considered. Nothing in this Agreement shall limit the rights of the Parties except to the extent that the Parties otherwise agree as provided herein.

IN WITNESS WHEREOF, the Parties have caused this Agreement to be duly executed by their duly authorized officers or agents on the day and year first above written.

City of Concord	**[Insert name of Interconnection Customer]**
_____	_____
Signed _____	Signed _____
Name (Printed):	Name (Printed):
_____	_____
Title _____	Title _____

Appendix A to Facilities Study Agreement

Data to Be Provided by the Interconnection Customer with the Facilities Study Agreement

Provide location plan and simplified one-line diagram of the plant and station facilities. For staged projects, please indicate future generation, circuits, etc.

On the one-line diagram, indicate the generation capacity attached at each metering location. (Maximum load on CT/PT)

On the one-line diagram, indicate the location of auxiliary power. (Minimum load on CT/PT) Amps

One set of metering is required for each generation connection to the new ring bus or existing Utility station. Number of generation connections: _____

Will an alternate source of auxiliary power be available during CT/PT maintenance?

Yes _____ No _____

Will a transfer bus on the generation side of the metering require that each meter set be designed for the total plant generation? Yes _____ No _____

(Please indicate on the one-line diagram).

What type of control system or PLC will be located at the Generating Facility?

_____

_____

What protocol does the control system or PLC use?

_____

_____

Please provide a 7.5-minute quadrangle map of the site. Indicate the plant, station, distribution line, and property lines.

Physical dimensions of the proposed interconnection station:

_____

Bus length from generation to interconnection station:

_____

Line length from interconnection station to Utility's System.

_____

Tower number observed in the field (Painted on tower leg)*:

_____

Number of third party easements required for lines*:

_____

* To be completed in coordination with the City.

Is the Generating Facility located in City's service area?

Yes _____ No _____ If No, please provide name of local provider:

_____

Please provide the following proposed schedule dates:

Begin Construction	Date: _____
Generator step-up transformers receive back feed power	Date: _____
Generation Testing	Date: _____
Commercial Operation	Date: _____

Attachment 9

CITY OF CONCORD
INTERCONNECTION AGREEMENT

Page No.

This Interconnection Agreement ("Agreement") is made and entered into this ____ day of _____, 20__, by _____ ("City"), and _____ ("Interconnection Customer") each hereinafter sometimes referred to individually as "Party" or both referred to collectively as the "Parties."

City Information

City: _____

Attention: _____

Address: _____

City: _____ State: _____ Zip: _____

Phone: _____ Fax: _____

Interconnection Customer Information

Interconnection Customer: _____

Attention: _____

Address: _____

City: _____ State: _____ Zip: _____

Phone: _____ Fax: _____

Interconnection Request ID No: _____

In consideration of the mutual covenants set forth herein, the Parties agree as follows:

Scope and Limitations of Agreement

Applicability

This Agreement shall be used for all Interconnection Requests submitted under the North Carolina Interconnection Procedures except for those submitted under the Small Inverter Process in Section 2 of the Interconnection Procedures.

Purpose

This Agreement governs the terms and conditions under which the Interconnection Customer's Generating Facility will interconnect with, and operate in parallel with, the City's System.

No Agreement to Purchase or Deliver Power or RECs

This Agreement does not constitute an agreement to purchase or deliver the Interconnection Customer's power or Renewable Energy Certificates (RECs). The purchase or delivery of power, RECs that might result from the operation of the Generating Facility, and other services that the Interconnection Customer may require will be covered under separate agreements, if any. The Interconnection Customer will be responsible for separately making all necessary arrangements (including scheduling) for delivery of electricity with the applicable City.

Limitations

Nothing in this Agreement is intended to affect any other agreement between the City and the Interconnection Customer.

Responsibilities of the Parties

The Parties shall perform all obligations of this Agreement in accordance with all Applicable Laws and Regulations, Operating Requirements, and Good Utility Practice.

The Interconnection Customer shall construct, interconnect, operate and maintain its Generating Facility and construct, operate, and maintain its Interconnection Facilities in accordance with the applicable manufacturer's recommended maintenance schedule, and in accordance with this Agreement, and with Good Utility Practice.

The City shall construct, operate, and maintain its System and Interconnection Facilities in accordance with this Agreement, and with Good Utility Practice.

The Interconnection Customer agrees to construct its facilities or systems in accordance with applicable specifications that meet or exceed those provided by the National Electrical Safety Code, the American National Standards Institute, IEEE, Underwriters' Laboratories, and Operating Requirements in effect at the time of construction and other applicable national and state codes and standards. The Interconnection Customer agrees to design, install, maintain, and operate its Generating Facility so as to reasonably minimize the likelihood of a disturbance adversely affecting or impairing the System or equipment of the City and any Affected Systems.

Each Party shall operate, maintain, repair, and inspect, and shall be fully responsible for the facilities that it now or subsequently may own unless otherwise specified in the Appendices to this Agreement. Each Party shall be responsible for the safe installation, maintenance, repair and condition of their respective lines and appurtenances on their respective sides of the point of change of ownership. The City and the Interconnection Customer, as appropriate, shall provide Interconnection Facilities that adequately protect the City's System, personnel, and other persons from damage and injury. The allocation of responsibility for the design, installation, operation, maintenance and ownership of Interconnection Facilities shall be delineated in the Appendices to this Agreement.

The City shall coordinate with all Affected Systems to support the interconnection.

Parallel Operation Obligations

Once the Generating Facility has been authorized to commence parallel operation, the Interconnection Customer shall abide by all rules and procedures pertaining to the

parallel operation of the Generating Facility in the applicable control area, including, but not limited to: 1) any rules and procedures concerning the operation of generation set forth in approved tariffs or by the applicable system operator(s) for the City's System and; 2) the Operating Requirements set forth in Appendix 5 of this Agreement.

Metering

The Interconnection Customer shall be responsible for the City's reasonable and necessary cost for the purchase, installation, operation, maintenance, testing, repair, and replacement of metering and data acquisition equipment specified in Appendices 2 and 3 of this Agreement. The Interconnection Customer's metering (and data acquisition, as required) equipment shall conform to applicable industry rules and Operating Requirements.

Reactive Power

The Interconnection Customer shall design its Generating Facility to maintain a composite power delivery at continuous rated power output at the Point of Interconnection at a power factor within the range of 0.95 leading to 0.95 lagging, unless the City has established different requirements that apply to all similarly situated generators in the control area on a comparable basis. The requirements of this paragraph shall not apply to wind generators.

The City is required to pay the Interconnection Customer for reactive power that the Interconnection Customer provides or absorbs from the Generating Facility when the City requests the Interconnection Customer to operate its Generating Facility outside the range specified in Article 1.8.1. In addition, if the City pays its own or affiliated generators for reactive power service within the specified range, it must also pay the Interconnection Customer.

Payments shall be in accordance with the City's applicable rate schedule then in effect unless the provision of such service(s) is subject to a regional transmission organization or independent system operator FERC-approved rate schedule. To the extent that no rate schedule is in effect at the time the Interconnection Customer is required to provide or absorb reactive power under this Agreement, the Parties agree to expeditiously file such rate schedule and agree to support any request for waiver of any prior notice requirement in order to compensate the Interconnection Customer from the time service commenced.

Capitalized Terms

Capitalized terms used herein shall have the meanings specified in the Glossary of Terms in Attachment 1 of the City of Concord Interconnection Procedures or the body of this Agreement.

Inspection, Testing, Authorization, and Right of Access

Equipment Testing and Inspection

The Interconnection Customer shall test and inspect its Generating Facility and Interconnection Facilities prior to interconnection. The Interconnection Customer shall notify the City of such activities in a mutually agreeable timeframe prior to such testing and inspection. Testing and inspection shall occur on a Business Day, unless otherwise agreed to by the Parties. The City may, at its own expense, send qualified personnel to the Generating

Facility site to inspect the interconnection and observe the testing. The Interconnection Customer shall provide the City a written test report when such testing and inspection is completed.

The City shall provide the Interconnection Customer written acknowledgment that it has received the Interconnection Customer's written test report. Such written acknowledgment shall not be deemed to be or construed as any representation, assurance, guarantee, or warranty by the City of the safety, durability, suitability, or reliability of the Generating Facility or any associated control, protective, and safety devices owned or controlled by the Interconnection Customer or the quality of power produced by the Generating Facility.

Authorization Required Prior to Parallel Operation

The City shall use Reasonable Efforts to list applicable parallel operation requirements in Appendix 5 of this Agreement. Additionally, the City shall notify the Interconnection Customer of any changes to these requirements as soon as they are known. The City shall make Reasonable Efforts to cooperate with the Interconnection Customer in meeting requirements necessary for the Interconnection Customer to commence parallel operations by the in-service date.

The Interconnection Customer shall not operate its Generating Facility in parallel with the City's System without prior written authorization of the City. The City will provide such authorization once the City receives notification that the Interconnection Customer has complied with all applicable parallel operation requirements. Such authorization shall not be unreasonably withheld, conditioned, or delayed.

Right of Access

Upon reasonable notice, the City may send a qualified person to the premises of the Interconnection Customer at or immediately before the time the Generating Facility first produces energy to inspect the interconnection, and observe the commissioning of the Generating Facility (including any required testing), startup, and operation for a period of up to three Business Days after initial start-up of the unit. In addition, the Interconnection Customer shall notify the City at least five Business Days prior to conducting any on-site verification testing of the Generating Facility.

Following the initial inspection process described above, at reasonable hours, and upon reasonable notice, or at any time without notice in the event of an emergency or hazardous condition, the City shall have access to the Interconnection Customer's premises for any reasonable purpose in connection with the performance of the obligations imposed on it by this Agreement or if necessary to meet its legal obligation to provide service to its customers.

Each Party shall be responsible for its own costs associated with following this Article.

Effective Date, Term, Termination, and Disconnection

Effective Date

This Agreement shall become effective upon execution by the Parties.

Term of Agreement

This Agreement shall become effective on the Effective Date and shall remain in effect for a period as agreed upon by the Parties and shall be automatically renewed for each successive one-year period thereafter, unless terminated earlier in accordance with Article 3.3 of this Agreement.

Termination

No termination shall become effective until the Parties have complied with all Applicable Laws and Regulations applicable to such termination.

The Interconnection Customer may terminate this Agreement at any time by giving the City 60 Business Days written notice and physically and permanently disconnecting the Generating Facility from the City's System.

Either Party may terminate this Agreement after Default pursuant to Article 7.6.

Upon termination of this Agreement, the Generating Facility will be disconnected from the City's System. All costs required to effectuate such disconnection shall be borne by the terminating Party, unless such termination resulted from the non-terminating Party's Default of this Agreement or such non-terminating Party otherwise is responsible for these costs under this Agreement.

The termination of this Agreement shall not relieve either Party of its liabilities and obligations, owed or continuing at the time of the termination.

The provisions of this article shall survive termination or expiration of this Agreement.

Temporary Disconnection

Temporary disconnection shall continue only for so long as reasonably necessary under Good Utility Practice.

Emergency Conditions

"Emergency Condition" shall mean a condition or situation: (1) that in the judgment of the Party making the claim is imminently likely to endanger life or property; or (2) that, in the case of the City, is imminently likely (as determined in a non-discriminatory manner) to cause a material adverse effect on the security of, or damage to the City's System, the City's Interconnection Facilities or the systems of others to which the City's System is directly connected; or (3) that, in the case of the Interconnection Customer, is imminently likely (as determined in a non-discriminatory manner) to cause a material adverse effect on the security of, or damage to, the Generating Facility or the Interconnection Customer's Interconnection Facilities. Under Emergency Conditions, the City may immediately suspend interconnection service and temporarily disconnect the Generating Facility. The City shall notify the Interconnection Customer promptly when it becomes aware of an Emergency Condition that may reasonably be expected to affect the Interconnection Customer's operation of the Generating Facility. The

Interconnection Customer shall notify the City promptly when it becomes aware of an Emergency Condition that may reasonably be expected to affect the City's System or any Affected Systems. To the extent information is known, the notification shall describe the Emergency Condition, the extent of the damage or deficiency, the expected effect on the operation of both Parties' facilities and operations, its anticipated duration, and the necessary corrective action.

Routine Maintenance, Construction, and Repair

The City may interrupt interconnection service or curtail the output of the Generating Facility and temporarily disconnect the Generating Facility from the City's System when necessary for routine maintenance, construction, and repairs on the City's System. The City shall provide the Interconnection Customer with notice prior to such interruption. The City shall use Reasonable Efforts to coordinate such reduction or temporary disconnection with the Interconnection Customer.

Forced Outages

During any forced outage, the City may suspend interconnection service to effect immediate repairs on the City's System. The City shall use Reasonable Efforts to provide the Interconnection Customer with prior notice. If prior notice is not given, the City shall, upon request, provide the Interconnection Customer written documentation after the fact explaining the circumstances of the disconnection.

Adverse Operating Effects

The City shall notify the Interconnection Customer as soon as practicable if, based on Good Utility Practice, operation of the Generating Facility may cause disruption or deterioration of service to other customers served from the same electric system, or if operating the Generating Facility could cause damage to the City's System or Affected Systems. Supporting documentation used to reach the decision to disconnect shall be provided to the Interconnection Customer upon request. If, after notice, the Interconnection Customer fails to remedy the adverse operating effect within a reasonable time, the City may disconnect the Generating Facility. The City shall provide the Interconnection Customer with notice of such disconnection, unless the provisions of Article 3.4.1 apply.

Modification of the Generating Facility

The Interconnection Customer must receive written authorization from the City before making any change to the Generating Facility that may have a material impact on the safety or reliability of the City's System. Such authorization shall not be unreasonably withheld. Modifications shall be done in accordance with Good Utility Practice. If the Interconnection Customer makes such modification without the City's prior written authorization, the latter shall have the right to temporarily disconnect the Generating Facility.

Reconnection

The Parties shall cooperate with each other to restore the Generating Facility, Interconnection Facilities, and the City's System to their normal operating state as soon as reasonably practicable following a temporary or emergency disconnection.

Cost Responsibility for Interconnection Facilities and Distribution Upgrades

Interconnection Facilities

The Interconnection Customer shall pay for the cost of the Interconnection Facilities itemized in Appendix 2 of this Agreement. The City shall provide a best estimate cost, including overheads, for the purchase and construction of its Interconnection Facilities and provide a detailed itemization of such costs. Costs associated with Interconnection Facilities may be shared with other entities that may benefit from such facilities by agreement of the Interconnection Customer, such other entities, and the City.

The Interconnection Customer shall be responsible for its share of all reasonable expenses, including overheads, associated with (1) owning, operating, maintaining, repairing, and replacing its own Interconnection Facilities, and (2) operating, maintaining, repairing, and replacing the City's Interconnection Facilities.

Distribution Upgrades

The City shall design, procure, construct, install, and own the Distribution Upgrades described in Appendix 6 of this Agreement. The actual cost of the Distribution Upgrades, including overheads, shall be directly assigned to the Interconnection Customer.

Cost Responsibility for Network Upgrades

Applicability

No portion of this Article 5 shall apply unless the interconnection of the Generating Facility requires Network Upgrades.

Network Upgrades

The City shall design, procure, construct, install, and own the Network Upgrades described in Appendix 6 of this Agreement. If the City and the Interconnection Customer agree, the Interconnection Customer may construct Network Upgrades that are located on land owned by the Interconnection Customer. Unless the City elects to pay for Network Upgrades, the actual cost of the Network Upgrades, including overheads, shall be borne by the Interconnection Customer.

Billing, Payment, Milestones, and Financial Security

Billing and Payment Procedures and Final Accounting

The City shall bill the Interconnection Customer for the design, engineering, construction, and procurement costs of Interconnection Facilities and Upgrades contemplated by this Agreement in accordance with City Policy (See Appendix 2). The Interconnection Customer shall pay each bill within 30 calendar days of receipt.

Milestones

The Parties shall agree on milestones for which each Party is responsible and list them in Appendix 4 of this Agreement. A Party's obligations under this provision may be extended by agreement. If a Party anticipates that it will be unable to meet a milestone for any reason other than a Force Majeure Event, it shall immediately notify the other Party of the reason(s) for not meeting the milestone and (1) propose the earliest reasonable alternate date by which it can attain this and future milestones, and (2) request appropriate amendments to Appendix 4. The Party affected by the failure to meet a milestone shall not unreasonably withhold agreement to such an amendment unless (1) it will suffer significant uncompensated economic or operational harm from the delay, (2) attainment of the same milestone has previously been delayed, or (3) it has reason to believe that the delay in meeting the milestone is intentional or unwarranted notwithstanding the circumstances explained by the Party proposing the amendment.

Financial Security Arrangements

At least 30 Calendar Days prior to the commencement of the design, procurement, installation, or construction of a discrete portion of the City's Interconnection Facilities and Upgrades, the Interconnection Customer shall provide the City, at the Interconnection Customer's option a surety bond, letter of credit or cash escrow that is reasonably acceptable to the City and is consistent with the Uniform Commercial Code of North Carolina. Such security for payment shall be in an amount sufficient to cover the costs for constructing, designing, procuring, and installing the applicable portion of the City's Interconnection Facilities and Upgrades and shall be reduced on a dollar-for-dollar basis for payments made to the City under this Agreement during its term. In addition:

The guarantee must be made by an entity that meets the creditworthiness requirements of the City, and contain terms and conditions that guarantee payment of any amount that may be due from the Interconnection Customer, up to an agreed-to maximum amount.

The letter of credit or surety bond must be issued by a financial institution or insurer reasonably acceptable to the City and licensed under the laws of North Carolina and must specify a reasonable expiration date.

The City may waive the security requirements if its credit policies show that the financial risks involved are de minimus, or if the City's policies allow the acceptance of an alternative showing of credit-worthiness from the Interconnection Customer.

Assignment, Liability, Indemnity, Force Majeure, Consequential Damages, and Default

Assignment

This Agreement shall not survive the transfer of ownership of the Generating Facility to a new owner. The new owner must complete a new Interconnection Request and submit it to the City within 30 Calendar Days of the transfer of ownership or the City's Interconnection Facilities shall be removed or disabled and the Generating Facility disconnected from the City's System. The City shall not study or inspect the Generating Facility unless the new owner's Interconnection Request indicates that a Material Modification has occurred or is proposed.

The Interconnection Customer shall have the right to assign this Agreement, without the consent of the City, for collateral security purposes to aid in providing financing for the Generating Facility, provided that the Interconnection Customer will promptly notify the City of any such assignment. Assignment shall not relieve a Party of its obligations, nor shall a Party's obligations be enlarged, in whole or in part, by reason thereof.

Any attempted assignment that violates this article is void and ineffective.

Limitation of Liability

Each Party's liability to the other Party for any loss, cost, claim, injury, liability, or expense, including reasonable attorney's fees, relating to or arising from any act or omission in its performance of this Agreement, shall be limited to the amount of direct damage actually incurred. In no event shall either Party be liable to the other Party for any indirect, special, incidental, consequential, or punitive damages of any kind, except as authorized by this Agreement.

Indemnity

This provision protects each Party from liability incurred to third parties as a result of carrying out the provisions of this Agreement. Liability under this provision is exempt from the general limitations on liability found in Article 7.2.

The Parties shall at all times indemnify, defend, and save the other Party harmless from, any and all damages, losses, claims, including claims and actions relating to injury to or death of any person or damage to property, demand, suits, recoveries, costs and expenses, court costs, attorney fees, and all other obligations by or to third parties, arising out of or resulting from the other Party's action or inaction of its obligations under this Agreement on behalf of the indemnifying Party, except in cases of gross negligence or intentional wrongdoing by the indemnified Party.

If an indemnified Party is entitled to indemnification under this Article as a result of a claim by a third party, and the indemnifying Party fails, after notice and reasonable opportunity to proceed under this Article, to assume the defense of such claim, such indemnified Party may at the expense of the indemnifying Party contest, settle or consent to the entry of any judgment with respect to, or pay in full, such claim.

If an indemnifying Party is obligated to indemnify and hold any indemnified Party harmless under this Article, the amount owing to the indemnified Party shall be the amount of such indemnified Party's actual loss, net of any insurance or other recovery.

Promptly after receipt by an indemnified Party of any claim or notice of the commencement of any action or administrative or legal proceeding or investigation as to which the indemnity provided for in this Article may apply, the indemnified Party shall notify the indemnifying Party of such fact. Any failure of or delay in such notification shall not affect a Party's indemnification obligation unless such failure or delay is materially prejudicial to the indemnifying Party.

Consequential Damages

Other than as expressly provided for in this Agreement, neither Party shall be liable under any provision of this Agreement for any losses, damages, costs or expenses for any

special, indirect, incidental, consequential, or punitive damages, including but not limited to loss of profit or revenue, loss of the use of equipment, cost of capital, cost of temporary equipment or services, whether based in whole or in part in contract, in tort, including negligence, strict liability, or any other theory of liability; provided, however, that damages for which a Party may be liable to the other Party under another agreement will not be considered to be special, indirect, incidental, or consequential damages hereunder.

Force Majeure

As used in this article, a Force Majeure Event shall mean any act of God, labor disturbance, act of the public enemy, war, insurrection, riot, fire, storm or flood, explosion, breakage or accident to machinery or equipment, any order, regulation or restriction imposed by governmental, military or lawfully established civilian authorities, or any other cause beyond a Party's control. A Force Majeure Event does not include an act of negligence or intentional wrongdoing.

If a Force Majeure Event prevents a Party from fulfilling any obligations under this Agreement, the Party affected by the Force Majeure Event (Affected Party) shall promptly notify the other Party, either in writing or via the telephone, of the existence of the Force Majeure Event. The notification must specify in reasonable detail the circumstances of the Force Majeure Event, its expected duration, and the steps that the Affected Party is taking to mitigate the effects of the event on its performance. The Affected Party shall keep the other Party informed on a continuing basis of developments relating to the Force Majeure Event until the event ends. The Affected Party will be entitled to suspend or modify its performance of obligations under this Agreement (other than the obligation to make payments) only to the extent that the effect of the Force Majeure Event cannot be mitigated by the use of Reasonable Efforts. The Affected Party will use Reasonable Efforts to resume its performance as soon as possible.

Default

No Default shall exist where such failure to discharge an obligation (other than the payment of money) is the result of a Force Majeure Event as defined in this Agreement or the result of an act or omission of the other Party. Upon a Default, the non-defaulting Party shall give written notice of such Default to the defaulting Party. Except as provided in Article 7.6.2, the defaulting Party shall have 60 calendar days from receipt of the Default notice within which to cure such Default; provided however, if such Default is not capable of cure within 60 calendar days, the defaulting Party shall commence such cure within 20 calendar days after notice and continuously and diligently complete such cure within six months from receipt of the Default notice; and, if cured within such time, the Default specified in such notice shall cease to exist.

If a Default is not cured as provided in this Article, or if a Default is not capable of being cured within the period provided for herein, the non-defaulting Party shall have the right to terminate this Agreement by written notice, and be relieved of any further obligation hereunder and, whether or not that Party terminates this Agreement, to recover from the defaulting Party all amounts due hereunder, plus all other damages and remedies to which it is entitled at law or in equity. The provisions of this article will survive termination of this Agreement.

Insurance

8.1 The Interconnection Customer shall obtain and retain, for as long as the Generating

Facility is interconnected with the City's System, liability insurance which protects the Interconnection Customer from claims for bodily injury and/or property damage. The amount of such insurance shall be sufficient to insure against all reasonably foreseeable direct liabilities given the size and nature of the generating equipment being interconnected, the interconnection itself, and the characteristics of the system to which the interconnection is made. This insurance shall be primary for all purposes. The Interconnection Customer shall provide certificates evidencing this coverage as required by the City. Such insurance shall be obtained from an insurance provider authorized to do business in North Carolina. The City reserves the right to refuse to establish or continue the interconnection of the Generating Facility with the City's System, if such insurance is not in effect.

For an Interconnection Customer that is a residential customer of the City proposing to interconnect a Generating Facility no larger than 20 kW, the required coverage shall be a standard homeowner's insurance policy with liability coverage in the amount of at least $100,000 per occurrence.

For an Interconnection Customer that is a non-residential customer of the City proposing to interconnect a Generating Facility no larger than 250 kW, the required coverage shall be comprehensive general liability insurance with coverage in the amount of at least $300,000 per occurrence.

An Interconnection Customer of sufficient credit-worthiness may propose to provide this insurance via a self-insurance program if it has a self-insurance program established in accordance with commercially acceptable risk management practices, and such a proposal shall not be unreasonably rejected.

8.2 The City agrees to maintain general liability insurance or self-insurance consistent with the City's commercial practice. Such insurance or self-insurance shall not exclude coverage for the City's liabilities undertaken pursuant to this Agreement.

8.3 The Parties further agree to notify each other whenever an accident or incident occurs resulting in any injuries or damages that are included within the scope of coverage of such insurance, whether or not such coverage is sought.

Confidentiality

9.1 Confidential Information shall mean any confidential and/or proprietary information provided by one Party to the other Party that meets the requirements of the North Carolina Public Records Laws including but not limited to N.C.G.S. Sec. 132-1.2.

9.2 Confidential Information does not include information previously in the public domain, required to be publicly submitted or divulged by Governmental Authorities, or necessary to be divulged in an action to enforce these procedures. Each Party receiving Confidential Information shall hold such information in confidence and shall not disclose it to any third party nor to the public without the prior written authorization from the Party providing that information, except to fulfill obligations under these procedures, or to fulfill legal or regulatory requirements.

Each Party shall employ at least the same standard of care to protect Confidential Information obtained from the other Party as it employs to protect its own Confidential Information.

Each Party is entitled to equitable relief, by injunction or otherwise, to enforce its rights under this provision to prevent the release of Confidential Information without bond or proof of

damages, and may seek other remedies available at law or in equity for breach of this provision.

9.3 If information is requested by the Commission from one of the Parties that is otherwise required to be maintained in confidence pursuant to this Agreement, the Party shall provide the requested information to the Commission within the time provided for in the request for information. In providing the information to the Commission, the Party may request that the information be treated as confidential and non-public in accordance with North Carolina law and that the information be withheld from public disclosure.

Disputes

10.1 The Parties agree to attempt to resolve all disputes arising out of the interconnection process according to the provisions of this Article.

10.2 In the event of a dispute, either Party shall provide the other Party with a written notice of dispute. Such notice shall describe in detail the nature of the dispute.

10.3 If the dispute has not been resolved within two Business Days after receipt of the notice, either Party may contact the Office of the City Manager for assistance in resolving the dispute.

10.4 Each Party agrees to conduct all negotiations in good faith.

Taxes

11.1 The Parties agree to follow all applicable tax laws and regulations, consistent with North Carolina and federal policy and revenue requirements.

11.2 Each Party shall cooperate with the other to maintain the other Party's tax status. Nothing in this Agreement is intended to adversely affect the City's tax exempt status with respect to the issuance of bonds including, but not limited to, local furnishing bonds.

Miscellaneous

Governing Law, Regulatory Authority, and Rules

The validity, interpretation and enforcement of this Agreement and each of its provisions shall be governed by the laws of the State of North Carolina, without regard to its conflicts of law principles. This Agreement is subject to all Applicable Laws and Regulations. Each Party expressly reserves the right to seek changes in, appeal, or otherwise contest any laws, orders, or regulations of a Governmental Authority.

Amendment

The Parties may amend this Agreement by a written instrument duly executed by both Parties, or under Article 12.12 of this Agreement.

No Third-Party Beneficiaries

This Agreement is not intended to and does not create rights, remedies, or benefits of any character whatsoever in favor of any persons, corporations, associations, or entities other than the Parties, and the obligations herein assumed are solely for the use and benefit of the Parties, their successors in interest and where permitted, their assigns.

Waiver

The failure of a Party to this Agreement to insist, on any occasion, upon strict performance of any provision of this Agreement will not be considered a waiver of any obligation, right, or duty of, or imposed upon, such Party.

Any waiver at any time by either Party of its rights with respect to this Agreement shall not be deemed a continuing waiver or a waiver with respect to any other failure to comply with any other obligation, right, duty of this Agreement. Termination or default of this Agreement for any reason by Interconnection Customer shall not constitute a waiver of the Interconnection Customer's legal rights to obtain an interconnection from the City. Any waiver of this Agreement shall, if requested, be provided in writing.

Entire Agreement

This Agreement, including all Appendices, constitutes the entire agreement between the Parties with reference to the subject matter hereof, and supersedes all prior and contemporaneous understandings or agreements, oral or written, between the Parties with respect to the subject matter of this Agreement. There are no other agreements, representations, warranties, or covenants which constitute any part of the consideration for, or any condition to, either Party's compliance with its obligations under this Agreement.

Multiple Counterparts

This Agreement may be executed in two or more counterparts, each of which is deemed an original but all constitute one and the same instrument.

No Partnership

This Agreement shall not be interpreted or construed to create an association, joint venture, agency relationship, or partnership between the Parties or to impose any partnership obligation or partnership liability upon either Party. Neither Party shall have any right, power or authority to enter into any agreement or undertaking for, or act on behalf of, or to act as or be an agent or representative of, or to otherwise bind, the other Party.

Severability

If any provision or portion of this Agreement shall for any reason be held or adjudged to be invalid or illegal or unenforceable by any court of competent jurisdiction or other Governmental Authority, (1) such portion or provision shall be deemed separate and independent, (2) the Parties shall negotiate in good faith to restore insofar as practicable the benefits to each Party that were affected by such ruling, and (3) the remainder of this Agreement shall remain in full force and effect.

Security Arrangements

Infrastructure security of electric system equipment and operations and control hardware and software is essential to ensure day-to-day reliability and operational security. All Utilities are expected to meet basic standards for electric system infrastructure and operational security, including physical, operational, and cyber-security practices.

Environmental Releases

Each Party shall notify the other Party, first orally and then in writing, of the release of any hazardous substances, any asbestos or lead abatement activities, or any type of remediation activities related to the Generating Facility or the Interconnection Facilities, each of which may reasonably be expected to affect the other Party. The notifying Party shall (1) provide the notice as soon as practicable, provided such Party makes a good faith effort to provide the notice no later than 24 hours after such Party becomes aware of the occurrence, and (2) promptly furnish to the other Party copies of any publicly available reports filed with any Governmental Authorities addressing such events.

Subcontractors

Nothing in this Agreement shall prevent a Party from utilizing the services of any subcontractor as it deems appropriate to perform its obligations under this Agreement; provided, however, that each Party shall require its subcontractors to comply with all applicable terms and conditions of this Agreement in providing such services and each Party shall remain primarily liable to the other Party for the performance of such subcontractor.

The creation of any subcontract relationship shall not relieve the hiring Party of any of its obligations under this Agreement. The hiring Party shall be fully responsible to the other Party for the acts or omissions of any subcontractor the hiring Party hires as if no subcontract had been made; provided, however, that in no event shall the City be liable for the actions or inactions of the Interconnection Customer or its subcontractors with respect to obligations of the Interconnection Customer under this Agreement. Any applicable obligation imposed by this Agreement upon the hiring Party shall be equally binding upon, and shall be construed as having application to, any subcontractor of such Party.

The obligations under this article will not be limited in any way by any limitation of subcontractor's insurance.

Reservation of Rights

Each Party shall have the right to make a request to the City Manager to modify this Agreement with respect to any rates, terms and conditions, charges, or classifications of service, and each Party shall have the right to protest any such filing by the other Party and to participate fully in any proceeding before the City Manager in which such modifications may be considered. Nothing in this Agreement shall limit the rights of the Parties except to the extent that the Parties otherwise agree as provided herein.

Notices

General

Unless otherwise provided in this Agreement, any written notice, demand, or request required or authorized in connection with this Agreement (Notice) shall be deemed properly given if delivered in person, delivered by recognized national courier service, or sent by first class mail, postage prepaid, to the person specified as follows:

If to the Interconnection Customer:

Interconnection Customer: _____

Attention: _____

Address: _____

City: _____ State: _____ Zip: _____

Phone: _____ Fax: _____

If to the City:

City: _____

Attention: _____

Address: _____

City: _____ State: _____ Zip: _____

Phone: _____ Fax: _____

Billing and Payment

Billings and payments shall be sent to the addresses set out below:
If to the Interconnection Customer:
Interconnection Customer: _____
Attention: _____
Address: _____
City: _____ State: _____ Zip: _____
If to the City:
City: _____
Attention: _____
Address: _____
City: _____ State: _____ Zip: _____

Alternative Forms of Notice

Any notice or request required or permitted to be given by either Party to the other and not required by this Agreement to be given in writing may be so given by telephone, facsimile or e-mail to the telephone numbers and e-mail addresses set out below:
If to the Interconnection Customer:
Interconnection Customer: _____
Attention: _____
Address: _____
City: _____ State: _____ Zip: _____
Phone: _____ Fax: _____
E-Mail Address: _____
If to the City:
City: _____
Attention: _____
Address: _____
City: _____ State: _____ Zip: _____
Phone: _____ Fax: _____
E-Mail Address: _____

Designated Operating Representative

The Parties may also designate operating representatives to conduct the communications which may be necessary or convenient for the administration of this Agreement. This person will also serve as the point of contact with respect to operations and maintenance of the Party's facilities.
Interconnection Customer's Operating Representative:
Interconnection Customer: _____
Attention: _____
Address: _____
City: _____ State: _____ Zip: _____
Phone: _____ Fax: _____
E-Mail Address: _____

City's Operating Representative:

City: _____

Attention: _____

Address: _____

City: _____ State: _____ Zip: _____

Phone: _____ Fax: _____

E-Mail Address: _____

Changes to the Notice Information

Either Party may change this information by giving five Business Days written notice prior to the effective date of the change.

IN WITNESS WHEREOF, the Parties have caused this Agreement to be executed by their respective duly authorized representatives.

For the City

Name: _____

Title: _____

Date: _____

For the Interconnection Customer

Name: _____

Title: _____

Date: _____
Notary: _____

County:_____

Commission Expires: _____

Appendix 1 to Interconnection Agreement

Glossary of Terms

See Glossary of Terms, Attachment 1 to the City of Concord Interconnection Procedures.

Appendix 2 to Interconnection Agreement

Description and Costs of the Generating Facility, Interconnection Facilities, and Metering Equipment

Equipment, including the Generating Facility, Interconnection Facilities, and metering equipment shall be itemized and identified as being owned by the Interconnection Customer, or the City. The City will provide a best estimate itemized cost, including overheads, of its Interconnection Facilities and metering equipment, and a best estimate itemized cost of the annual operation and maintenance expenses associated with its Interconnection Facilities and metering equipment.

Appendix 3 to Interconnection Agreement

One-line Diagram Depicting the Generating Facility, Interconnection Facilities, Metering Equipment, and Upgrades

Appendix 4 to Interconnection Agreement

Milestones

In-Service Date: _____

Critical milestones and responsibility as agreed to by the Parties:

	Milestone/Date	Responsible Party
(1)	_____	_____
(2)	_____	_____
(3)	_____	_____
(4)	_____	_____
(5)	_____	_____
(6)	_____	_____
(7)	_____	_____
(8)	_____	_____
(9)	_____	_____
(10)	_____	_____

Agreed to by:

For the City _____ Date _____

For the Interconnection Customer _____ Date _____

Appendix 5 to Interconnection Agreement

Additional Operating Requirements for the City's System and Affected Systems Needed to Support the Interconnection Customer's Needs

The City shall also provide requirements that must be met by the Interconnection Customer prior to initiating parallel operation with the City's System.

Appendix 6 to Interconnection Agreement

City's Description of its Upgrades and Best Estimate of Upgrade Costs

The City shall describe Upgrades and provide an itemized best estimate of the cost, including overheads, of the Upgrades and annual operation and maintenance expenses associated with such Upgrades. The City shall functionalize Upgrade costs and annual expenses as either transmission or distribution related.

15.0 Deviations from the City's Technical Standards

All connections to the City's electric system must be constructed in conformance with City standards and specifications. If any conflicts arise between a City and North Carolina standard, the more restrictive standard will apply. The Director of Electric Systems, in consultation with other relevant agencies may allow modifications to the design criteria.

15.1. Modifications to the design criteria:

a. Must be based on sound engineering principles and practices,

b. Must not create an unsafe or hazardous situation,

c. Must be equivalent to the efficiency, functionality, durability, structural integrity, and long-term maintenance of the minimum criteria in this article.

15.2. The Director of Electric Systems is authorized to require studies or other pertinent information to help support or justify the modification.

City of Concord
Technical Standards Manual

Article VII
Landscaping

Species Selection, Installation, and Maintenance Specifications

Concord
NORTH CAROLINA
High Performance Living

TABLE OF CONTENTS

Article VI

LIST OF TABLES

LIST OF FIGURES

1.0 Introduction

The City of Concord requires planting yards in accordance with the City's development ordinances. This Manual provides detailed specifications for plant species selection, installation, and maintenance.

2.0 Plant Materials

2.1. **Size**. The minimum allowable plant size for new installations is provided below. Due to the biological variations between species, the caliper or height necessary for newly installed plant materials may vary. See Figure 1 for a pictorial representation of common tree terms. As a general rule, the caliper or diameter of trees must be measured a vertical distance of 6 inches from the ground for a tree with a 4-inch caliper or less diameter and measured 12 inches from the ground for a tree with a 4-inch caliper or greater diameter. Shrubs must be at least 24 inches high as measured vertically from the ground to the densest portion of the top of the shrub or hedge. See Figure 2.

a. *Shade Trees*. At the time of planting, shade trees must have a minimum caliper of 2 to 2½ inches and a minimum height of 10 to 12 feet.

b. *Ornamental Trees*. Ornamental trees must have a minimum caliper of 1½ to 2 inches for single-stem trees or 1 to 1½ inches for multi-stem trees, and a minimum height of 6 to 8 feet at the time of planting.

c. *Large Shrubs*. Large shrubs, normally planted for screening, must have a minimum height of 3 to 3½ feet at the time of planting. Shrubs planted for screening purposes shall form the required density to block visibility within three (3) years from the date of installation.

d. *Small Shrubs*. Small shrubs must have a minimum spread and/or height of 18 to 24 inches at the time of planting. A mix of deciduous and evergreen shrubs is encouraged in order to obtain a variety of color and texture throughout the year.

e. *Ground Cover (Organic)*. Organic ground covers must provide 100 percent coverage on the ground within three (3) years of installation. Except when newly seeded, grass or turf shall provide 100 percent coverage. Organic mulch may be used around plantings to maintain soil moisture and prevent the growth of weeds.

f. *Ground Cover (Inorganic)*. Inorganic ground covers consisting of river rock or similar materials may be used provided they do not exceed 20 percent coverage of the required landscape planting area.

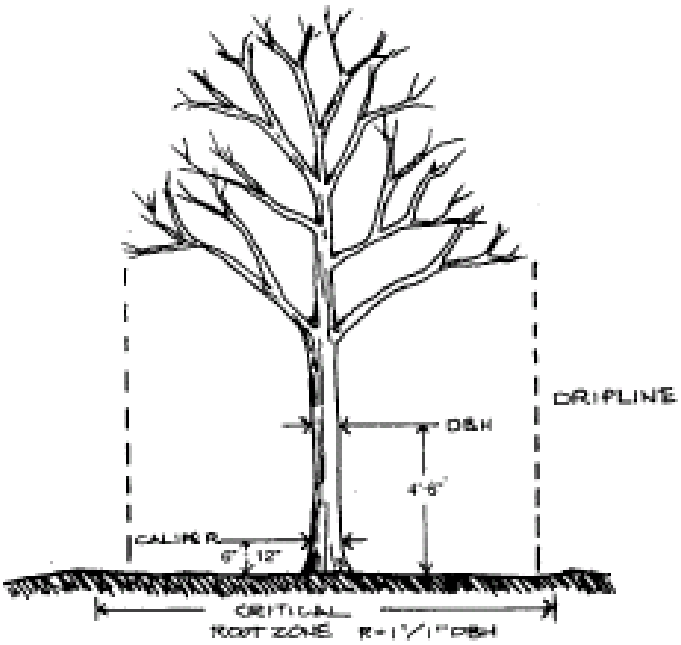

Figure 1: Diagram of Common Tree Terms.

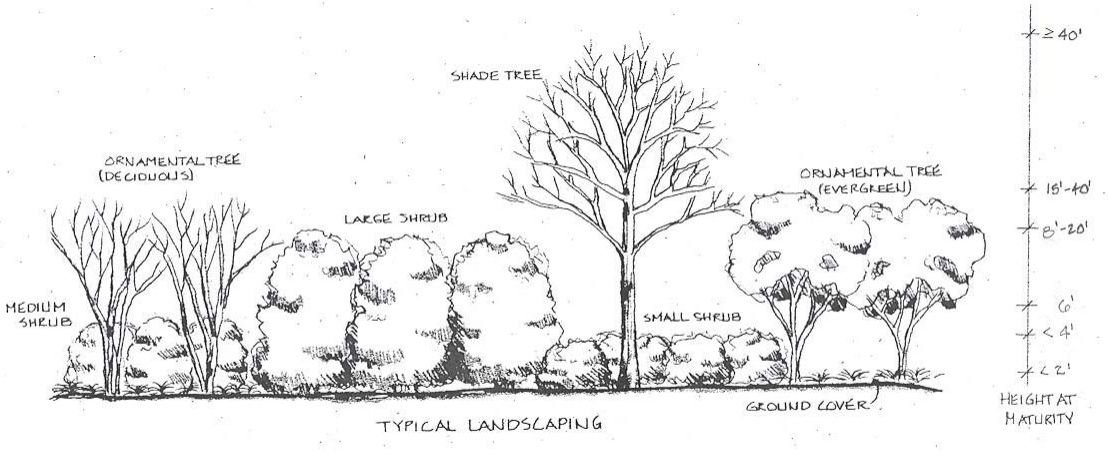

Figure 2: Size of Plant Classifications.

2.2. **Plant Species**.

a. *Acceptable Plant Species*. All plant material, excluding ground covers, should be selected from Table 1. Consideration should be given to the environmental conditions of the site, such as soil, topography, climate, microclimate, pattern of sun movement, prevailing winds and precipitation, and air movement to ensure that plant materials will be established successfully. Plant materials discouraged due to marginal hardiness in this zone, disease susceptibility, or overuse are identified in Table 1. The removal and replacement of invasive exotic plant species are strongly encouraged. Trees near utility rights-of-way must be small to medium in size, pest- and disease-resistant, and slow growing. Table 1 shall be reviewed annually by the Administrator for changes deemed necessary.

b. *Native Plant Species.* 50% of Plants listed in the landscape plan shall consist of native plants identified in the Acceptable Plant Species Table 1.

c. *Invasive Plants.* No plants listed in the current edition of the NC State University or USDA Invasive Plants lists shall be used.

d. *Acceptable Substitutes*. The Administrator has the authority to approve the installation of comparable substitution plant materials not listed on Table 1 to satisfy the requirements of Article 11 when other unforeseen conditions prevent the use of the exact materials shown on the approved landscape plan. Significant changes that require the replacement and relocation of more than 25 percent of the plant materials requires a new landscape plan and approval through the plan review process.

e. *Uniformity and Diversification*. A mixture of plant genus and species, and perennials and annuals is encouraged to avoid potential loss due to infectious disease, blight, or insect infestation. Planting material shall be limited to no greater than 10 percent of any one species or cultivar, 20 percent of any one genus, and 30 percent of any one family of plant. Planting yards should retain a reasonably uniform design along both sides of a street within the same block or corridor.

	Botanical Name	Common Name	Use Discouraged
Shade Trees	*Acer rubrum spp #*	Red maple	X
	Acer saccharum spp #	Sugar maple	
	Acer x fremanii	Freeman Maple	
unsuitable for use under, or within 20' of overhead utility lines	*Betula nigra #*	River birch	X
	Carya cordiformis #	Bitternut hickory	
	Carya glabra #	Pignut hickory	
	Carya illinoensis #	Pecan	
	Carya ovata	Shagbark hickory	
	Cedrus deodara	Deodar cedar	
	Celtis occidentalis #	Hackberry	
# Native	*Cryptomeria japonica*	Japanese Cryptomeria	
	Cupressocyparis leylandii	Leyland cypress	
	Diospyros virginiana #	Persimmon	X
	Fraxinus americana #	White ash	X
	Fraxinus pennsylvanica	Green ash	X
	Ginkgo biloba	Ginkgo	
	Gymnocladus dioicus 'Stately Manor'	Kentucky Coffee Tree	
	Juniperus virginiana #	Eastern red cedar	
	Liquidambar styraciflua 'Rotundiloba'#	Fruitless Sweetgum	
	Liriodendron tulipifera #	Tulip poplar	
	Magnolia grandiflora #	Southern magnolia	
	Metasequoia glyptostroboides	Dawn Redwood	
	Nyssa sylvatica #	Black gum	
	Pinus echinata #	Short leaf pine	
	Pinus nigra	Austrian pine	
	Pinus taeda #	Loblolly pine	
	Pinus thunbergi	Japanese black pine	
	Pinus virginiana #	Virginia pine	
	Platanus occidentalis #	Sycamore	
	Quercus acutissima	Sawtooth oak	
	Quercus alba #	White oak	
	Quercus bicolor #	Swamp white oak	
	Quercus coccinea #	Scarlet oak	
	Quercus falcata #	Southern red oak	
	Quercus laurifolia #	Laurel oak	
	Quercus nigra #	Water oak	
	Quercus palustris #	Pin oak	
	Quercus phellos #	Willow oak	X
	Quercus shumardii #	Shumard oak	
	Quercus stellata #	Post Oak	
	Quercus velutina #	Black oak	
	Quercus virginiana #	Live oak	
	Sophora japonica regent	Japanese pagoda tree	
	Taxodium distichum #	Bald cypress	
	Tilia codata	Little Leaf Linden	
	Ulmus alata #	Winged elm	
	Ulmus americana 'New Harmony' #	New Harmony Elm	
	Ulmus parvifolia	Lacebark elm	X
	Zelkova serrata 'Musashino'	"Musashino" zelkova	

	Botanical Name	Common Name	Use Discouraged
Ornamental Trees	*Acer buergeranum*	Trident maple	
	Acer campestre	Hedge maple	
	Acer palmatum	Japanese maple	
	Amelanchier canadensis #	Serviceberry	
# Native	*Carpinus betulus*	European hornbeam	
	Carpinus caroliniana #	American hornbeam	
	Cercis spp #	Redbud Cultivars	
	Cornus florida #	Flowering dogwood	
	Cornus kousa	Kousa dogwood	
	Crataegus phaenopyrum #	Washington hawthorn	
	Halesia carolina #	Carolina silverbell	
	Hammamelis mollis	Chinese witch-hazel	
	Ilex fosteri #	Foster holly	
	Ilex opaca #	American holly	
	Ilex opaca hume	Hume holly	
	Ilex x attenuata savannah #	Savannah holly	
	Koelreutaria paniculata	Golden rain-tree	
	Lagerstroemia indica	Crape myrtle	X
	Magnolia soulangeana #	Saucer magnolia	
	Magnolia stellata #	Star magnolia	
	Malus hybrids	Flowering crabapple	
	Ostrya virginiana	Ironwood	
	Oxydendrum arboreum #	Sourwood	
	Pistacia chinensis	Chinese Pistache	
	Prunus caroliniana #	Carolina cherry laurel	
	Prunus cerasifera pissardii	Purpleleaf plum	
	Prunus serrulata kwanzan	Kwanzan cherry	
	Prunus subhirtella pendula	Weeping cherry	
	Prunus yedoensis	Yoshino cherry	
	Ulmus carpinifolia x parviefolia	Frontier Elm	

	Botanical Name	Common Name	Use Discouraged
Shrubs	*Abelia grandiflora*	*Abelia grandiflora*	
	Abelia grandiflora	*Abelia grandiflora*	
	Abelia grandiflora	*Abelia grandiflora*	
# Native	*Azalea indica*	Indian azalea	
	Azalea obtusum Kaempferi	Kaempferi azalea	
	Berberis julianae	Wintergreen barberry	
	Berberis thunbergii	Japanese barberry	
	Callicarpa americana #	American beautyberry	
	Calycanthus floridus #	Sweetshrub	
	Camellia japonica	Camellia	
	Camellia sasanqua #	Sasanqua camellia	
	Ceanothus americanus #	New Jersey Tea	
	Cephalanthus occidentalis #	Buttonbush	
	Chaenomeles speciosa	Flowering quince	
	Clethra alinifolia #	Sweet Pepperbush	
	Cleyera japonica	Cleyera	

	Corylus americana #	Hazelnut	
	Euonymus alatus	Winged euonymus	
	Euonymus americanus #	Strawberry bush	
	Euonymus japonicus	Evergreen euonymus	
	Forsythia intermedia	Forsythia	
	Gaylussacia dumos #	Dwarf huckleberry	
	Gaylussacia frondosa #	Blue Huckleberry	
	Hammamelis virginiana	Witch-hazel	
	Hydrangea aborescens #	Wild Hydrangea	
	Hydrangea quercifolia	Oakleaf hydrangea	
	Ilex aquifolium	English holly	
	Ilex cornuta	Chinese holly	
	Ilex cornuta burfordi	Burford holly	
	Ilex crenata 'hetzi'	Hetzi japanese holly	
	Ilex crenata 'rotundifolis'	Roundleaf japanese holly	
	Ilex "Emily Brunner"	Emily brunner holly	
	Ilex glabra #	Inkberry holly	
	Ilex latifolia	Lusterleaf holly	
	Ilex pernyi	Perny holly	
	Ilex vomitoria #	Yaupon holly	X
	Itea virginica #	Virginia willow	
	Juniperus chinensis pfitzeriana	Pfitzer juniper	
	Juniperus chinesis hetzi	Hetzi juniper	
	Kalmia latifolia #	Mountain latifolia	
	Laurus nobilis	Laurel	
	Leucothoe axillaris #	Coastal doghobble	
	Leucothoe fontanesiana #	Mountain doghobble	
	Leucothoe racemose #	Swamp doghobble	
	Ligustrum vicaryi	Vicary golden privet	
	Lindera benzoin #	Spicebush	
	Loropetalum chinense	Lotopetalum	
	Lyonia lucidia #	Fetterbush	
	Mahonia bealei	Leatherleaf mahonia	
	Myrica cerifera	Wax myrtle	
	Myrica heterophylla #	Bayberry	
	Osmanthus fortunei	Fortune tea olive	
	Osmanthus fragrans	Fragrant tea olive	
	Osmanthus heterophyllus	Holly osmanthus	
	Osmanthus heterophyllus rotundifolius	Curly leaf tea olive	
	Pieris floribunda #	Mountain andromeda	
	Pieris japonica	Japanese andromeda	
	Prunus laurocerasus	English laurel	
	Prunus laurocerasus "Zabel"	"Zabel" Skip laurel	
	Prunus laurocerasus angustifolia	Narrow leafed english laurel	
	Pyracantha coccinea	Scarlet firethorn	
	Raphiolepsis umbellata	Yeddo-hawthorn	
	Raphiolepsis indica	India hawthorn	
	Rhododendron atlanticum #	Dwarf azalea	
	Rhododendron catawbiense #	Catawba rhododendron	
	Rhododendron periclimenoides #	Wild azalea	
	Rosa carolina #	Carolina rose	

Rosa palustris #	Swamp rose	
Sambucus canadensis #	American elderberry	
Sorbus arbutifolia #	Red chokeberry	
Spirea cantoniensis	Reves spirea	
Spirea thunbergi	Thunberg spirea	
Spirea prunifolia plena	Bridalwreath spirea	
Spirea vanhouttei	Vanhoutte spirea	
Taxus cuspidata	Japanese yew	
Vaccinium corymbosum #	Highbush blueberry	
Vaccinium stamineum #	Deerberry	
Vaccinium vacillans #	Lowbush blueberry	
Viburnum acerifolia #	Mapleleaf viburnum	
Viburnum dentatum #	Arrowood	
Viburnum nudum #	Wild raisin	
Viburnum rhytidophyllum	Leatherleaf viburnum	
Viburnum tinus	Laurestinus viburnum	

Table 1: Acceptable Plant Species.

[1] These species must be used for plantings within perennial and intermittent stream buffers.
[2] These species are discouraged due to marginal hardiness in this zone, disease susceptibility, or overuse.

Table 2: Unacceptable and Invasive Exotic Plant Species.

Botanical Name (Genus and Species)	**Common Name**
Ailanthus altissima	Tree-of-heaven
Albizia julibrissin	Mimosa
Elaeagnus umbellata	Autumn olive
Hedera helix	English ivy
Lespedeza cuneata	Korean or sericea lespedeza
Ligustrum sinense	Chinese privet
Lonisera japonica	Japanese honeysuckle
Microstegium vimineum	Japanese grass
Paulownia tomentosa	Princess tree
Pueraria lobata	Kudzu
Rosa multiflora	Multiflora rose
Wisteria sinensis	Chinese wisteria

3.0 Installation Specifications.

3.1. **Soil Preparation**. The preparation of plant pits, hedge trenches, and shrub beds must conform to Leaflet No: 601, Planting Techniques for Trees and Shrubs, North Carolina Cooperative Extension Service, (1997), which is incorporated by reference. Rock, debris, inorganic compositions, and chemical residues must be removed from the soil in planting pits.

3.2. **Excavation**. For planting pits, beds or trenches that are developed in areas that were previously paved, all paving and base stone shall be removed as part of the excavation. Pits must be excavated with vertical sides at a depth approximately equal to the depth of the root ball with a circular outline approximately 2 to 3 times wider than the root ball.

3.3. **Planting**. Root balls should be installed on a flat, compact surface of undisturbed soil and any inorganic ties on top of the root ball must be removed. The top 1/3 of wire baskets should be removed. The top of the tree root ball must not be covered by soil and must be covered by mulch. At least 3 inches of mulch, pine needles, tree bark, or similar materials must be distributed around the plant. See Figures 3 and 4. Tree and shrub supports should not interfere with the plants' typical growing patterns.

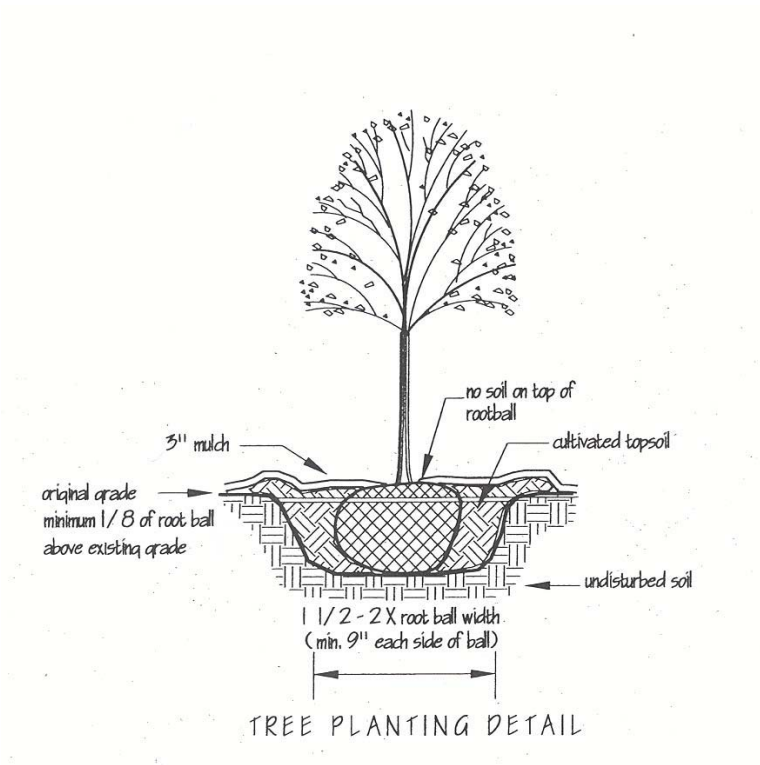

Figure 3: Tree Planting Detail.

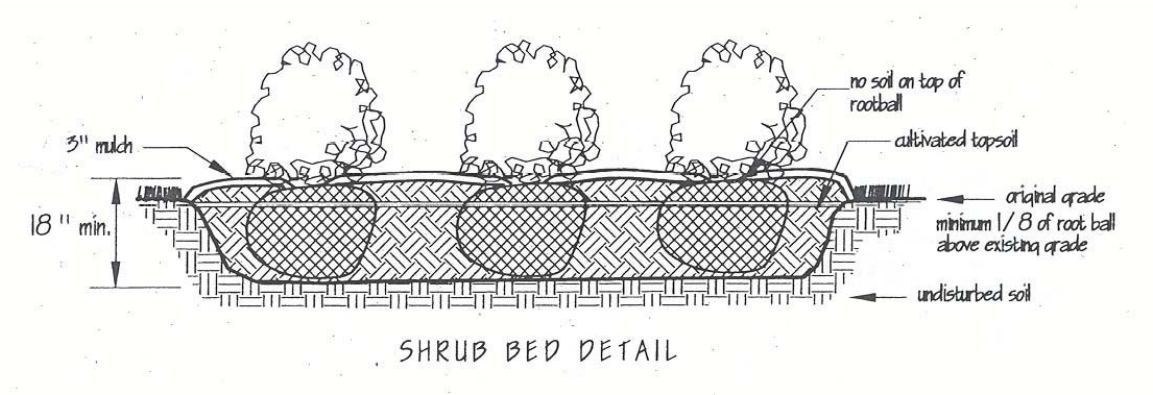

Figure 4: Shrub Planting Detail.

3.4. **Standard of Care during Construction**. Equipment, wood, and similar objects should not be stored or laid upon the critical root zone (see Figure 1) during or after construction. Chemicals and liquid construction wastes must not be dumped, poured, or spilled in the area of any plant materials. Concrete mixer washing should not be performed near the planting site.

3.5. **Associated References**. Soil preparation, planting, fertilization, mulching, and insect and disease control must conform to the North Carolina Cooperative Extension Service, Landscape Management Calendar, which is incorporated by reference hereto. Native plants salvaged from the site or relocated as a result of grading must be re-established in conformance with the recommendations of the North Carolina Cooperative Extension Service.

4.0 Maintenance

4.1. **Responsible Party**. The applicant, property owner, and/or subsequent or successor owner, and their agents, including tenants, are jointly and severally responsible for maintenance of landscaping on the property on a continuing basis for the life of the development as specified in this section.

4.2. **Standard of Care**. All required landscaping must be maintained in a neat and orderly manner at all times. This includes, but is not be limited to, mowing, edging, pruning, fertilizing, watering, weeding, and other activities common to the maintenance of landscaping. Landscaped areas must be kept free of trash, litter, weeds, and other materials or plants not a part of the landscaping. Required landscaping shall be maintained in perpetuity. After the initial installation, the owner and/or tenant of the property upon which the landscaping is installed are responsible for maintaining all required plantings in a healthy, vigorous, and attractive state; and replace dead, diseased, or deteriorated plants. Within residential subdivisions, the maintenance of street trees in planting strips between curbs and sidewalks, which are within the street

right-of-way, is the responsibility of the respective homeowners association, or the abutting homeowner, in the absence of a homeowners association. All required plant material must be maintained in a healthy growing condition as is appropriate for the season. Plant materials that exhibit evidence of insect pests, disease, and/or damage must be appropriately treated.

4.3. **Screening**. If after three (3) years following the installation of required screening plant materials, the plants have not formed an effective screen, or if an effective screen is not maintained, the Administrator may require that another type of screen be added or additional plants be installed.

4.4. **Protection from Vehicles**. Landscaped areas must be protected from vehicular encroachment. The Administrator must inspect all landscaping and no Certificate of Occupancy or similar authorization will be issued unless the landscaping meets the requirements of the development ordinances and these technical standards.

4.5. **Replacement of Dead Plants**. Dead plants must be promptly removed and replaced within the next planting season. If replacement is necessary, all plants and other non-living landscape materials shall be equal in size, density, and appearance as originally required at the time of the approval of the development.

4.6. **Pruning**. Utility crews and companies are encouraged to use the directional pruning technique to remove branches interfering with utility lines. This technique prevents damage, disfigurement, and heavy suckering and reduces future pruning needs. Utility tree trimmers should remove branches to laterals (drop-crotching) in order to direct tree growth away from utility lines. Directional pruning includes top trimming, side trimming, under trimming, and through trimming. See Figure 5 for a pictorial representation of directional trimming.

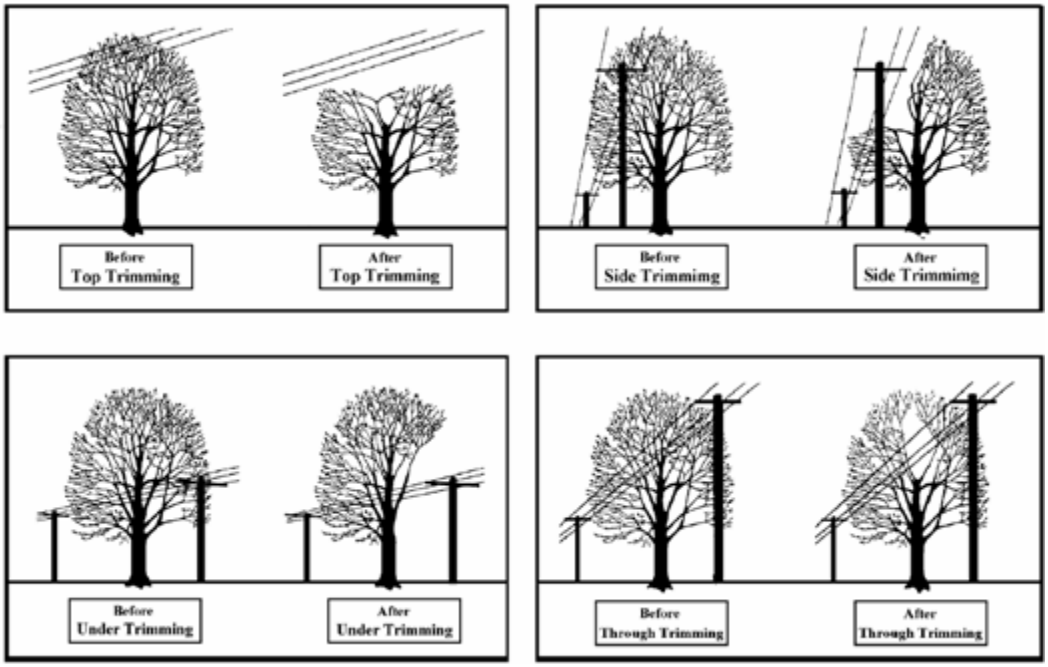

Figure 5: Directional Pruning Examples.

AN ORDINANCE AMENDING THE ZONING ORDINANCE

OF THE CITY OF CONCORD, NORTH CAROLINA

WHEREAS, the City of Concord, North Carolina pursuant to the authority conferred by the North Carolina General Statute §160A-364 enacted an Official Zoning Ordinance for the City of Concord, North Carolina and the Area of Extraterritorial Jurisdiction on July 28, 1977; and

WHEREAS, the City of Concord, North Carolina pursuant to the authority conferred by North Carolina General Statute §§160D-601 through §§160D-605 and 160D-701 through 160D-706, 160D-801 through 160D-808 and 160D-901 through 160D-951 may from time to time as necessary amend, supplement, change, modify or repeal certain of its zoning regulations and restrictions and zone boundaries; and

WHEREAS, the City of Concord, North Carolina pursuant to the authority conferred by North Carolina General Statute §§ 160D-601 through §§ 160D-605, 160D-701 through 160D-706, 160D-801 through 160D-808 and 160D-901 through 160D-951 does hereby recognize a need to amend the text of certain articles of the City of Concord zoning Ordinance.

NOW, THEREFORE, BE IT ORDAINED by the City Council of the City of Concord, North Carolina:

SECTION 1. That the "Technical Standards Manual" of the CDO, be amended to add Article VIII, "Traffic Impact Analysis (TIA)" to read as follows.

City of Concord
Technical Standards Manual

Article VIII
Traffic Impact Analysis (TIA)

TABLE OF CONTENTS

Article VIII

APPENDICES

This page left blank intentionally

1.0 PURPOSE

A Traffic Impact Analysis (TIA) evaluates the adequacy of the existing and planned transportation system to serve future traffic growth and new development. A TIA should address all elements of the transportation system as it relates to pedestrians, bicyclists, transit, vehicular traffic, and adjacent land development. Throughout the TIA process, cooperation between City staff and the applicant is encouraged to provide safe and efficient conditions for public travel. This Article of the City of Concord's Technical Standards Manual identifies study analysis requirements, format, and transportation operation requirements.

All TIAs for future developments shall begin with initial communication between the Applicant, City Transportation staff, and NCDOT staff as necessary. This communication should be initiated by the Applicant as soon as a project concept is under consideration. The Applicant should not wait until the project has undergone a detailed design before discussing the potential project with City and NCDOT staff. Failure to do so could result in changes to site access locations and site circulation based upon initial City review comments. The purpose of this communication is to provide Applicants with information on City and State site design, access, and traffic study analysis requirements. Site plans should be of a conceptual nature for this meeting to minimize Applicant efforts in the preparation of final plans for submittal to the City approval processes. The City's Development Review Committee, which is administered by the Planning Department and includes City Transportation staff, holds pre-submittal meetings on a weekly basis and the Applicant is encouraged to schedule a time slot to discuss the potential project in one of these meetings.

2.0 QUALIFICATIONS

The TIA *should* be conducted by a licensed professional engineer with experience in traffic engineering studies and is pre-qualified by the NCDOT Congestion Management Section to produce TIAs. The TIA **shall** be prepared by, or under the supervision of, a professional engineer (PE) who has a valid North Carolina PE license/registration and experience in traffic engineering operations. The responsible PE **shall** include their signature, PE seal, and the following statement of certification at the beginning of the TIA:

> *"I certify that this Traffic Impact Analysis has been prepared by me or under my immediate supervision and that I have experience and training in the field of traffic and transportation engineering."*
> (Signature)
> John Q. Smith, P.E.
> North Carolina Registration #12345
> Consulting Firm, Inc.

Preparation by a Professional Traffic Operations Engineer (PTOE) is preferred for Level 3 and Level 4 TIAs.

The Transportation Director or their Designee may grant an exception to the requirement for a Type 1 TIA to be prepared by a licensed Professional Engineer (PE), except where NCDOT may dictate otherwise. Where it is determined certain requirements of the Type 1 TIA are applicable to a specific development and require preparation by a PE, as noted in Section 4.1, those portions **shall** be prepared by, or under the supervision of, a PE and included as part of the complete Type 1 TIA. If exception is granted, the portions of the Type 1 TIA which have been exempted from the PE requirement **shall** be prepared by, or under the supervision of, a qualified professional with experience in site plan preparations and ability to complete the requirements of the remaining aspects of a Type 1 TIA.

3.0 APPLICABILITY

All proposed non-residential and mixed-use developments, all multi-family and single-family attached residential developments, and all other residential developments with 6 or more total dwelling units will be required to prepare a TIA. The scope and TIA requirements for schools will be determined on a case-by-case basis.

All Applicants are encouraged to begin the TIA process as soon as a project concept is under consideration; however, TIAs should be submitted per the following:

3.1 **Rezoning** - The TIA process shall begin once an application is received. An approved TIA Report and subsequent Transportation Mitigation Agreement (TMA) is required prior to the approval of Rezoning applications.

3.2 **Special Use Permits** – The TIA process shall begin once an application is received. An approved TIA Report and subsequent TMA is required prior to the approval of Special Use Permit applications.

3.3 **Subdivision Development** – If not completed as part of a previous application process, the TIA process shall begin once a Preliminary Plat is submitted. An approved TIA Report and subsequent TMA is required prior to the approval of a Preliminary Plat.

3.4 **Driveway Permit** – If not completed as part of a previous application process, an approved TIA and subsequent TMA is required prior to the approval of Driveway Permits for all proposed non-residential and mixed-use developments, all multi-family and single-family attached residential developments, and all other residential developments with 6 or more total dwelling units.

4.0 STUDY ANALYSIS TYPES

The content and level of analysis for each of the study types will increase as the potential impact of the development increases. The following trip generation warrants (prior to any potential trip reductions are assigned) shall be used to determine the level of analysis required for a TIA.

Study Type	Peak-Hour Trips	Daily Trips
1. Access Location and Design Review	<50	< 1000
2. Small Development	50 to 99	1000 to 1999
3. Medium Development	100 to 499	2000 to 9999
4. Large Development	>/= 500	> 9999

(Subsection f. specifies the basis for these estimates.)

Each of the study types should include the following details:

4.1 **Type 1 - Access Location and Design Review** (for developments that generate less than 50 peak-hour trips and less than 1000 daily trips)

a. **Existing Roadway Geometrics, Traffic Controls, and Traffic Volumes**

The TIA should provide a sketch that shows the roadway and intersection geometry of all roadways and intersections that are adjacent to the development. This sketch should also note the existing traffic controls (stop signs, signals, etc.) for the intersections being depicted. The Applicant should also provide a schematic of the roadway system that lies directly adjacent to the development along with the estimated daily volumes on those roadways. The daily volumes for many area roadways are available on the following NCDOT web site:
https://connect.ncdot.gov/resources/State-Mapping/Pages/Traffic-Volume-Maps.aspx
If volumes are not available, the Applicant will need to provide them.

b. **Sight Distance Evaluation (PE Required)**

The TIA should contain an evaluation of the sight distance available for the development entrance/exit using the methodology described in AASHTO's *A Policy on Geometric Design of Highways and Streets*. The stop-controlled Type B1 and B2 situations should be used. A summary of this methodology is shown in Appendix E. The evaluation should be performed for proposed street connections with the existing street system. The evaluation should also be performed for internal street intersections if they exist.

c. **Access Evaluation: Number and Spacing**

The TIA shall show the proposed driveway location(s) and its relationship to other adjacent driveways. Driveways on both sides of the roadway should be shown. This shall be in graphic form and show distances and widths of driveways.

d. **Access LOS Analysis (PE Required)**

Where a new public street is proposed, the TIA should provide a LOS analysis for all individual movements where the proposed street(s) intersects an existing street.

e. **Trip Generation**

The TIA should provide trip generation estimates for the weekday morning and evening peak hours in addition to daily trip generation totals. This trip generation should be based on the most recent edition of the Institute of Transportation Engineers (ITE) *Trip Generation Manual*. Please note that depending on the type and use of the proposed development, trip generation estimates may be required for other than normal weekday peak hours.

f. **Site Circulation Evaluation**

The TIA shall contain a site circulation map with arrows that clearly defines how entering and exiting traffic and service/delivery vehicles will travel through the site.

g. **Turn Lane Determinations**

Left and right turn lanes and storage lengths shall be provided in accordance with the requirements and warrants outlined in Appendix C, Turn Lane Warrants, as well as using guidance provided in the NCDOT's *Policy on Street and Driveway Access to North Carolina Highways*. NCDOT Nomograph for determining storage length, along with NCDOTs recommended treatments for turn lanes are provided in Appendix C as a reference, however, NCDOT's *Policy on Street and Driveway Access to North Carolina Highways* should be consulted for further guidance.

h. **Traffic Signal and/or Multi-Way Stop Analysis (PE Required)**

The TIA shall contain a Traffic Signal and/or Multi-Way Stop analysis for all locations where a Traffic Signal or Multi-Way stop is proposed or is to be analyzed as a potential mitigation measure.

4.2 **<u>Type 2 - Small Development</u>** (for developments that generate from 50 to 99 peak-hour trips or between 1,000 and 1,999 daily trips)

a. **All required elements of a Type 1 TIA**

b. **Planning Level Capacity Analysis**

The TIA should contain an estimated Level of Service (LOS) analysis of the roadways within the Impact Analysis Area. The Cabarrus-Rowan Metropolitan Planning Organization (CRMPO) Comprehensive Transportation Plan (CTP) includes the determined existing capacity and the future proposed capacity of many area roadways. These numbers should be used to determine the LOS based on a volume to capacity ratio (V/C). Both existing and build-out conditions should be included in the analysis.

c. **Ped/Bike LOS Analysis**

The TIA shall determine the Ped/Bike Level of Service at signalized intersections within the Impact Analysis Area. For bicycles and pedestrians, the Impact Analysis Area for Ped/Bike analysis is generally, but not limited to, 600 feet from the development. The methodology for this analysis is described in Appendix G.

d. **Crash History and Analysis**

If the development is adjacent to a roadway or intersection with a high frequency of crashes, as identified by City staff, the TIA shall contain a crash history and analysis. The need for this shall be discussed during the scoping phase. If a crash analysis is needed, City Transportation will provide a list of crash reports for the study area, where available, upon request. The TIA shall diagram the crashes and list possible causes for the crashes. The TIA shall then discuss how the proposed development access may affect and address the crash potential at this location.

e. **Trip Distribution and Assignment**

The TIA shall schematically show how trips from the development were distributed throughout the Impact Analysis Area network. (This is typically shown with arrows and percentages.) The TIA shall also have a diagram that shows the resulting trip assignments (actual trip numbers).

f. **Intersection Operation Analysis**

The TIA shall perform an operations analysis for both the development entrance(s)/exit(s) as well as all intersections within the Impact Analysis Area. The operations analysis shall include delay values for all movements, as well as 95 percentile queues. Highway Capacity Software, Synchro/SimTraffic, Signal2000, Sidra, or other software approved by the City, shall be used. Two operations analysis shall be performed:

1. Build-Out year without development (base network condition)
2. Build-Out year with development

The two operations analyses shall then be compared to determine the effect of development on traffic operations.

g. **Mitigation Analysis**

A mitigation analysis will need to be performed if at least one of the following conditions exist when comparing the base network conditions to project conditions:

1. The total average delay at an intersection or individual approach increases by 25% or greater while maintaining the same level of service:

   Movements experiencing LOS C or better. The TIA shall identify and investigate, at a minimum, mitigation measures for all traffic movements with a LOS C or better that experience an increase in delay by more than 25% without a change in LOS as a result of the development. The analysis shall be performed using traffic operations software.

2. The Level of service degrades by at least one level:

   The TIA shall identify and investigate, at a minimum, mitigation measures for all traffic movements with a LOS C or better that experience a lower LOS as a result of the development. The analysis shall be performed using traffic operations software

3. Level of Service is "D" or lower:

   Movements experiencing LOS D or below. The TIA shall identify and investigate, at a minimum, mitigation measures for all traffic movements that currently, or will in the build-out year, experience a LOS D or below. The analysis shall be performed using traffic operations software. For movements that experience LOS D prior to the addition of development traffic, the TIA shall investigate mitigation measures that maintain or improve traffic operation levels.

4. *Pedestrian and Bicycle LOS*. The TIA shall investigate mitigation measures for all pedestrian and bicycle movements with a LOS lower than those listed in tables 4-1 and 4-2.

Desired Signalized Intersection LOS for Pedestrians

Land Use	Level of Service
Residential	A
Neighborhood Commercial	A
Business/Office	B
Other	C

Table 4-1

Desired Signalized Intersection LOS for Bicycles

Land Use	Level of Service
Residential	A
Neighborhood Commercial	A
Bike Route	B
Business/Office	B
Other	C

Table 4-2

4.3 **Type 3 - Medium Development** (for developments that generate from 100 to 499 peak-hour trips or between 2,000 and 9,999 daily trips)

a. **All required elements of Type 2 TIA**

b. **Future Road Improvements**

The TIA shall identify all improvements planned by the City, county, or state for roadways within the Impact Analysis Area. The nature of the improvements should be described and considered in the horizon year analyses.

c. **Trip Generation of Adjacent Developments**

Trip generation of nearby developments that have been approved or are currently proposed should be accounted for in the operations analysis. The TIA must consider trips from other adjacent planned development. These trips shall be added to the background traffic growth. Inclusion of adjacent developments should be discussed during the scoping process.

d. **Background Traffic Growth**

For the horizon year analysis, the TIA shall account for normal traffic growth on study area roadways. The background growth increase shall be discussed with City and NCDOT staff. A linear regression of historic traffic growth can be used as a basis for the increase; however, area development potential may justify a higher or lower growth increase than what has been observed historically.

e. **Future Conditions Operation Analysis of Intersections**

In addition to the two Build-Out year analyses (with and without development), the TIA shall consider traffic operations in the future horizon year. Unless otherwise dictated by City Transportation or NCDOT Staff, the horizon year will be Build-Out year plus 5. Two horizon year analyses shall be performed:

1. Horizon year *without* development, with background and adjacent anticipated development. (base network condition)
2. Horizon year *with* development, with background and adjacent anticipated development.

The two operations analyses shall then be compared to determine the effect of development on traffic operations. As with the previous TIA level, a mitigation analysis will then need to be performed if at least one of the following conditions exist when comparing the base network conditions to project conditions:

1. The total average delay at an intersection or individual approach increases by 25% or greater while maintaining the same level of service,
2. The Level of service degrades by at least one level, or
3. Level of Service is “D” or lower.

f. **Effect on Signal Progression**

When the Impact Analysis Area contains multiple signals that are coordinated, the operations

analysis shall use software capable of analyzing progression between the signals. Examples of software include Synchro/Simtraffic, Transyt7f, and Passer.

4.4 **Type 4 - Large Development** (for developments that generate more than 500 peak-hour trips and/or 10,000 or more daily trips)

a. **All required elements of Type 3 TIA**

b. **Transportation System Management/Transportation Demand Management Mitigation Measures**

The TIA shall contain a section that describes Transportation System Management and/or Transportation Demand Management (TDM) measures that the development will implement, including enforcement measures, to reduce its effect on the transportation system. Examples of TDM measures include staggered work hours, transit subsidies, and carpooling initiatives.

4.5 **Other Considerations**. In addition to projected peak-hour and daily trips, other considerations may require a study to be conducted or increase the level of detail required. These considerations will be based on recommendations of City Transportation or NCDOT staff and may include:

a. Crash rates: Locations identified by the City staff as being high crash intersections or locations.

b. Neighborhood sensitivity to traffic impacts: Areas where the potential exists to increase average daily traffic volumes on neighborhood streets by 15 percent or more.

c. Congestion: Areas of high traffic congestion that are currently operating with peak- period LOS D or lower conditions.

d. Planning and Zoning Commission and/or City Council recommendations.

These considerations will be identified by the City or NCDOT staff.

5.0 TRAFFIC IMPACT ANALYSIS PROCESS

5.1 Initial Scoping Communication

Prior to the commencement of a TIA, scoping communication with City Transportation staff is required. This communication will provide the City an understanding of the proposed development concept and needs and discuss the TIA requirements for the project. It is noted that the North Carolina Department of Transportation (NCDOT) has TIA requirements that must be followed if a development project affects or has direct access to the State Highway System. In such cases, appropriate NCDOT staff should be included in the communication.

Background information shall be submitted by the Applicant five or more business days prior to an in-person scoping meeting and shall include a conceptual site plan showing proposed access points, proposed land use(s) and densities, structure and parking envelopes, proposed trip generation and distribution, and other pertinent information. Email correspondence may be sufficient to substitute for an in-person meeting for many cases, however in-person meetings may be needed depending on the proposed development. A checklist to be used by the Applicant for the initial project communication is located in Appendix A of this Article.

5.2 Impact Analysis Area

The analysis area for each study type varies to reflect the potential geographic area affected by the volume of traffic generated by a development. Smaller developments generally draw local trips, potentially affecting adjacent intersections. Conversely, larger size developments generally draw from regional areas, potentially affecting major arterials, freeway interchanges, and most minor roadways. Study areas for each study type for motor vehicle analysis can generally be defined as, but not limited to, the following:

a. **Type 1 - Access Location and Design Review**

Adjacent street intersections within 600 feet of site driveway(s) (access points).

b. **Type 2 - Small Development**

All major signalized and unsignalized intersections within 2,500 feet of site driveway(s). All intersections where traffic estimated for build-out of the proposed new development will constitute 10% or more of any signalized intersection approach during the peak hour should also be included.

c. **Type 3 - Medium Development**

All signalized intersections and freeway ramps within 1 mile and major unsignalized street intersections within 2,500 feet of site driveway(s). All intersections where traffic estimated for build-out of the proposed new development will constitute 10% or more of any signalized intersection approach during the peak hour should also be included.

d. **Type 4 - Large Development**

All signalized intersections and freeway ramps, all unsignalized streets within 1 mile of site driveways, and all intersections where traffic estimated for build-out of the proposed new

development will constitute 10% or more of any signalized intersection approach during the peak hour. The analysis shall also include signalized intersections greater than one mile from the development if the signal is in a coordinated system with other signals in the study area.

e. **Pedestrian & Bicycle**

The study area/Impact Analysis Area for pedestrian/bicycle analyses is smaller and is generally, but not limited to 600 feet from the development.

5.3 TIA Horizons

Based on the level of detail required for each TIA study type, it is necessary to define future traffic analysis horizon years. Please note that NCDOT may have different horizon years. The following horizon years are required for the different study types:

a. **Type 1 - Access Location and Design Review**

No detailed operations analysis required.

b. **Type 2 - Small Development**

Opening year with full buildout/occupancy.

c. **Type 3 - Medium Development**

1. Same as Small Development, plus:
2. Five years after full buildout/occupancy, or five years after each identified buildout year for phased developments.

d. **Type 4 - Large Development**

1. Same as Medium Development, plus:
2. Cabarrus Rowan Area MPO traffic forecast long-range plan year.

5.4 Trip Generation

The major factors determining the amount of traffic that will be generated by a development are its size and land uses. In particular, the type of land use (residential, retail, industrial, office, etc.) will have a significant effect on the amount of new traffic that will be added to the area roadway network and the time(s) of day when it will occur.

a. The Applicant should use the latest edition of the Institute of Transportation Engineers (ITE) *Trip Generation Manual to* estimate trip generation unless individual special studies have been conducted specific to the proposed development or individual company data exists. All sources used shall be referenced. If the source is not from the ITE *Trip Generation Manual*, evidence shall be provided as to their suitability for this particular application. Use of non-ITE rates must be reasonable, defensible and approved by City and/or NCDOT staff. The NCDOT Municipal School Transportation Assistance (MSTA) calculator should be used to calculate projected trip generations for school sites.

b. Trip generation for individual outparcels should be calculated separately from the remainder of

the development. If a development includes multiple buildings of the same land use, trip generation should be calculated separately for each building unless otherwise specified in the ITE *Trip Generation Manual*.

c. Developments involving multiple parcels, or those proposed to subdivide larger parcels to be partially developed, shall include the potential for development on all existing parcels which contribute to the proposed development site as well as all parcels resulting from subdivision/recombination. The trip generation associated with a conceptual master plan should be included in the analysis. In the absence of an appropriate master plan, the potential traffic generation of all existing parcels which contribute to the proposed development site and those resulting from subdivision/recombination shall be estimated using the ITE Trip Generation land use code(s), allowed by the current or proposed City land use and zoning, that produces the maximum number of potential trips.

d. The trip generation table should be organized in a manner that will be clearly understandable by the author of the report and its readers. Table 5-1 is provided as a typical example. The table should identify the following minimum information:

- Land use(s)
- ITE code(s), including the appropriate units attributed to each land use and ITE code
- Size of development
- Trip rates (in, out, total for peak hours) (two-way–daily)
- Number of vehicle trips generated (in, out, total for peak hours)(two-way–daily)
- Data Source - ITE Rate, ITE Equation, Other Data (must be explained and accepted)

Typical Trip Generation Table

ITE Land Use Code	Prop. Land Use	Size	Unit	Daily Trips	AM Peak Hour Trips			PM Peak Hour Trips			Data Source
					Enter	Exit	Total	Enter	Exit	Total	
Total											

Table 5-1

5.5 Trip Reductions

Trip reductions should be calculated and applied in accordance with *NCDOT Congestion Management Capacity Analysis Guidelines*.

a. ***Internal Capture*** **-** Base trip generation may be reduced by rate of internal capture when two or more land uses are proposed using methodology recommended in the most current *Trip Generation Handbook* published by the ITE, or research published by the National Cooperative Highway Research Program (NCHRP) Transportation Research Board. Reductions for internal capture shall be applied to multi- or mixed-use sites only. The internal capture reduction shall be applied before pass-by trips are calculated.

b. ***Pass-by Trips*** - Pass-by trips are those made as intermediate trips between an origin and primary destination (i.e., home to work, home to shopping, etc.). However, pass-by trips are not diverted from another roadway. Base trip generation may be reduced by rate of pass-by capture using methodology recommended in the most current *Trip Generation Handbook* published by the ITE. Pass-by trips associated with the proposed new development may not exceed 10% of the peak-hour volume reported for the adjacent public street network. This network shall include the streets that provide primary access to/from the proposed new development. For example, if a site access drive that connects to a low-volume local street, which its primary access is to a major collector road, the traffic on the major collector shall be used as the adjacent street for pass-by calculation purposes. Evaluation of diverted trips may apply depending on the specifics of each site. A trip generation table shall summarize all trip generation calculations for the proposed new development.

c. ***Existing Use Credit*** – Trip generation reductions may be allowable in the event a development will be replacing or altering an existing site which currently generates traffic. The Applicant is responsible for verifying with NCDOT that any reductions which may be allowed by the City are acceptable to be included in the trip generation calculations. No credit/reductions will be allowed for any portion of an existing site which was not active and currently occupied at the time traffic counts were performed. Trip generation reductions for existing uses will be based solely on actual traffic generated by the existing site. If the existing site was active when traffic counts were performed then sufficient documentation (i.e. certificate of occupancy, lease agreements, utility bills, etc.) should be provided along with additional traffic counts taken at all existing access points in order to determine the allowable trip generation credit. No reductions shall be applied to the trip generation of the proposed development prior to determining the level of TIA required.

5.6 Trip Distribution & Assignment

The developer should discuss proposed trip distribution and assignment with City and/or NCDOT Staff during the scoping process. Reasons for the proposed trip distribution should also be discussed with staff. Proposed Trip Distribution should be approved by the City and/or NCDOT prior to commencement of the TIA. Within the TIA report, site traffic distributions should be depicted graphically as percentages for each direction of travel. Displaying this information on a map provides the best method of showing the directional distribution of traffic for the development. Procedures followed and logic for estimating trip distribution percentages and trip assignment must be well documented in the TIA.

5.7 Scoping Document

Following the initial scoping process, determination of the required study type, Impact Analysis Area, analysis horizon years, trip generation and trip distribution, a Scoping Document shall be prepared by the Applicant or their TIA consultant for review and approval by City and NCDOT staff (as applicable). The Scoping Document shall be signed by the applicant, the City, and appropriate NCDOT staff (as applicable) before work should begin on the TIA.

a. The City of Concord TIA Scoping document is available in Appendix B. If a TIA involves NCDOT streets, the NCDOT *Traffic Impact Analysis Need Screening / Scoping Request* form should be prepared and submitted to NCDOT as well as the City. In the Additional Comments section of the NCDOT *Traffic Impact Analysis Need Screening / Scoping Request* form, the appropriate City TIA Study Type should be annotated. Both documents should be prepared and submitted to the City.

b. Following approval of the Scoping Document the Applicant and/or their TIA consultant may begin preparation of the TIA. Failure by the Applicant or their TIA consultant to provide accurate information or to follow the Scoping Document shall result in disapproval of the TIA until such failures are corrected. If changes are made to the parameters outlined in the Scoping Document, a revised Scoping Document may be required and agreed to by City and NCDOT Staff as well as the applicant.

c. An approved Scoping Document is valid for nine (9) months from the date of final approval. If a TIA is not received prior to the expiration of the nine (9) month period, the Scoping Document may need to be revised or renewed.

5.8 Operating Requirements - System operation is defined to include motor vehicles, pedestrians, and bicycles. Typically, operation is cited in Levels of Service (LOS) that range from A to F. A LOS A represents excellent operating conditions while a LOS F represents very poor operating conditions. In order for the City transportation system to continue to operate safely and efficiently, it is the responsibility of Applicants to minimize and adequately mitigate the traffic impacts of new developments on the system. The City goal is to have its transportation system operate at a minimum Level of Service (LOS) C. However, the City recognizes that at some locations throughout the transportation system, it may only be economically feasible to achieve LOS D.

a. The desirable intersection operation for the City's transportation system is LOS C and the minimum is LOS D. For analysis purposes, this LOS requirement includes each intersection movement, not just the overall average intersection operation.

For developments, there are two basic conditions typically encountered that affect transportation operation.

b. The first condition affects intersections that currently, or which will in the future horizon year, operate without development traffic at LOS C or better. Under this condition, new developments are expected to prevent degradation of LOS to a lower level and/or prevent an increase in delay by more than 25% while maintaining the same LOS at an intersection or an individual approach. City Transportation and/or NCDOT staff will determine if LOS C is a feasible goal to maintain or if LOS D is a more appropriate operational goal. The City Transportation Director shall then make a recommendation to the Development Review Committee (DRC) for consideration. These conditions shall be treated on a case by case basis.

c. The second condition affects intersections that currently, or which will in the horizon year, operate without development traffic at or below LOS D. Under this condition, new developments are expected to prevent any increase in delay and to at least maintain the base condition LOS for an intersection or individual approach.

d. Where a new public street is proposed, the TIA should provide a LOS analysis for all individual movements where the proposed street(s) intersects an existing street. Proposed public streets indicated by the TIA to have an individual movement onto an existing street with a LOS D or lower may not be eligible for public street acceptance.

e. The operation of the Transportation System beyond intersections should also be considered. The calculated existing capacity for many streets throughout Concord is provided in the Cabarrus Rowan Metropolitan Planning Organization's (CRMPO) Comprehensive Transportation Plan (CTP). The level of service based on capacity should be calculated for both

the existing conditions and the build-out and horizon year conditions using Highway Capacity Manual methodologies. The same LOS thresholds apply to street segments as they do to intersections. Applicants are expected to ensure that the streets serving the development have enough capacity to adequately serve the additional traffic added by the development.

The Applicant is responsible for ensuring street segments, intersections and site access control maintain the stated LOS operation for all motor vehicle movements. Driveway permits for developments where transportation impacts are greater than permitted and LOS thresholds are not met may be denied due to inadequate infrastructure.

6.0 TIA REVIEW

6.1 Submittals - The TIA Consultant shall provide at least one (1) electronic and one (1) hard copy of draft and final TIA Reports to the City Transportation Director at PO Box 308, Concord, NC 28026. An electronic copy shall also be uploaded to the respective development application case along with site plans, storm water reports, etc. If a TIA is identified for review by a pre-selected consultant, the Applicant shall also provide the number of hard and electronic copies as required by the review consultant. The TIA Consultant is responsible for providing required copies of TIAs to the NCDOT as applicable. Submittals to the City should include the TIA Submittal Checklist in Appendix H.

6.2 TIA Review - Review of TIAs submitted to the City will be undertaken by City Transportation staff and may be reviewed jointly with, or solely by, a pre-selected consulting firm on behalf of the City. TIAs identified to be reviewed by a consultant will be reviewed by a PE at a consulting firm to be selected by the City. A list of consulting firms pre-qualified by the City for TIA reviews will be identified by City staff following periodic Requests for Qualifications. TIA review consultants may not have a current contract or other agreement related to site design/development or transportation related consulting with the Applicant of the development for which they are conducting the review. All TIAs requiring NCDOT review will also be reviewed by appropriate NCDOT Staff.

a. ***Fees*** – The costs for TIA reviews will be based on review proposal costs requested by City staff of qualified engineering firms. After the scoping process and approval of a scoping document, the City will determine if a TIA will be reviewed by a review consultant, choose a consultant from the pre-qualified list and request a statement of fees for the review of the subsequent TIA. If a TIA is identified to be reviewed by a consultant, a TIA will not be considered submitted and the review will not begin until such time as the Applicant provides payment in full to the TIA review consultant. If, in the review process, additional study revision reviews or meetings are required, supplemental fees may be required by the City/TIA review consultant.

6.3 Review Timelines - The City follows NC GS, Chp. 136, Transportation, § 136-93.1A to align with NCDOT timelines for TIAs.

6.4 Final Approval - The development of the TIA requirements for a specific development request is an iterative process starting with the initial staff communication through the final review. City, and NCDOT staff as appropriate, must give final approval before recommendations will be made to the Planning and Zoning Commission and/or City Council. Once the City and NCDOT have determined the TIA is acceptable the Applicant will be notified by letter that the TIA has been approved.

7.0 STUDY FORMAT

Each TIA needs to be prepared in a consistent manner to assure that all study requirements are addressed and that elected officials and City staff are familiar with study assumptions, procedures, and conclusions. The content of each TIA will vary based on which study type is being required for the development.

7.1 The following general TIA format should be followed. For TIA study types that do not require a certain analysis, such as Future Traffic analysis for Type 1 TIA, that portion of the outline should be omitted.

A. Cover/Signature Page
B. TIA Submittal Checklist
C. Table of Contents
D. Introduction and Executive Summary
E. Proposed Development Description and Site Plan
F. Existing Area Conditions
    1. Roadway and Transportation System
    2. Area Land Uses
    3. Site Access
G. Development Traffic
    1. Trip Generation
    2. Trip Reductions
    3. Distribution
    4. Assignment
H. Future Traffic
    1. Background Traffic Growth
    2. Proposed Off-site Development Traffic
    3. Total Traffic
I. Operation Analysis (without proposed roadway improvements)
    1. Existing Conditions
    2. Build-Out Year Traffic Conditions without Development
    3. Build-Out Year Traffic Conditions with Development
    4. Future Horizon Year Traffic Conditions without Development
    5. Future Horizon Year Traffic Conditions with Development
J. Improvement Analysis (with proposed roadway improvements)
    1. Existing Conditions
    2. Build-Out Year Traffic Conditions without Development
    3. Build-Out Year Traffic Conditions with Development
    4. Future Horizon Year Traffic Conditions without Development
    5. Future Horizon Year Traffic Conditions with Development
K. Crash History and Analysis
L. Turn Lane Determinations
M. Findings
    1. Motor Vehicle
    2. Bicycle/Pedestrian
N. Recommendations
O. Proposed Transportation Mitigation Agreement
P. Technical Appendix
    1. Approved Scoping Document(s) (NCDOT and City)

2. Traffic Count Data
3. Trip Generation/Assignment Calculations
4. Existing Signal Timing Plans
5. Traffic Signal and/or Multi-Way Stop Warrant Analysis
6. Transportation System Management/Transportation Demand Management Mitigation
7. Crash History Analysis
8. Printouts of Operational Level of Service Analysis
9. Pedestrian and Bicycle Level of Service Analysis
10. Other Pertinent Information

For a development where NCDOT requires a TIA, the NCDOT TIA format may be substituted for the outline listed above; however, the TIA should satisfy all requirements of both the NCDOT and the City.

7.2 Content

A detailed summary of the expected content and methodologies to be used in the TIA is given below. Certain contents are dependent on the determined TIA Study Type.

a. ***Cover/Signature page*** – Includes the project name, location, name of the Applicant, contact information for the Applicant, and date of the study. The name, contact information, registration number, signature, and seal of a duly qualified and registered professional engineer in the State of North Carolina are also required to appear on this page. The cover sheet shall also include a statement of compliance with plans, programs, and policies adopted by the City of Concord for maintaining a safe and efficient multi-modal transportation system.

b. ***TIA Submittal Checklist*** – Checklist to help ensure all elements of the TIA are included in the submittal.

c. ***Table of Contents*** – Includes a list of all section headings, figures, tables, and appendices included in the TIA report. Page numbers shall denote the location of all information, excluding appendices, in the TIA report.

d. ***Executive Summary*** – Includes a description of the study findings, a general description of the proposed new development scope, study horizon years, expected transportation impacts of the proposed new development, and mitigation measure recommendations. Technical publications, calculations, documentation, data reporting, and detailed design shall not be included in this section.

e. ***Proposed Development Description*** – Includes a detailed description of the proposed development, including the size of the parcel, development size, existing and proposed uses for the site, and anticipated completion dates (including phasing). It shall also include the square footage of each use and/or the number and size of dwelling units proposed, and a map and copy of the site plan provided by the Applicant.

f. ***Approved Scoping Documents*** – Both the approved City and NCDOT (as applicable) Scoping Documents shall be included in the TIA.

g. ***Site Description*** – Includes a description of the project location within the City and region, existing zoning and use (and proposed use if applicable), and key physical characteristics of the site, including general terrain and environmentally sensitive or protected areas.

h. ***Site Access*** – A complete description of the ingress/egress of the proposed new development shall be explained and depicted. It shall include number of driveways, their locations, distances between driveways and intersections, access control (full-movement, leftover, right-in/right-out, etc.) types of driveways (two-way, one-way, etc.), traffic controls, etc. Internal streets (lanes, flow, and queuing), parking lots, sidewalks, bicycle lanes, and designated loading/unloading areas shall also be described. Similar information for adjacent properties, including topographic grade relationship, shall be provided to evaluate opportunities for internal connections. The design, number, and location of access points to collector and arterial roadways immediately adjacent to the site must be fully analyzed. The number of access points shall be kept to a minimum and designed to be consistent with the type of roadway facility. Driveways serving the site from state roads shall be designed in accordance with the NCDOT's Policy on Street and Driveway Access and/or the City standards, as applicable.

i. ***Study Area*** – The limits of the Impact Analysis Area shall be based on the location, size and extent of the proposed new development, and an understanding of existing and future land uses and traffic conditions surrounding the site. The limits of the Impact Analysis Area for the TIA shall be reviewed and approved by the City and NCDOT staff during the scoping process. At a minimum, the study area shall include all streets and signalized intersections as specified for the determined TIA Study type. Unsignalized intersections between the required signalized intersections will be added to the scope as directed by the City. Related impacts or current operational problems may dictate that other intersections be included in the study area as determined by City staff and/or NCDOT staff. A narrative describing the study area shall identify the location of the proposed new development in relation to the existing transportation system and list the specific study intersections and/or segments. Any unique transportation plans or policies applicable to the area (e.g.CK Rider bus service and future plans) shall be mentioned. A site location map shall be provided and shall identify natural features, major and minor roadways within the study area, study intersections, and a boundary of the proposed new development under consideration.

j. ***Existing Conditions*** – The study shall include a narrative and map that represents AM and PM peak-hour turning-movement volumes for all intersections within the study area.

1. Traffic volumes shall represent 15-minute interval weekday turning-movement counts (Tuesday through Thursday), and shall include heavy-vehicle, pedestrian and bicycle counts. The City and/or NCDOT will determine if modified peak hours or weekend analyses shall be included in the TIA.
2. Traffic counts shall be no more than 12 months old (from the date of initial TIA submittal) and collected:
   - During weeks that have no observed federal, state, or local holidays and periods,
   - During the period when local schools are in session, not to include the first and last week of the academic school year (refer to the local school academic calendar),
   - Outside of time periods for major events such as races or large concert events at the speedway,
   - During the minimum timeframes of 6:30-8:30AM and 2:00-7:00PM,
   - During time periods where normal traffic is present and not potentially altered due to circumstances stemming from voluntary or involuntary travel restrictions, stay at home orders, states of emergency, or other unforeseen situations that may impact typical traffic patterns.

3. At a minimum, 16 hour turning movement counts shall be required to complete the analysis at intersections where a multi-way stop, or traffic signal warrant analysis is included as part of the TIA.
4. Counts taken during or interrupted by significant weather events or traffic incidents may need to be retaken.
5. The source of existing traffic volume data shall be explicitly stated (e.g. new counts collected by Applicant, NCDOT counts, etc.) and records of count data, along with summary sheets for existing turning movement counts should be included in an appendix to the TIA report.
6. A separate narrative and map shall be prepared to describe the characteristics of surrounding roadways, including functional classification, number of lanes, posted speed limit, existing average daily traffic volumes, typical cross section, intersection control, and lineal distance between major roadways. Field notes for the existing conditions investigation may be included in the appendix of the TIA report.

k. ***Development Traffic*** – Trip generation, trip reductions, distribution and assignment should be determined as outlined in sections 5.4-5.6 during the scoping process. These determinations shall be included in the TIA in clear tables and graphic diagrams as appropriate.

l. ***Future Year Conditions*** – Unless otherwise approved by the City and/or NCDOT, future year conditions for a single-phase development shall be analyzed for the year the development is expected to be at full occupancy (build-out year) and five years after the build-out year (build-out + 5). For multiple-phased developments, the scenarios shall be completed in order, with any improvements specified for each phase clearly indicated in each scenario, including five years after the full build-out year (build-out + 5).

   Specific analysis periods to include in the study shall depend greatly upon the proposed new development, proposed project phasing plan, and significant improvements programmed for the surrounding transportation system. Transportation improvements assumed in the future-year background conditions analysis shall be determined during the scoping process and may include those with an expected completion date proximate to that of the proposed new development and funded either by the City, NCDOT, or is the subject of a TMA for another nearby development application. Only projects approved by the City and/or NCDOT during the scoping process may be included in the analysis as future existing infrastructure. Adjacent development traffic information used in the development of the future year background traffic volumes shall be included in the appendix of the TIA report. Unfunded, planned infrastructure projects may be mentioned in the TIA, but the description shall specifically identify that these projects are not included in the background condition. Future year background traffic volumes shall be forecasted using historical growth rate information, regional models, and/or TIA reports for developments approved by the City and/or NCDOT but not yet built. A narrative and map shall be prepared that presents turning movement volumes for each peak hour for all intersections identified within the study area. Future year base traffic volumes, other development volumes, and site traffic volumes shall be indicated and separately identified in the map.

m. ***Operations Analysis (Including Improvement Analysis)*** **-** The TIA shall include multi-modal operations analyses including vehicular, pedestrian, and bicycle to allow for the safe and efficient travel for all modes. Level-of-Service (LOS) and delay are the primary measures of effectiveness for the transportation system. Operations analyses shall be performed for the existing and all future year scenarios. Impacts from the proposed new development shall be measured by comparing the future year background conditions to the future year build-out conditions, and/or horizon year background conditions to horizon year build-out conditions.

Mitigation measures to address the proposed development's impacts on the transportation system shall be analyzed. Analysis guidelines are generally consistent with NCDOT's *Congestion Management Capacity Analysis Guidelines* which should be used as an additional reference.

1. Analysis Software. Consistent with the NCDOT *Congestion Management Capacity Analysis Guidelines*, for software to be acceptable it must be based on HCM methods. System analysis software should be used for streets and networks of multiple and/or stop/yield-controlled intersections. Simulation Software should be utilized to aid in determining storage lengths, verifying geometry and lane continuity, and to identify overall network operations. Analysis procedures utilizing gap acceptance methodology should be used for roundabout analysis. Turn lane storage lengths and node distances should be appropriately coded into the analysis files. Incorrect storage lengths or node/link distances may impact intersection operations during simulation.

   A. All TIA reports submitted to the City shall use Synchro, SimTraffic, VISSIM and/or Transmodeler analysis software for signalized and unsignalized intersections, or Sidra Software for roundabouts, consistent with NCDOT policies and guidelines.

2. Vehicular Capacity Analysis. Unless additional information, data and/or analyses are indicated in this Article, the vehicular capacity analysis should be consistent with HCM and NCDOT *Congestion Management Capacity Analysis Guidelines*.

   A. Unless otherwise noted, Synchro LOS and delay shall be reported for all signalized intersections and approaches identified in the study area.
   B. Based on HCM, LOS for unsignalized intersections is not defined as a whole; instead, only the individual approaches shall be reported based on the HCM reports determined through the Synchro analysis.
   C. Existing signalized intersections shall be modeled based on existing signal timing plans provided by either the City or NCDOT. Existing signal timing plans shall be included in the appendix of the TIA report.
   D. If a traffic signal is part of a coordinated system, it must be analyzed as such under all conditions.
   E. Other standard practices and default input values for evaluating signalized intersections shall be consistent with the most recent guidelines published by the NCDOT *Congestion Management Capacity Analysis Guidelines*.
   F. The City may also require safety, traffic simulation, gap and/or other analyses appropriate for evaluating a proposed new development. Additional analyses and/or traffic capacity or simulation tools (such as VISSIM or Transmodeler) required for the TIA shall be identified during the scoping meeting.
   G. A narrative, table, and map shall be prepared that summarizes the methodology and measured conditions at the intersections reported in LOS (LOS A – F), the intersection and approach signal delay for signalized intersections, the approach delay for unsignalized intersections, and 95th percentile queue lengths for all movements. Capacity analysis worksheets and auxiliary turn-lane warrants for unsignalized intersections shall be included in the appendix of the TIA report.

3. Queuing Analysis. 95th percentile and simulation analysis of future year queues shall be consistent with NCDOT's Congestion Management Unit current practices and published *Capacity Analysis Guidelines*. Turn lanes and storage lengths at unsignalized intersections shall be identified using volume thresholds published in the NCDOT's Policy on Street and Driveway Access to North Carolina Highways (see Warrant for

Left- and Right-Turn Lanes Nomograph, pg. 80) and/or as warranted in Article III of the City TSM. Recommendations for left and right-turn lanes serving the proposed new development shall be designed to account for both the NCDOT and City warrants described above and to meet future year capacity needs identified through the capacity analyses. For proposed new developments that include drive-through facilities, pick-up/drop-off areas, or entrance gates, a queuing analysis is required to ensure that vehicle stacking will not adversely impact the public transportation system. The queuing analysis must be performed using accepted transportation engineering procedures approved by the City and/or NCDOT. If a TIA is required for a new school site, the internal circulation and ingress/egress of the site shall be modeled using a "dummy signal" in the Synchro software as prescribed by NCDOT Municipal School Transportation Assistance (MSTA) department.

4. Pedestrian and Bicycle LOS Analysis. The TIA should determine the LOS for pedestrians and bicyclists at signalized intersections within the impact analysis area and investigate improvements for intersections which fall below the recommended LOS thresholds in tables 4-1 and 4-2. This analysis should be based on the methodology developed by the City of Charlotte, NC outlined in Appendix G. While this Article does not define LOS calculations or recommendations for mid-block pedestrian crossings, the need for mid-block crossings and any proposed mid-block crossings will be considered on a case by case basis.

5. Planning Level Capacity Analysis. The TIA should include an analysis to determine the LOS for adjacent streets based on current and future capacity. The Cabarrus-Rowan Metropolitan Planning Organization (CRMPO) periodically publishes a Comprehensive Transportation Plan (CTP) Roadway Inventory which identifies the standard capacity, as developed by NCDOT methodology, for streets throughout the planning area. Using these existing capacities along with current ADT traffic volumes the estimated LOS based on a volume to capacity ratio (V/C) should be provided using *Highway Capacity Manual* (HCM) methodology for streets within the impact study area. Daily volumes for many roadways throughout Concord are available at the following NCDOT website: https://connect.ncdot.gov/resources/State-Mapping/Pages/Traffic-Volume-Maps.aspx. If volumes are not available, the Applicant will need to collect them.

6. Improvement Analysis. The TIA should include additional operation analyses which include all identified mitigation measures, transportation improvements, and pedestrian and bicycle improvements for all intersections and individual traffic movements which are determined to not meet the operating requirements and recommendations outlined in the sections 4.2f and 5.8 of this Article. The improvement analyses should also include all recommended traffic signals, multi-way stops, turn lanes, and other identified improvements.

n. ***Crash History and Analysis*** - A summary of crash data (type, number, and severity) for the most recent 3-year period at each study location is required. City and/or NCDOT staff will determine if Collision Diagrams should be included in the TIA during the scoping process. Where available and allowable, Traffic Engineering Accident Analysis System (TEAAS) reports and/or police reports will be provided by the City and/or NCDOT and shall be included in the appendix of the TIA report. For locations with prevalent crash types and/or frequency, a discussion shall be included describing factors that may be contributing to the incidents. At a minimum, the proposed new development shall not contribute to factors potentially involved in the existing crash rates. If contributing factors are identified, recommendations to eliminate or

mitigate these factors shall be included.

o. ***Traffic Signal Warrant Analysis*** **-** City staff and/or NCDOT may consider potential signal locations during the scoping phase. However, traffic flow progression is of paramount importance when considering a new traffic signal location. A new traffic signal shall not cause an undesirable delay to the surrounding transportation system. Installation of a traffic signal at a new location shall be based on the application of warrants criteria contained in the most current edition of the Manual on Uniform Traffic Control Devices (MUTCD) and engineering judgment. Traffic signal warrants shall be included in the appendix of the TIA report. Additionally, spacing of traffic signals within the City must adhere to NCDOT requirements. Pedestrian movements must be considered in the evaluation and adequate pedestrian clearance provided in the signal cycle split assumptions. If a signal warrant analysis is recommended in the TIA, the City and/or NCDOT may decide to defer a signal warrant analysis until after the proposed new development has opened to allow use of actual turning movement counts at an intersection. The TIA recommendations must clearly state that this analysis shall occur at a specified date following the opening of the proposed new development. The applicant must issue a bond or letter of credit in the name of the City for the estimated cost of the signal warrant analysis and resulting signal prior to final approval of the TIA. The cost shall be established based on an engineer's estimate provided by the engineer of record for the applicant or by the consultant identified by the City; however, final approval of the dollar amount rests with the City.

p. ***Turn Lane Determinations*** – Left and Right turn lanes and storage lengths shall be provided in accordance with the requirements and warrants outlined in Appendix C, Turn Lane Warrants. The NCDOT's *Policy on Street and Driveway Access to North Carolina Highways* should also be used to determine the need for turn lanes and for design guidelines. A summary of turn lane warrants for each intersection should be included in the appendix of the TIA.

q. ***Transportation System Management/Transportation Demand Management*** – The TIA shall contain a section that describes Transportation System Management and/or Transportation Demand Management (TDM) measures that the development will implement to reduce its effect on the transportation system. Examples of TDM measures include staggered work hours, transit subsidies, and carpooling initiatives. The TIA should include supporting materials sufficient to justify the proposed reductions along with measures to be implemented which will ensure the TDM measures are actively practiced once the development is built out. City and/or NCDOT staff will make a determination whether or not any proposed traffic impact reductions resulting from proposed TDM measures will be acceptable based on the provided supporting materials.

r. ***Findings*** – The TIA should include a summary clearly identifying all instances where mitigations are triggered, are to be identified, or are otherwise required or recommended by the City or NCDOT. This includes all intersection approaches and/or turning movements which fall below the indicated acceptable LOS thresholds, all turn lanes, all traffic signals, all multi-way stops, and all other mitigation measures or transportation improvements identified throughout the TIA Process.

s. ***Recommendations*** – The TIA should include a summary indicating recommended mitigation measures and/or transportation improvements for each instance identified in the Findings.

t. ***Proposed Transportation Mitigation Agreement*** – The TIA should include a proposed Transportation Mitigation Agreement identifying all mitigation measures and transportation

improvements the Applicant agrees to provide as a condition of the applicable application approval. All mitigation measures agreed to in the approved TMA must be constructed or implemented prior to approval of the Certificate of Compliance (COC) for a non-phased development. If the proposed development is planned to be completed in multiple phases all mitigation measures agreed to in the approved TMA must be constructed or implemented prior to approval of the Certificate of Compliance (COC) of the second phase, regardless of the total number of proposed phases unless otherwise agreed to in the TMA.

u. ***Technical Appendices*** – The Technical Appendices should include copies of the Approved Scoping Document(s), Traffic Count Data, Trip Generation Data, Printouts of Operational Level of Service analysis, Pedestrian and Bicycle Level of Service analysis reports, Existing Signal Timing Plans, and supporting documentation for Traffic Signal and/or Multi-Way stop analyses and Transportation System Management/Transportation Demand Management mitigation. The appendices should also include any other pertinent documentation or supporting documents along with any other information noted throughout this Article to be provided.

8.0 GLOSSARY

8.1 Definitions

Applicant – Any person, firm, partnership, joint venture, association, corporation, group or organization applying for an applicable development approval.

Access Management–The control and spacing of access points and median openings to minimize traffic conflicts and reduce crashes.

Background Traffic Growth Rate–The annual rate of change in through traffic on principal off-site streets as determined from historical 24-hour average daily traffic volumes or from MPO transportation/land use projection models.

Crash Analysis–A summary of the three-year crash history at street intersections and along roadway segments. Such analysis typically includes measures to mitigate the impact of site traffic based on safety and crash history.

ITE–Institute of Transportation Engineers.

Level of Service (Motor Vehicles)–A quantitative measure of motor vehicle operating conditions based on such factors as delay, speed and travel time, freedom to maneuver, traffic interruptions, comfort and convenience, and safety.

Level of Service (Pedestrians–Bicyclist)–A qualitative measure of perceived comfort and safety based on such factors as traffic conflicts and intersection enhancements.

MPO–Metropolitan planning organization responsible for regional planning functions as it relates to transportation and land use.

Mode Split–The percentage of site-generated trips that utilize various modes of travel to access a site, such as auto, bus, walk, and bike.

Off-Site Development–Development proposals that have been submitted for the City approval process that are within the TIA study area that may increase traffic volumes on the study area roadway network.

Peak Hour–The single hour of a representative day when the traffic volume on a highway represents the most critical period for operation and the highest typical capacity requirements. Usually considered as the hour with the highest volumes of adjacent street traffic or site-generated traffic.

Planning Capacity–General daily capacity of a street segment based on the typical relationship of daily volume to average system peak-hour volume and traffic composition characteristics.

PTOE–Professional Traffic Operations Engineer as certified by ITE.

Queuing Analysis–An analysis of vehicle stacking and required lane storage lengths.

Study Area–The street network and land use area that encompasses the principal intersections, street segments, and new developments of primary concern in traffic impact analysis.
Traffic Control Device–Any sign, signal, marking, or other device placed or erected for the purpose of regulating, warning, or guiding traffic, pedestrians and/or bicyclists.

TIA–Traffic Impact Analysis

Trip Assignment–The assignment of site plus non-site traffic to specific streets and highways.

Trip Distribution–The allocation of site-generated traffic among all possible arrival and departure routes.

Trip Generation–The number of one-way traffic movements associated with land uses. Factors determining trip generation include use, building size, type of dwelling unit, employees, and land area.

Vehicle Trip–A one-way movement of a vehicle between two points.

Concord
NORTH CAROLINA
High Performance Living

CITY OF CONCORD
MANUAL OF STANDARD DETAILS

MARCH 2022

DRV - DRIVEWAY STANDARDS	
Standard	*Title*
DRV-100	GENERAL DRIVEWAY (DW) NOTES & DIMENSIONS
DRV-101 (2 SHEETS)	GENERAL DRIVEWAY LOCATION DIMENSIONS
DRV-102	DROP CURB RAMP TYPE DW (PLANT STRIP & 2'-6" C&G)
DRV-103	RADIUS CURB RAMP TYPE DW (PLANT STRIP & 2'-6" C&G)
DRV-104	RES. RAMP TYPE DW (BOC 2'-6" C&G)
DRV-105	STREET TYPE DW (2'-6" C&G)
DRV-106	RES. RAMP TYPE VALLEY CURB
DRV-107	RAMP TYPE DW RIBBON PAVEMENT
DRV-108	CONC. CURB & GUTTER DRIVEWAY CUT
DRV-120	ACCESSIBLE PARKING AND SIGNAGE STANDARDS
DRV-121	STANDARD PARKING DIMENSIONS

MI - MISCELLANEAOUS INFRASTRUCTURE STANDARDS	
Standard	*Title*
MI-101	CONC. CURB & GUTTER DETAILS
MI-102	CURB TRANSITION (2-6 TO 2)
MI-103	CURB TRANS. 2-6 TO 1-6
MI-104	CONC. SWLKS
MI-105	SWLK TRANS.
MI-106	CONCRETE MULTI-USE PATH
MI-107	ASPHALT MULTI-USE-PATH
MI-109	TYP. INTERSECTION CURB RAMP LAYOUT AND NOTES
MI-110	TRUNCATED DOMES
MI-111	PERP. CR 2-6 C&G
MI-112	PERP. CR 2-0 VALLEY C&G
MI-113	DIRECTIONAL CURB RAMP SMALL/MED RADIUS
MI-114	DIRECTIONAL CURB RAMP LARGE RADIUS
MI-115	DIRECTIONAL CURB RAMP W/VALLEY CURB
MI-116	PED REFUGE MEDIAN (1'-6" CURB)
MI-117	PED REFUGE MEDIAN (MONOLITHIC CONC.)

STR - STREETS STANDARDS	
Standard	*Title*
STR-101	LOCAL RESIDENTIAL (RES.) STREET
STR-102	RES. COLLECTOR STREET
STR-103	RES. COLLECTOR STREET WITH BICYCLE LANES
STR-104	RES. COLLECTOR WITH PARALLEL PARKING
STR-105	RES. COLLECTOR WITH 45 DEG. REVERSE ANGLE PARKING
STR-106	NON-RES. COLLECTOR
STR-107	NON-RES. COLLECTOR WITH BICYCLE LANES
STR-108	NON-RES. COLLECTOR DIVIDED
STR-109	NON-RES. COLLECTOR 45 DEG. ANGLE PARKING
STR-110	NON-RES. COLLECTOR PARALLEL PARKING
STR-111	RES. CUL-DE-SAC LESS THAN 150'
STR-112	RES. CUL-DE-SAC GREATER THAN 150' (ENCROACHMENT)
STR-113	NON-RES. AND MIXED USE CUL-DE-SAC
STR-114	RES. ALLEY
STR-116	TRANSITION BETWEEN STREET CLASSIFICATIONS
STR-118	CATCH BASIN IN VALLEY CURB
STR-119	CULVERT CROSSING
STR-120	ON-STREET PARALLEL PARKING
STR-121	ACCESSIBLE ONSTREET PARALLEL PARKING
STR-122	ON-STREET REVERSE ANGLE PARKING

MISC - MICELLANEAOUS STANDARDS	
Standard	*Title*
MISC-201	CURB AND GUTTER REMOVAL / REPLACEMENT
MISC-202	UTILITY CUT REPLACEMENT DETAIL
MISC-203 (2 SHEETS)	END OF ROAD BARRICADE
MISC-204	END OF ROAD MARKER
MISC-205	END OF STREET FUTURE DEV. SIGN
MISC-206 (2 SHEETS)	SAFETY RAIL & WARRANTS

NOT TO SCALE

Concord NORTH CAROLINA High Performance Living

CONCORD MANUAL OF STANDARD DETAILS
TABLE OF CONTENTS

3-2022
CMSD - TOC
SHEET 1 OF 1

MINIMUM DRIVEWAY SEPARATION		
	CORRESPONDING DIST. FROM DETAIL SHEETS	
	D	**C**
FUNCTIONAL CLASSIFICATION (STREET A)	SEPARATION BETWEEN DRIVEWAYS[1] (FEET)	SEPARATION BETWEEN DRIVEWAY & STREET[2] (FEET)
Major Thoroughfare		
Non-Res. & Multi-Family	400	250
Single-Family Detached	150	250
Minor Thoroughfare		
Non-Res. & Multi-Family	400	250
Single-Family Detached	150	250
Major Collector		
Non-Res. & Multi-Family	120	120
Single-Family Detached	120	120
Minor Collector		
Non-Res. & Multi-Family	50	60
Single-Family Detached	30	30
Local Street (Inc. Alleys)		
Non-Res. & Multi-Family	50	60
Single-Family Detached	30	30

[1] Distance is measured from the closest edge to the closest edge.

[2] Distance is measured from closest edge of the driveway to the closest parallel edge of the street right-of-way. Minimum separation between Driveways and Streets should be equal to the number shown in the table, the minimum distance required to ensure no portion of a driveway falls within a sight triangle, or the minimum stem length required along entrances to proposed developments. The greatest distance will apply.

MINIMUM STEM LENGTHS	
CLASSIFICATION OF PERPENDICULAR STREET	**L** - MINIMUM STEM LENGTH (FEET)
MAJOR THROUGHFARE	125
MINOR THROUGHFARE	100
MAJOR COLLECTOR	75
MINOR COLLECTOR	
Non-Residential & Multi-Family	70
Single Family Residential	60
LOCAL STREET (INC. ALLEYS)	50

MINIMUM AND MAXIMUM ACCESS WIDTHS				
DRIVEWAY TYPES	**W** - DRIVEWAY WIDTH (FEET)		**F** - FLARE / **R**-RADIUS (FEET)	
	MIN.	MAX.	MIN.	MAX.
Res. Single-Family (Detached)	12	20	1	3
Res. Multi-Family	24	36	5	10
Comm./Industrial (two-way)	24	36	10	30
Comm./Industrial (one-way)	15	20	10	30
Private Street Entrance	24	48	10*	30*
Street Type Driveway	24	36	10*	30*
*Radius only				

SIDE CLEARANCE	
LAND USE	**S** MINIMUM SIDE CLEARANCE
Single-Family Residential Uses	5 Feet
All Other Uses	10 Feet

DRIVEWAY NOTES:

1. ALL CONNECTIONS TO STATE MAINTAINED STREETS MUST BE APPROVED BY NCDOT UNLESS EXEMPT.
2. WHERE NCDOT AND CITY STANDARDS DIFFER, THE STRICTEST STANDARDS MEETING THE MINIMUM REQUIREMENTS OF BOTH WILL APPLY.
3. THE DRIVEWAY APPROACH MUST BE INSTALLED TO THE RIGHT-OF-WAY LINE, AT LEAST 10 FEET FROM THE EDGE OF THE STREET AND/OR BACK OF CURB, OR AT LEAST 5' FROM THE EDGE OF SIDEWALK FURTHEST FROM THE EDGE OF THE STREET. THE GREATEST DISTANCE WILL APPLY.
4. DRIVEWAYS ACCESSING MAJOR OR MINOR THOROUGHFARES OR BOULEVARDS MUST PROVIDE ON-SITE TURNAROUND.
5. DRIVEWAYS ASSOCIATED WITH CORNER LOTS SHOULD BE LOCATED ON THE STREET WITH THE LOWER FUNCTIONAL CLASSIFICATION.
6. REFER TO SECTION 7.5 IN ARTICLE II OF THE TECHNICAL STANDARDS MANUAL (TSM) FOR SIGHT TRIANGLE REQUIREMENTS.
7. REFER TO ARTICLE III OF THE TSM FOR MORE STANDARDS PERTAINING TO DRIVEWAYS.

NOT TO SCALE

Concord NORTH CAROLINA High Performance Living

GENERAL DRIVEWAY NOTES & DIMENSIONS

3-2022

DRV-100

SHEET 1 OF 1

NOTES:
SEE STD. DETAIL DRV-100 FOR DRIVEWAY NOTES

A = APPROACH ANGLE = 90°
C* = CORNER CLEARANCE
D* = DW SEPARATION
F* = FLARE WIDTH
L* = STEM LENGTH
R* = RADIUS
S* = SIDE CLEARANCE
W* = DW WIDTH
ST = SIGHT TRIANGLE (AS REQ.)

*SEE TABLES ON STD. DETAIL DRV-100

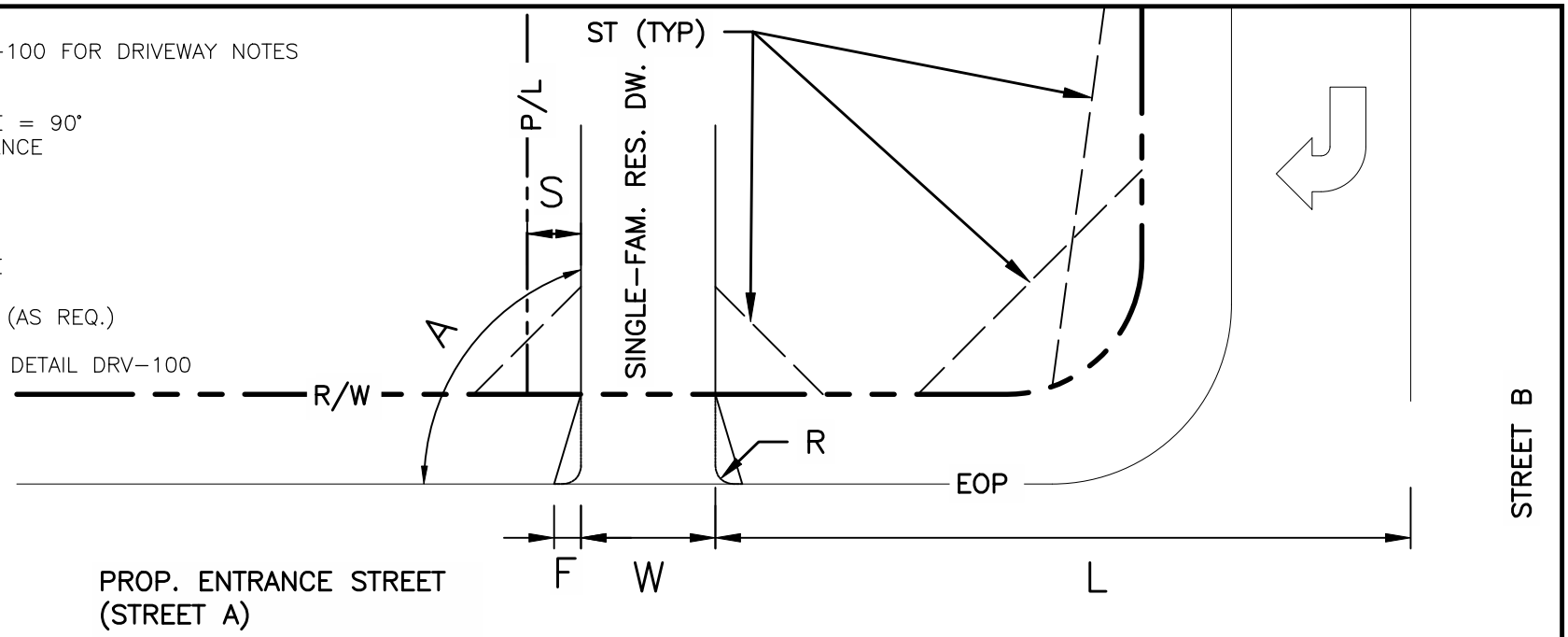

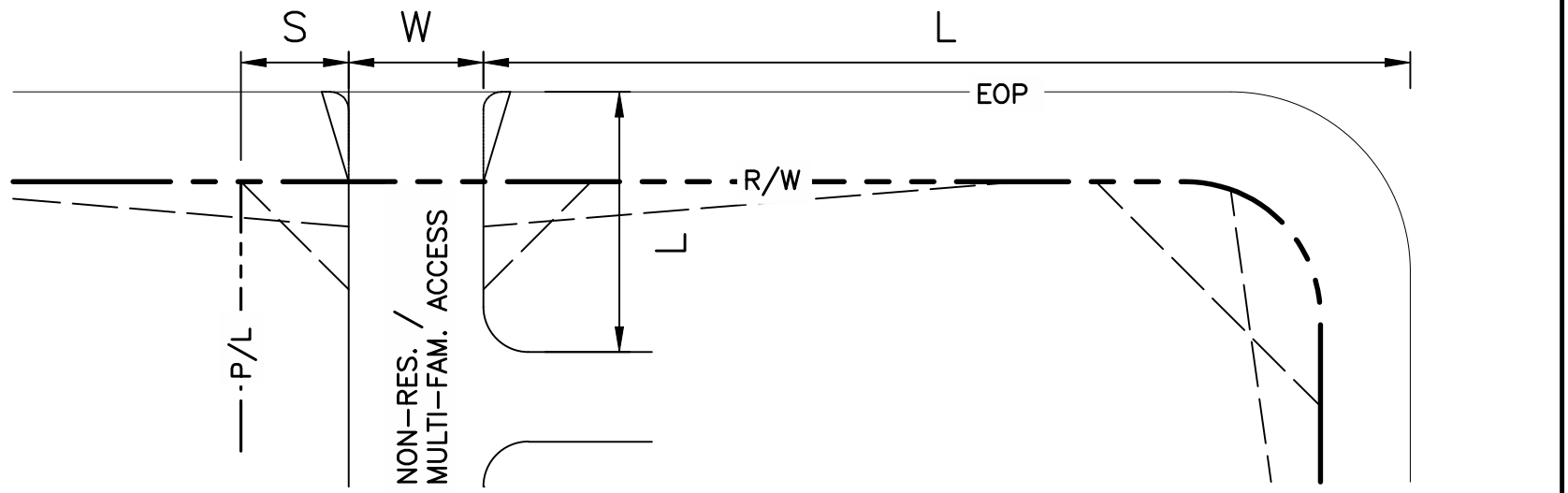

NOT TO SCALE

Concord NORTH CAROLINA High Performance Living

GENERAL DRIVEWAY LOCATION DIMENSIONS

3-2022
DRV-101
SHEET 1 OF 2

NOTES:
SEE STD. DETAIL DRV–100 FOR DRIVEWAY NOTES

A = APPROACH ANGLE = 90°
C* = CORNER CLEARANCE
D* = DW SEPARATION
F* = FLARE WIDTH
L* = STEM LENGTH
R* = RADIUS
S* = SIDE CLEARANCE
W* = DW WIDTH
ST = SIGHT TRIANGLE (AS REQ.)

*SEE TABLES ON STD. DETAIL DRV–100

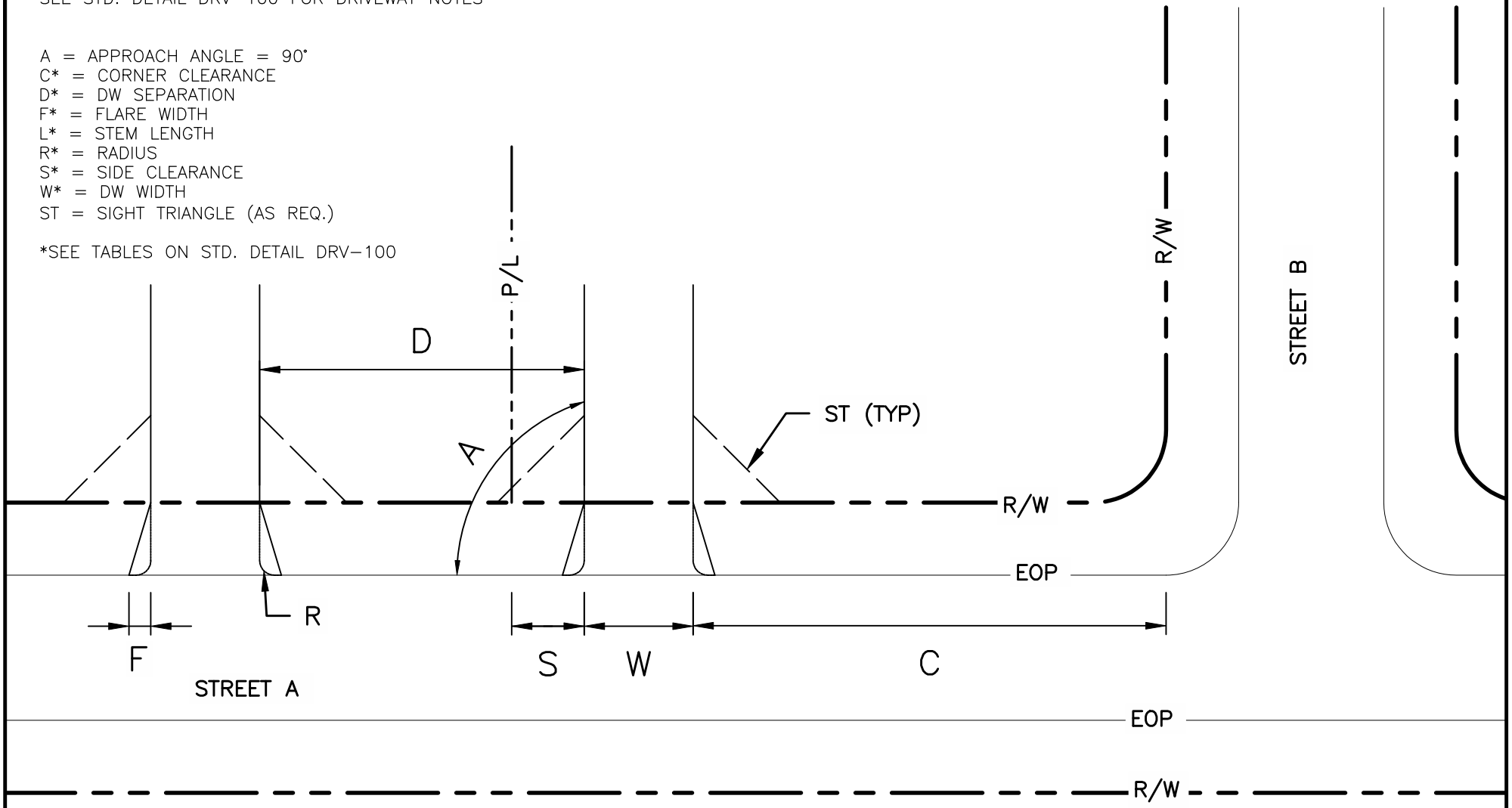

NOT TO SCALE

Concord NORTH CAROLINA High Performance Living

GENERAL DRIVEWAY LOCATION DIMENSIONS

3–2022
DRV–101
SHEET 2 OF 2

NOTES:

1. ALL CONCRETE TO BE 3600 P.S.I.
2. ALL CURB OR CURB AND GUTTER AND SIDEWALKS ARE TO BE REMOVED TO THE NEAREST JOINT BEYOND NEW CONSTRUCTION OR CUT WITH A SAW AND REMOVED. SAW CUT OR JOINT TO BE PERPENDICULAR TO EDGE OF EXISTING PAVEMENT.
3. ALL DRIVEWAYS MUST MEET THE CURRENT CITY DRIVEWAY REGULATIONS AND NCDOT REQUIREMENTS FOR SPACING, SIGHT DISTANCE AND OFFSETS FROM PROPERTY LINES AND INTERSECTIONS.
4. "A" – BREAKOVER SHALL BE 8% OR LESS (A = ALGEBRAIC DIFFERENCE).
5. PRIOR APPROVAL IS REQUIRED ON GRADES EXCEEDING WHAT ARE SHOWN.
6. ** – PER NC IFC SECTION D103.2, FIRE APPARATUS ACCESS ROADS SHALL NOT EXCEED 10 PERCENT IN GRADE.
7. JOINT MATERIAL SHOULD BE PLACED FLUSH WITH CONCRETE.
8. * – THE DRIVEWAY MUST RISE 6" FROM THE GUTTER LINE TO PREVENT RUNOFF FROM ENTERING DRIVEWAY.
9. REFER TO TSM AND STD. DRV–100 AND DRV–101 FOR ASSOCIATED DIMENSIONS AND LOCATION INFORMATION.

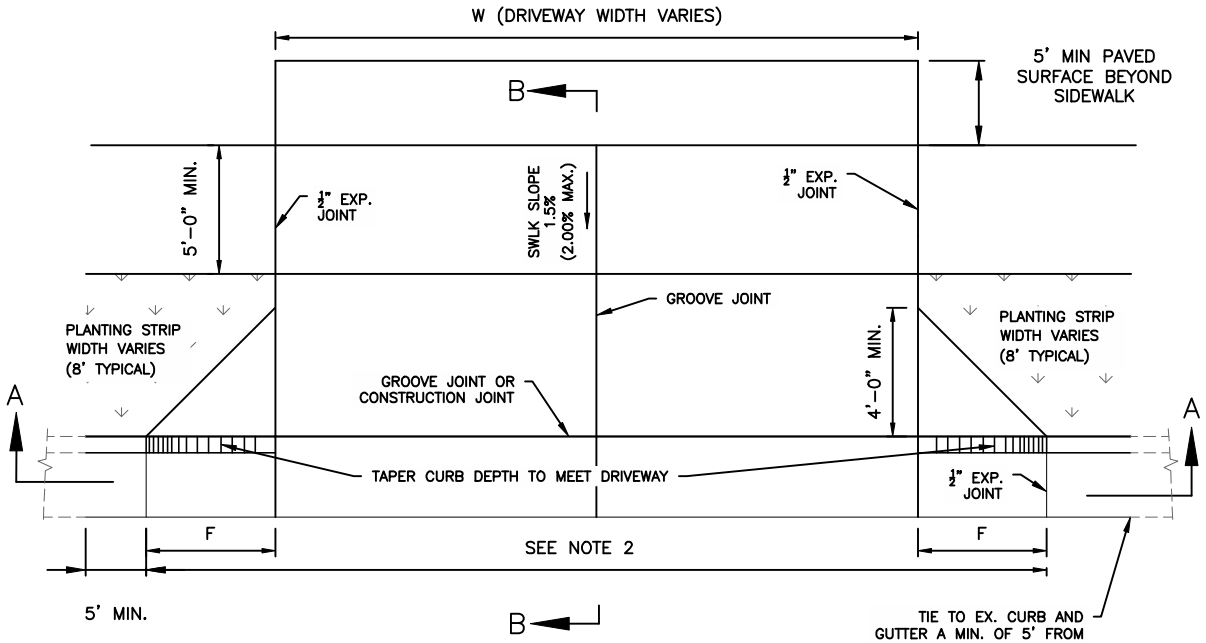

PLAN VIEW

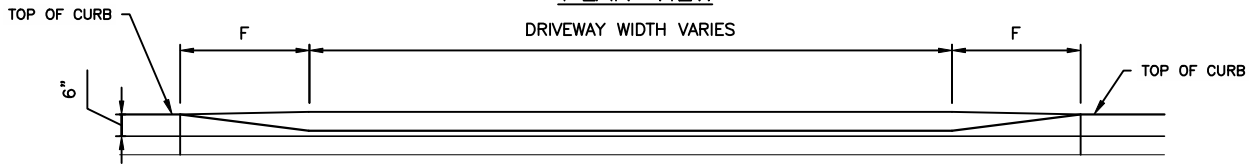

SECTION A – A

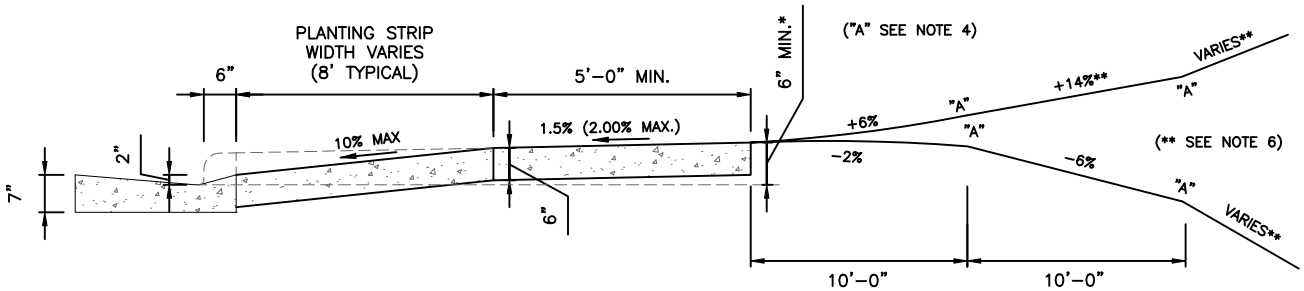

SECTION B – B

NOT TO SCALE

Concord NORTH CAROLINA High Performance Living

DROP CURB RAMP TYPE DRIVEWAY
PLANTING STRIP & 2'–6" CURB AND GUTTER

3–2022

DRV–102

SHEET 1 OF 1

NOTES:

1. ALL CONCRETE TO BE 3600 P.S.I.
2. ALL CURB OR CURB AND GUTTER AND SIDEWALKS ARE TO BE REMOVED TO THE NEAREST JOINT BEYOND NEW CONSTRUCTION OR CUT WITH A SAW AND REMOVED. SAW CUT OR JOINT TO BE PERPENDICULAR TO EDGE OF EXISTING PAVEMENT.
3. ALL DRIVEWAYS MUST MEET THE CURRENT CITY DRIVEWAY REGULATIONS AND NCDOT REQUIREMENTS FOR SPACING, SIGHT DISTANCE AND OFFSETS FROM PROPERTY LINES AND INTERSECTIONS.
4. "A" – BREAKOVER SHALL BE 8% OR LESS (A = ALGEBRAIC DIFFERENCE).
5. PRIOR APPROVAL IS REQUIRED ON GRADES EXCEEDING WHAT ARE SHOWN.
6. ** – PER NC IFC SECTION D103.2, FIRE APPARATUS ACCESS ROADS SHALL NOT EXCEED 10 PERCENT IN GRADE.
7. JOINT MATERIAL SHOULD BE PLACED FLUSH WITH CONCRETE.
8. * – THE DRIVEWAY MUST RISE 6" FROM THE GUTTER LINE TO PREVENT RUNOFF FROM ENTERING DRIVEWAY.
9. REFER TO TSM AND STD. DRV–100 AND DRV–101 FOR ASSOCIATED DIMENSIONS AND LOCATION INFORMATION.

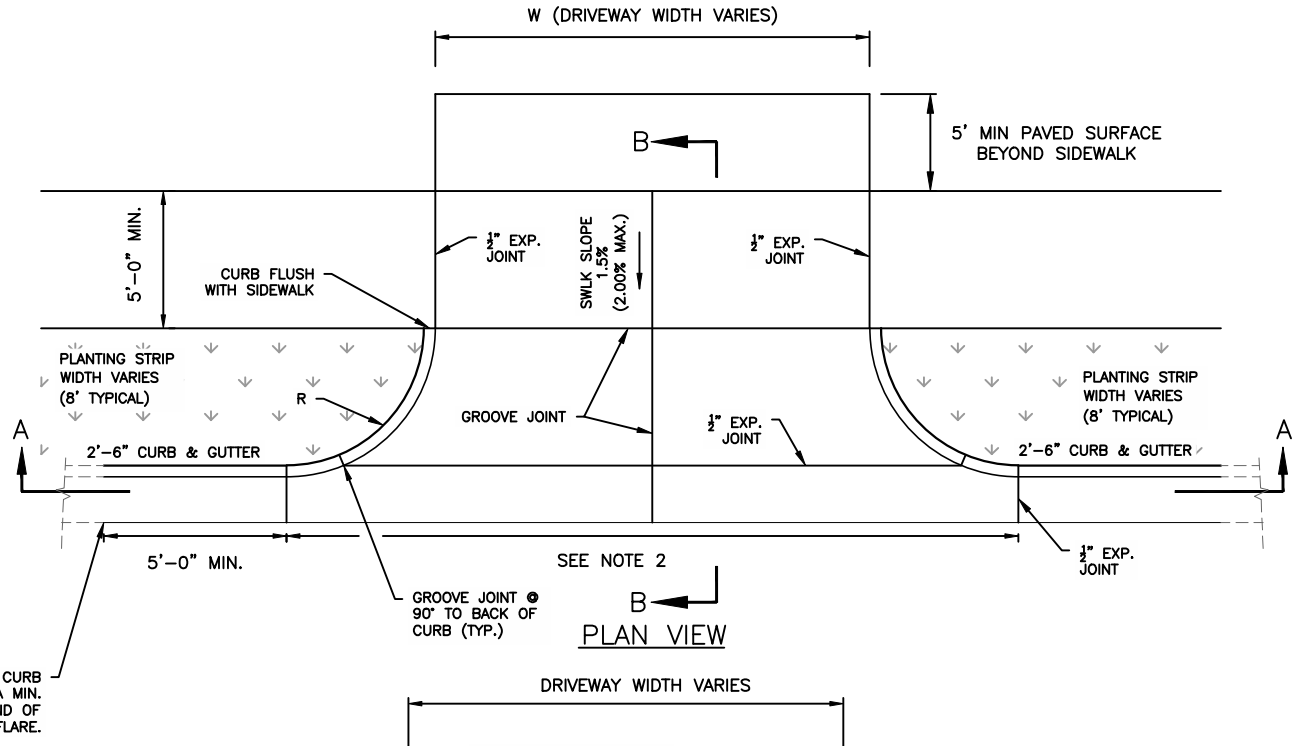

PLAN VIEW

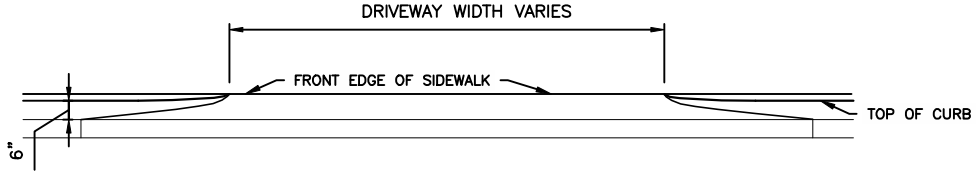

SECTION A – A

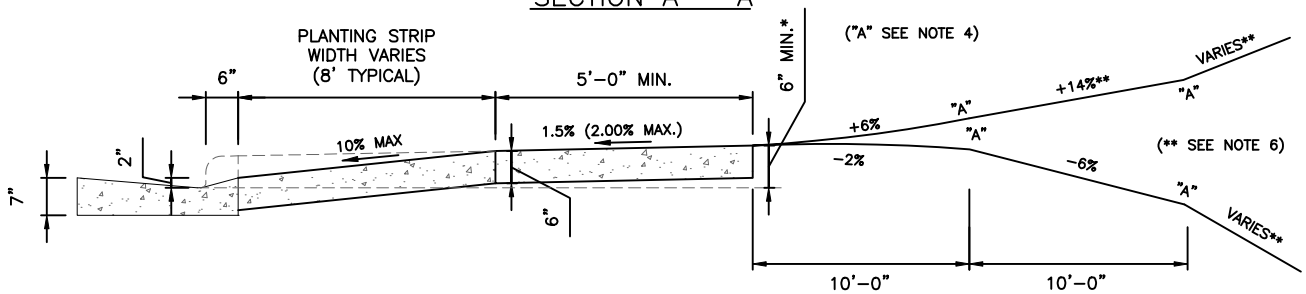

SECTION B – B

NOT TO SCALE

Concord NORTH CAROLINA High Performance Living

RADIUS CURB RAMP TYPE DRIVEWAY PLANTING STRIP & 2'–6" CURB AND GUTTER

3–2022

DRV–103

SHEET 1 OF 1

NOTES:

1. ALL CONCRETE TO BE 3600 P.S.I.
2. ALL CURB OR CURB AND GUTTER AND SIDEWALKS ARE TO BE REMOVED TO THE NEAREST JOINT BEYOND NEW CONSTRUCTION OR CUT WITH A SAW AND REMOVED. SAW CUT OR JOINT TO BE PERPENDICULAR TO EDGE OF EXISTING PAVEMENT.
3. ALL DRIVEWAYS MUST MEET THE CURRENT CITY DRIVEWAY REGULATIONS AND NCDOT REQUIREMENTS FOR SPACING, SIGHT DISTANCE AND OFFSETS FROM PROPERTY LINES AND INTERSECTIONS.
4. "A" – BREAKOVER SHALL BE 8% OR LESS (A = ALGEBRAIC DIFFERENCE).
5. PRIOR APPROVAL IS REQUIRED ON GRADES EXCEEDING WHAT ARE SHOWN.
6. ** – PER NC IFC SECTION D103.2, FIRE APPARATUS ACCESS ROADS SHALL NOT EXCEED 10 PERCENT IN GRADE.
7. JOINT MATERIAL SHOULD BE PLACED FLUSH WITH CONCRETE.
8. * – THE DRIVEWAY MUST RISE 6" FROM THE GUTTER LINE TO PREVENT RUNOFF FROM ENTERING DRIVEWAY.
9. REFER TO TSM AND STD. DRV–100 AND DRV–101 FOR ASSOCIATED DIMENSIONS AND LOCATION INFORMATION.
10. PRIOR APPROVAL IS REQUIRED BEFORE LOCATING SIDEWALK AT BACK OF CURB.

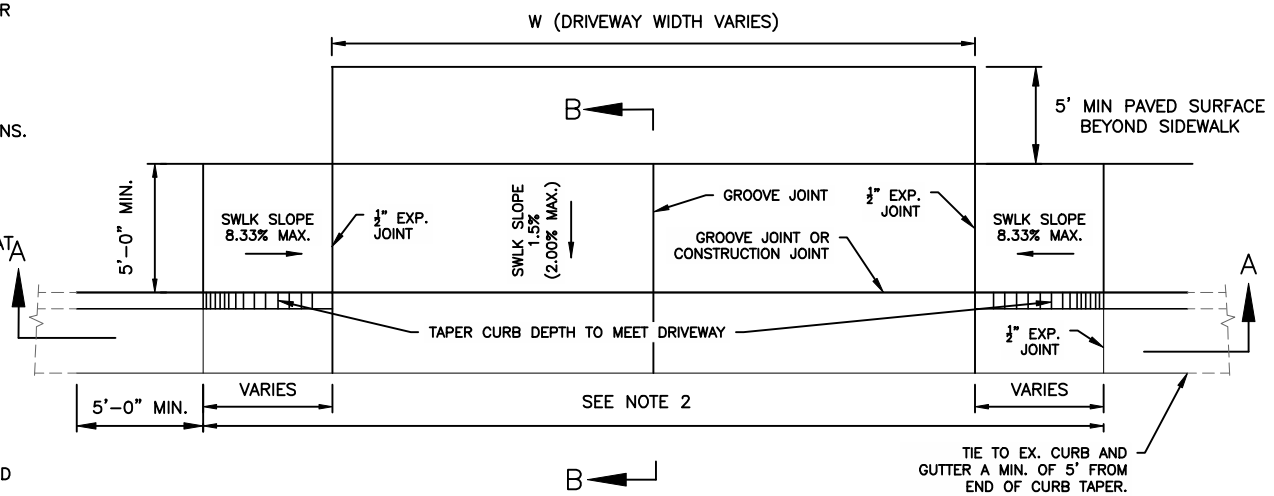

PLAN VIEW

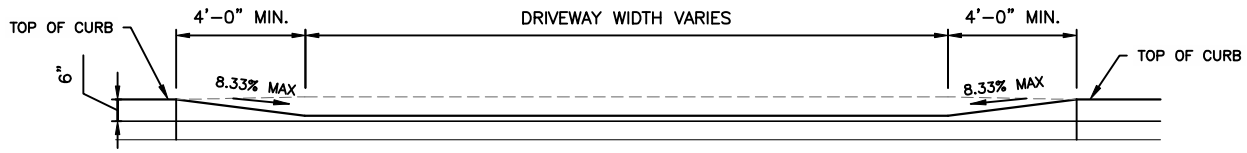

SECTION A – A

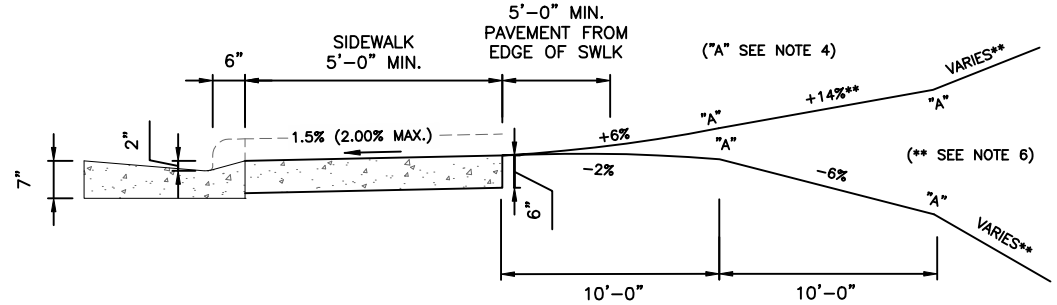

SECTION B – B

NOT TO SCALE

Concord NORTH CAROLINA High Performance Living

RESIDENTIAL RAMP TYPE DRIVEWAY ADJACENT TO 2'–6" CURB AND GUTTER

3–2022

DRV–104

SHEET 1 OF 1

NOTES:

1. WHERE A STREET TYPE DRIVEWAY IS APPROVED BY CONCORD TRANSPORTATION THAT CONNECTS TO AN EXISTING SIGNALIZED INTERSECTION, OR AT A LOCATION WHERE A TRAFFIC SIGNAL INSTALLATION IS PROPOSED BASED ON A TRAFFIC IMPACT/SIGNAL WARRANT STUDY, A FULL DEPTH ASPHALT PAVEMENT IS REQUIRED. THIS PAVEMENT DESIGN IS REQUIRED IN THE DRIVEWAY EASEMENT (100-FOOT MINIMUM) TO MAINTAIN DETECTOR LOOPS AND PAVEMENT MARKINGS. A TRAFFIC SIGNAL WILL BE INSTALLED ONLY IF IT IS DETERMINED TO BE NECESSARY BASED ON A TRAFFIC STUDY OF CURRENT CONDITIONS.
2. A CONCRETE GUTTER IS TO BE USED EXCEPT AT EXISTING OR PROPOSED TRAFFIC SIGNAL LOCATIONS. AT THESE LOCATIONS ADDITIONAL DRAINAGE REQUIREMENTS WILL BE NECESSARY TO ELIMINATE THE NEED FOR GUTTER ACROSS THE DRIVEWAY CONNECTIONS.
3. THE DRIVEWAY MUST RISE 6" FROM THE GUTTER LINE TO PREVENT RUNOFF FROM ENTERING DRIVEWAY.
4. ALL DRIVEWAYS MUST MEET THE CURRENT CITY DRIVEWAY REGULATIONS AND NCDOT REQUIREMENTS FOR SPACING, SIGHT DISTANCE, AND OFFSETS FROM PROPERTY LINES AND INTERSECTIONS.
5. TWO (2) CURB RAMPS PER CURB RETURN REQUIRED AT SIGNALIZED INTERSECTIONS.
6. FOUR (4) FOOT GUTTER AND WINGS ARE REQUIRED TO DIRECT WATER ACROSS DRIVE. GUTTER AND WINGS MAY NOT BE REQUIRED IF THE DRIVEWAY GUTTER SLOPE IS GREATER THAN 2%.
7. MAINTAIN UP TO 1.5% (MAX. 2%) CROSS-SLOPE ON THE PEDESTRIAN ACCESS ROUTE BETWEEN CURB RAMPS. CONCRETE IS OPTIONAL FOR THE CROSSWALK AREA IN THE DRIVEWAY.
8. WHERE DRIVEWAY CONNECTS TO AN NCDOT MAINTAINED STREET, NCDOT APPROVED CURB RAMPS SHOULD BE USED.
9. THE CROSSWALK AREA SHOULD BE GRADED TO ADA STANDARDS WHETHER OR NOT A STRIPED CROSSWALK IS INSTALLED. THE INCLUSION OF A STRIPED CROSSWALK WILL BE ON A CASE BY CASE BASIS.
10. REFER TO STD. DRV-100 & DRV 101 FOR ASSOCIATED DIMENSIONS AND LOCATION INFORMATION

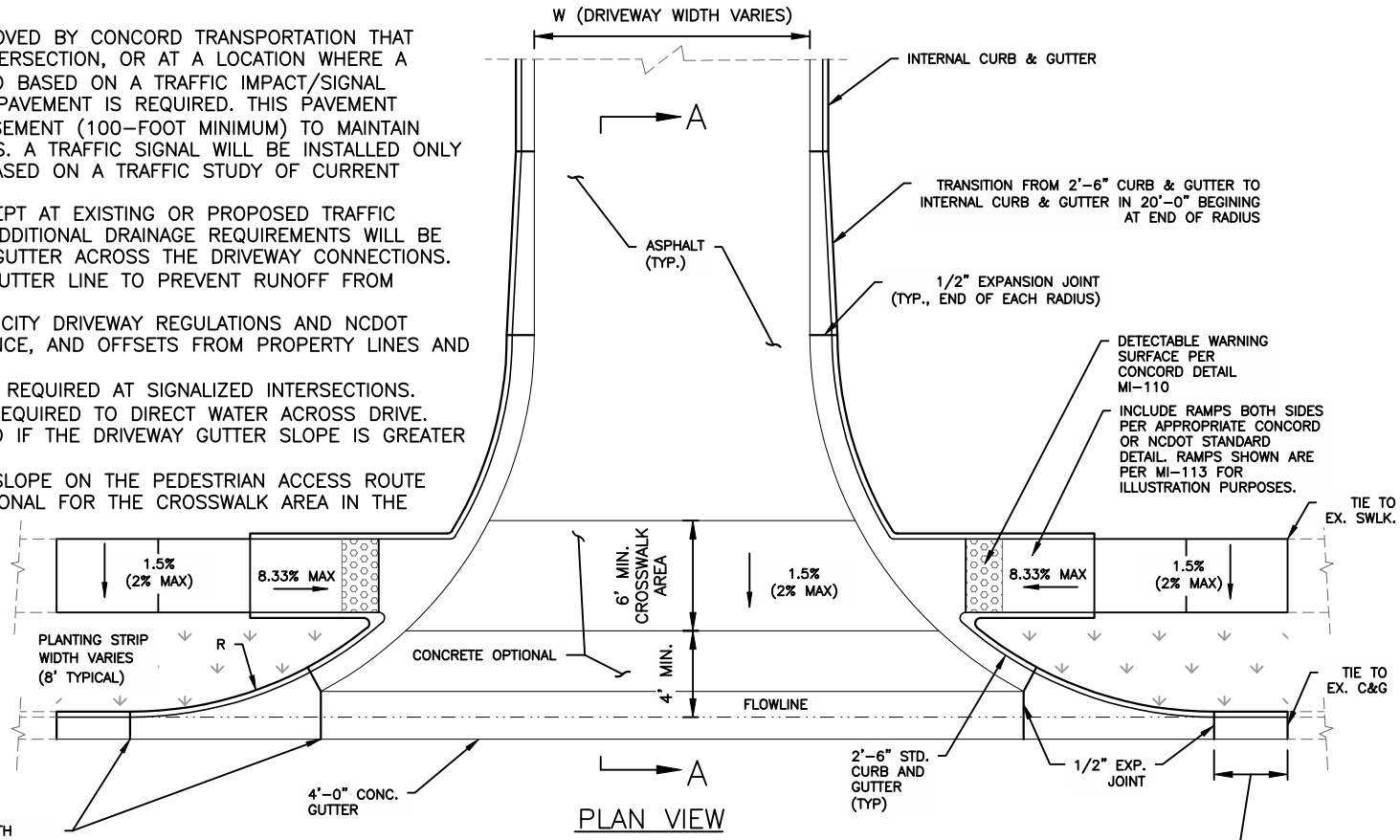

Concord NORTH CAROLINA High Performance Living

STREET TYPE DRIVEWAY
2'-6" STD. CURB AND GUTTER

3-2022

DRV-105

SHEET 1 OF 1

NOTES:

1. ALL CONCRETE TO BE 3600 P.S.I.
2. ALL CURB OR CURB AND GUTTER AND SIDEWALKS ARE TO BE REMOVED TO THE NEAREST JOINT BEYOND NEW CONSTRUCTION OR CUT WITH A SAW AND REMOVED. SAW CUT OR JOINT TO BE PERPENDICULAR TO EDGE OF EXISTING PAVEMENT.
3. ALL DRIVEWAYS MUST MEET THE CURRENT CITY DRIVEWAY REGULATIONS AND NCDOT REQUIREMENTS FOR SPACING, SIGHT DISTANCE AND OFFSETS FROM PROPERTY LINES AND INTERSECTIONS.
4. "A" – BREAKOVER SHALL BE 8% OR LESS (A = ALGEBRAIC DIFFERENCE).
5. PRIOR APPROVAL IS REQUIRED ON GRADES EXCEEDING WHAT ARE SHOWN.
6. ** – PER NC IFC SECTION D103.2, FIRE APPARATUS ACCESS ROADS SHALL NOT EXCEED 10 PERCENT IN GRADE.
7. JOINT MATERIAL SHOULD BE PLACED FLUSH WITH CONCRETE.
8. * – THE DRIVEWAY MUST RISE 6" FROM THE GUTTER LINE TO PREVENT RUNOFF FROM ENTERING DRIVEWAY.
9. REFER TO TSM AND STD. DRV–100 AND DRV–101 FOR ASSOCIATED DIMENSIONS AND LOCATION INFORMATION

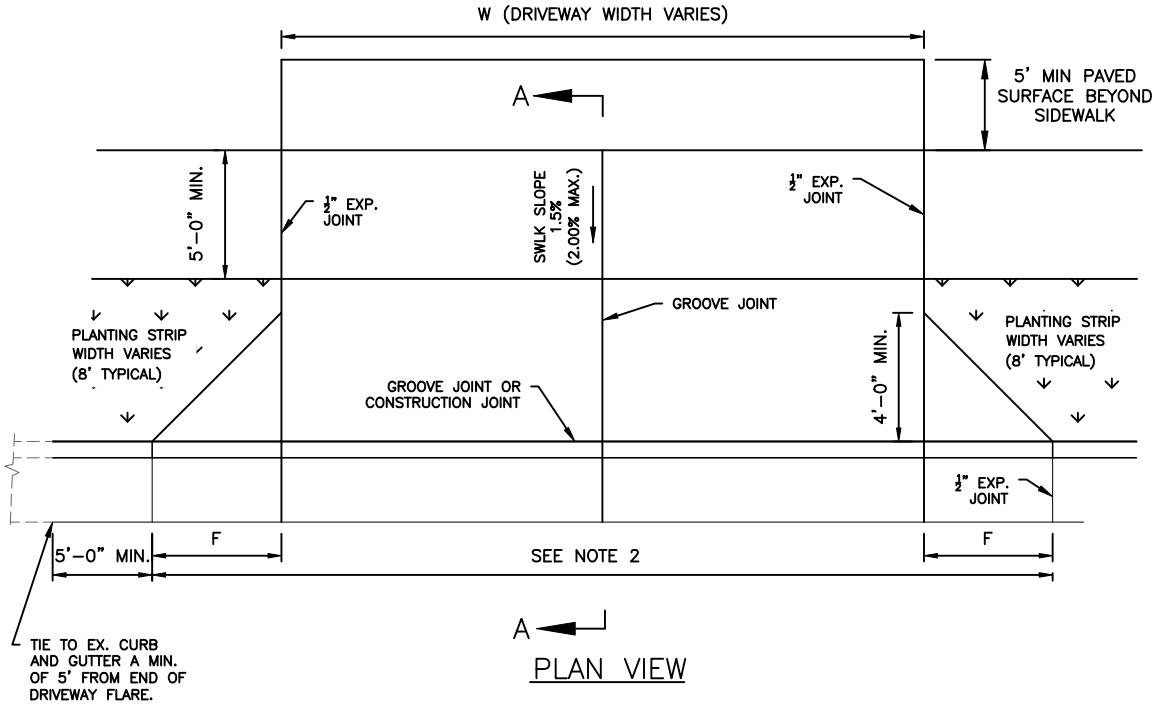

PLAN VIEW

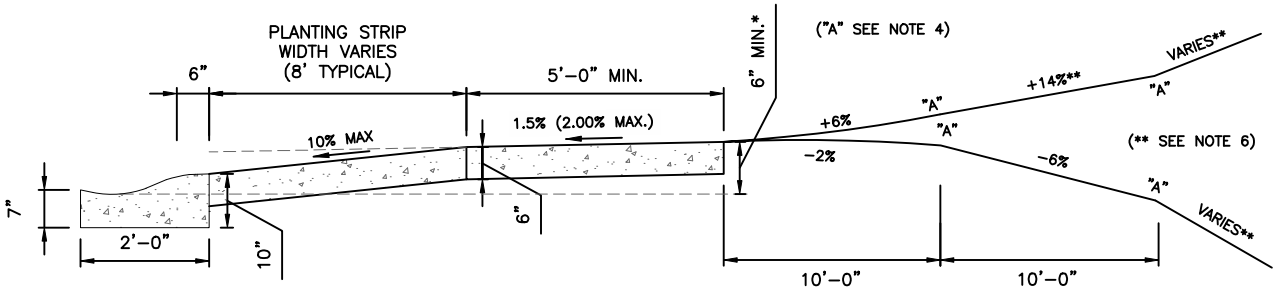

SECTION A – A

NOT TO SCALE

Concord NORTH CAROLINA High Performance Living

RESIDENTIAL RAMP TYPE DRIVEWAY 2'–0" VALLEY CURB AND GUTTER

3–2022

DRV–106

SHEET 1 OF 1

NOTES:

1. ALL CONCRETE TO BE 3600 P.S.I.
2. ALL CURB OR CURB AND GUTTER AND SIDEWALKS ARE TO BE REMOVED TO THE NEAREST JOINT BEYOND NEW CONSTRUCTION OR CUT WITH A SAW AND REMOVED. SAW CUT OR JOINT TO BE PERPENDICULAR TO EDGE OF EXISTING PAVEMENT.
3. ALL DRIVEWAYS MUST MEET THE CURRENT CITY DRIVEWAY REGULATIONS AND NCDOT REQUIREMENTS FOR SPACING, SIGHT DISTANCE AND OFFSETS FROM PROPERTY LINES AND INTERSECTIONS.
4. "A" – BREAKOVER SHALL BE 8% OR LESS (A = ALGEBRAIC DIFFERENCE).
5. PRIOR APPROVAL IS REQUIRED ON GRADES EXCEEDING WHAT ARE SHOWN.
6. ** – PER NC IFC SECTION D103.2, FIRE APPARATUS ACCESS ROADS SHALL NOT EXCEED 10 PERCENT IN GRADE.
7. JOINT MATERIAL SHOULD BE PLACED FLUSH WITH CONCRETE.
8. TO BE USED ON ROADS WITHOUT CURB AND GUTTER WHERE CURB AND GUTTER IS NOT BEING INSTALLED (MUST MEET BOTH CRITERIA).
9. REFER TO TSM AND STD. DRV–100 AND DRV–101 FOR ASSOCIATED DIMENSIONS AND LOCATION INFORMATION.
10. * MINIMUM COVER IS 8" WHEN CLASS IV RCP IS USED. WHERE A DIFFERENT MATERIAL IS APPROVED THE MINIMUM COVER WILL BE DETERMINED ON A CASE BY CASE BASIS.
11. THE PIPE SHALL BE A MINIMUM DIAMETER OF 15" REINFORCED CONCRETE A LARGER PIPE SIZE MAY BE REQUIRED WHERE DETERMINED BY A PROFESSIONAL ENGINEER.
12. THE MINIMUM LENGTH OF THE PIPE IS 20', OR THE LENGTH NEEDED TO EXTEND ONE (1) FOOT BEYOND THE TOE OF A 2:1 SLOPE. SEE SECTION B–B.

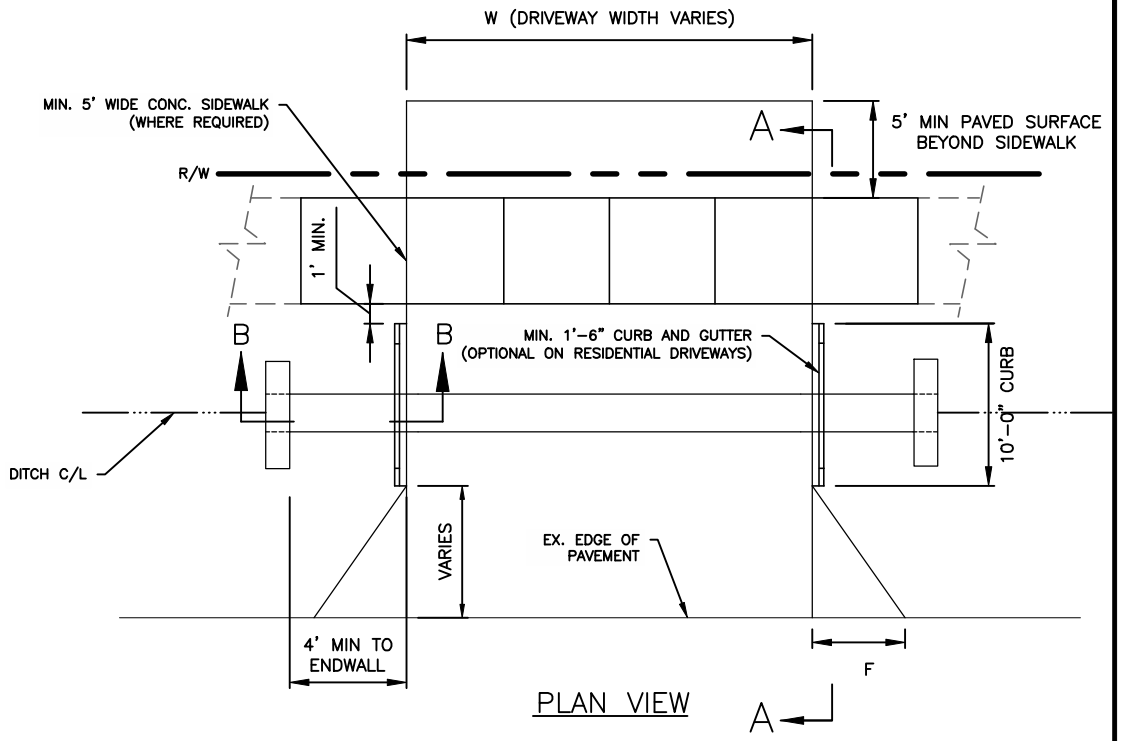

PLAN VIEW

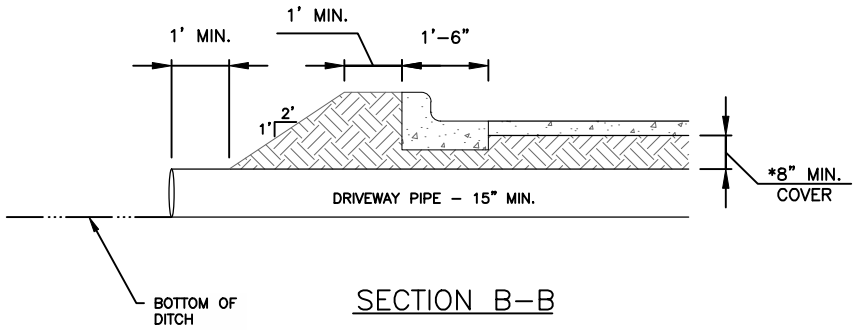

SECTION B–B

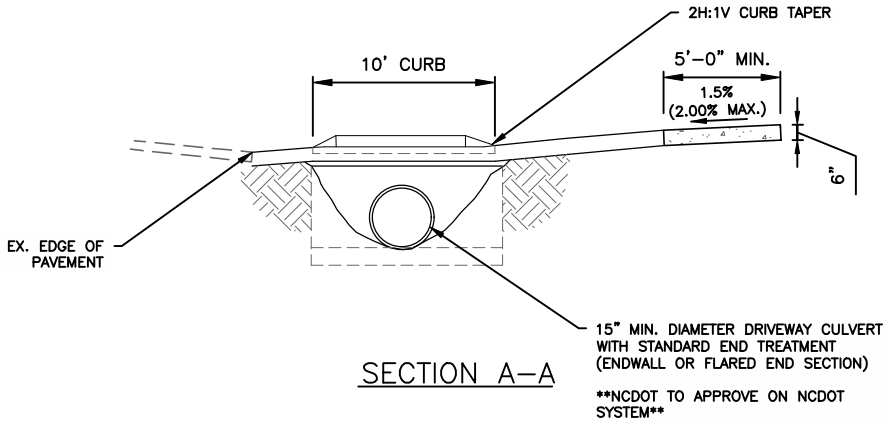

SECTION A–A

NOT TO SCALE

Concord NORTH CAROLINA High Performance Living

RAMP TYPE DRIVEWAY RIBBON PAVEMENT

3–2022

DRV–107

SHEET 1 OF 1

*CONCRETE SHALL BE A MINIMUM OF 6" THICK IN THE RIGHT-OF WAY, MINIMUM 3600 PSI.

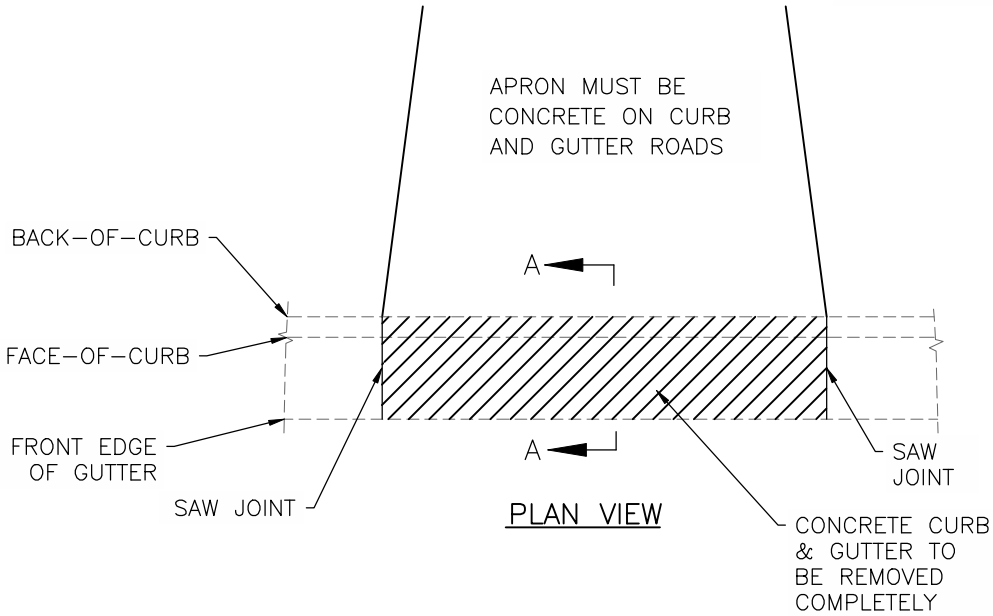

PLAN VIEW

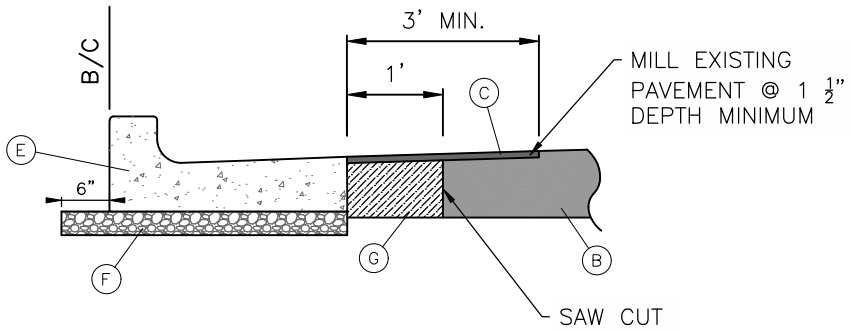

SECTION A – A

NOTES

1. ANY DAMAGED CURB & GUTTER SHALL BE COMPLETELY REMOVED AND REPLACED WITH NEW CONCRETE.
2. ON STREETS WITH A CUL-DE-SAC, THE SAW CUT SHALL BE PERPENDICULAR TO THE FACE OF THE CURB & GUTTER.
3. NO SECTION OF EXISTING CURB & GUTTER WHICH WILL BE LESS THAN 5' SHALL REMAIN. LIMITS OF REMOVAL AND REPLACEMENT SHOULD BE ADJUSTED APPROPRIATELY.

KEY

- (B) EXISTING PAVEMENT STRUCTURE
- (C) MIN. 1 ½" S 9.5B SURFACE COURSE
- (E) 2'-6" STANDARD CURB AND GUTTER SHOWN, APPROPRIATE CURB & GUTTER TO BE DETERMINED BASED ON STREET CLASSIFICATION
- (F) 6" COMPACTED AGGREGATE OR 4" B-25.0C BASE COURSE
- (G) MIN. 8" I-19.0C

NOT TO SCALE

Concord NORTH CAROLINA High Performance Living

CONCRETE CURB & GUTTER DRIVEWAY CUT

3-2022

DRV-108

SHEET 1 OF 1

ACCESSIBLE PARKING REQUIREMENTS

TOTAL PARKING SPACES PROVIDED	MINIMUM NUMBER OF ACCESSIBLE SPACES SPACES REQUIRED	MINIMUM NUMBER OF ACCESSIBLE SPACES REQUIRED TO BE VAN ACCESSIBLE
1 TO 25	1	1
26 TO 50	2	1
51 TO 75	3	1
76 TO 100	4	1
101 TO 150	5	1
151 TO 200	6	1
201 TO 300	7	2
301 TO 400	8	2
401 TO 500	9	2
501 TO 1000	2% OF TOTAL	1 IN EVERY 6 ACCESSIBLE SPACES
1001 AND OVER	20 PLUS 1 FOR EACH 100 OVER 1000	1 IN EVERY 6 ACCESSIBLE SPACES
REFERENCE: SECTION 1106 OF NC BUILDING CODE		

NOTES:

1. ALL ACCESSIBLE SIGNS (R7–8P, R7–8, R7–1, AND 50.10C) SHALL BE MOUNTED AT 7 FEET FROM GRADE TO BOTTOM EDGE OF SIGN FACE (PER MUTCD). MOUNTING HEIGHT CAN BE REDUCED TO 5 FEET IF PLACED IN AN AREA BETWEEN SIDEWALK AND BUILDING FACE IN WHICH PEDESTRIANS ARE NOT EXPECTED TO USE.
2. IF ACCESSIBLE ROUTE IS A RAISED SIDEWALK AREA, THEN RAMPS ARE REQUIRED AT LOADING ZONE AREA. MAINTAIN MIN. 4' WIDE CONTINUOUS PASSAGE.
3. VERTICAL CLEARANCE FOR VANS MUST BE GREATER THAN 98–INCHES.
4. THIS DETAIL IS TO PROVIDE GENERAL GUIDANCE FOR PARKING LAYOUT AND DESIGN; REFER TO MANUAL ON UNIFORM TRAFFIC CONTROL DEVICES (MUTCD) U.S. DEPARTMENT OF TRANSPORTATION AND NORTH CAROLINA DEPARTMENT OF TRANSPORTATION SUPPLEMENT AND NC BUILDING CODE FOR ADDITIONAL INFORMATION.

PARKING SPACE PAVEMENT MARKINGS

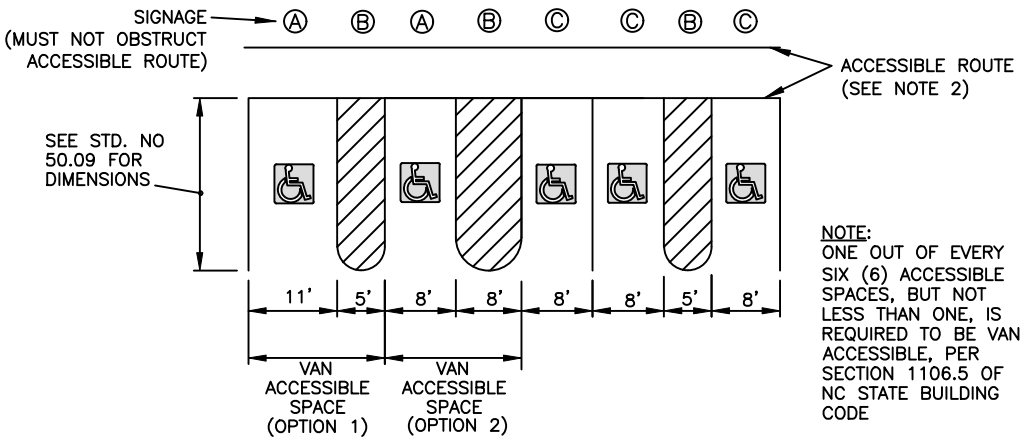

NOTE:
ONE OUT OF EVERY SIX (6) ACCESSIBLE SPACES, BUT NOT LESS THAN ONE, IS REQUIRED TO BE VAN ACCESSIBLE, PER SECTION 1106.5 OF NC STATE BUILDING CODE

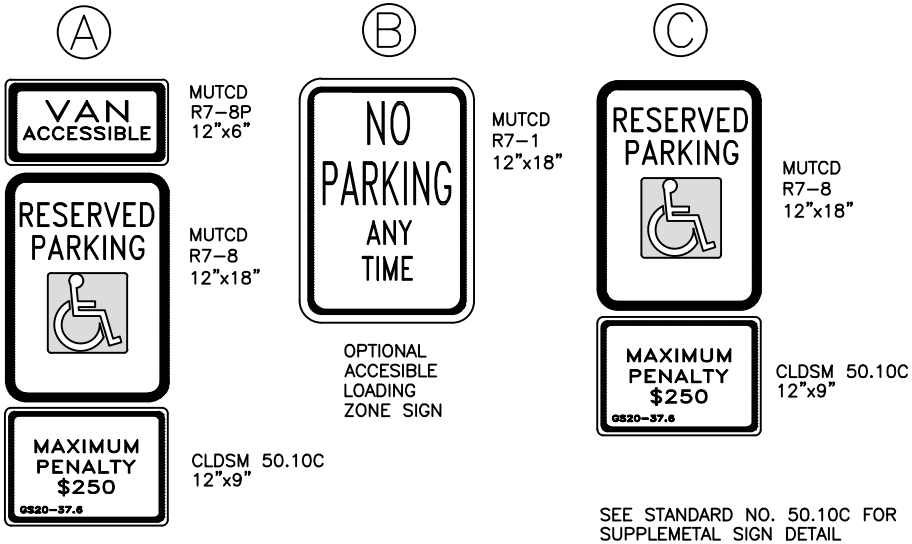

SEE STANDARD NO. 50.10C FOR SUPPLEMETAL SIGN DETAIL

NOT TO SCALE

Concord NORTH CAROLINA High Performance Living

ACCESSIBLE PARKING AND SIGNAGE STANDARDS

3–2022

DRV–120

SHEET 1 OF 1

STANDARD SIZE SPACES						
A	B	C	D	E	F	G
45°	9.0'	18.0'	12.0' ONE-WAY	8.0'	51.0'	2.0'/4.0'
60°	9.0'	18.0'	18.0' ONE-WAY	8.0'	58.0'	2.0'/4.0'
90°	9.0'	18.0'	24.0' TWO-WAY	8.0'	60.0'	2.0'/4.0'
COMPACT SPACES						
A	B	C	D	E	F	G
45°	8.0'	16.0'	N/A	8.0'	N/A	1.5'/3.0'
60°	8.0'	16.0'	N/A	8.0'	N/A	1.5'/3.0'
90°	8.0'	16.0'	N/A	8.0'	N/A	1.5'/3.0'

NOTES:

1. PARALLEL PARKING SPACES SHALL BE 9' BY 24' WITH A 20' TWO-WAY ACCESS, OR A 12' ONE-WAY ACCESS.
2. REFER TO STANDARD DRV-120 FOR ADA PARKING AND SIGNAGE STANDARDS.

KEY:

A. PARKING ANGLE
B. STALL WIDTH
C. STALL DEPTH
D. AISLE WIDTH
E. PLANTING ISLAND WIDTH (MIN. WIDTH SHOWN, REFER TO ARTICLE 7 FOR MIN. AREA.
F. PARKING BAY WIDTH
G. BUMPER OVERHANG (FRONT/REAR)

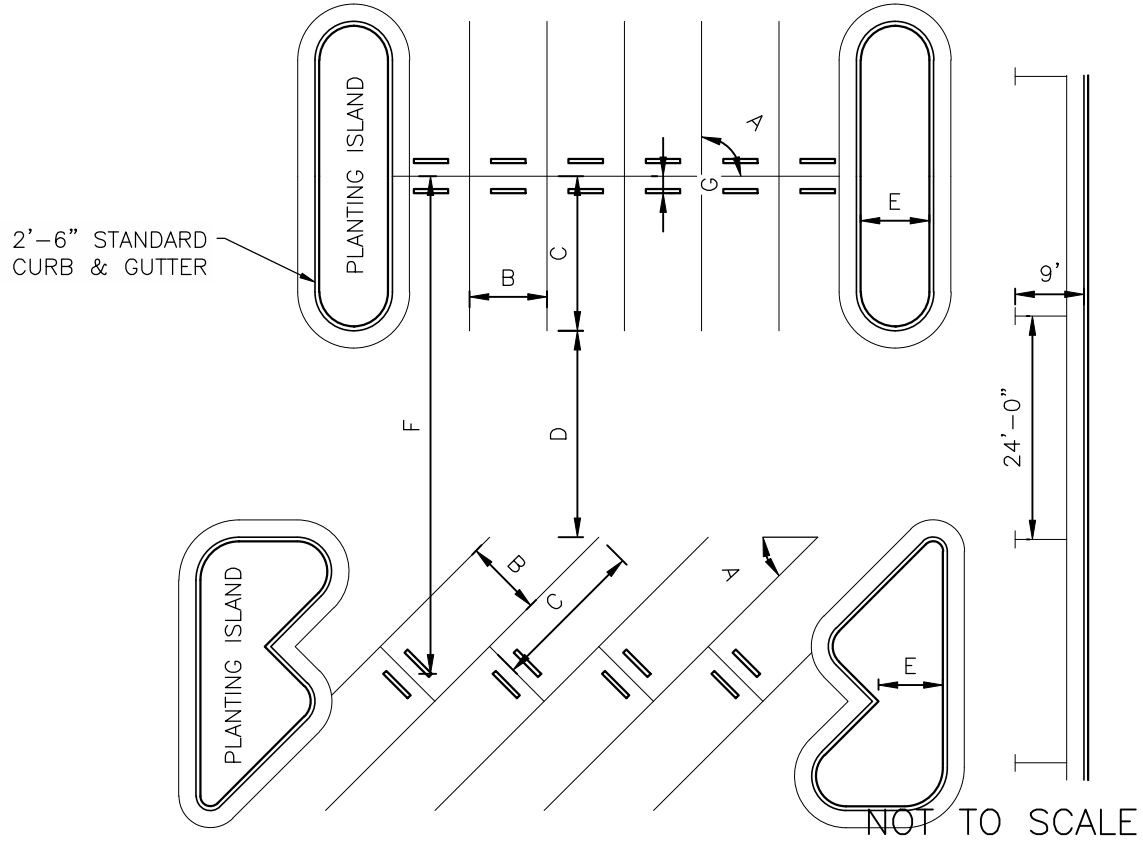

Concord NORTH CAROLINA High Performance Living

STANDARD PARKING DIMENSIONS

3-2022

DRV-121

SHEET 1 OF 1

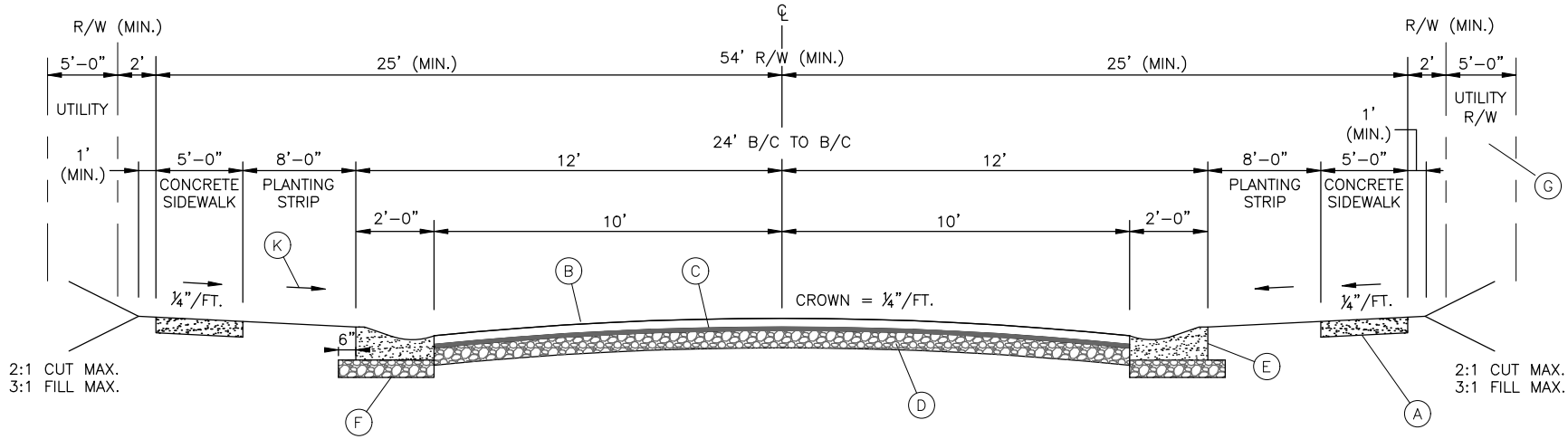

TYPICAL CROSS SECTION

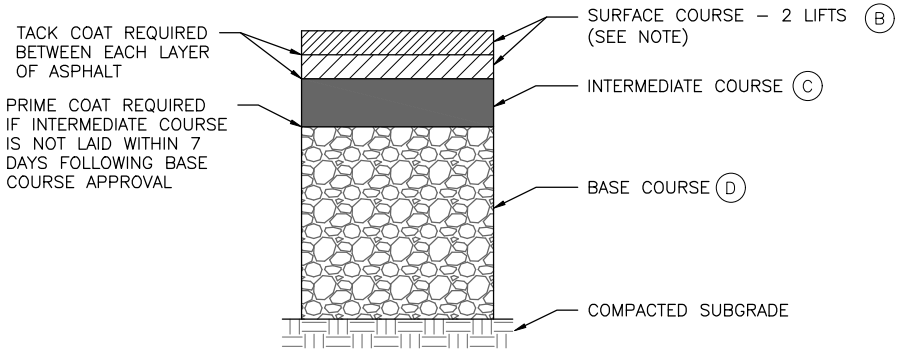

NOTE:
SURFACE COURSE TO BE INSTALLED IN TWO (2) SEPARATE LIFTS A MINIMUM OF 1" THICK. THE FIRST LIFT MUST BE INSTALLED DIRECTLY AFTER INTERMEDIATE COURSE HAS BEEN INSTALLED AND ACCEPTED. THE FINAL LIFT SHOULD BE INSTALLED AFTER ALL OTHER REQUIREMENTS FOR ACCEPTANCE HAVE BEEN MET.

TYPICAL PAVEMENT SECTION

KEY

- (A) 4" SIDEWALK*

  *DRIVEWAY APRON AND SIDEWALK AT DRIVEWAY CROSSINGS SHOULD BE 6" THICK
- (B) 2 ½" S9.5B SURFACE COURSE
- (C) 2.25" I–19.0C INTERMEDIATE COURSE
- (D) 8" COMPACTED AGGREGATE BASE COURSE OR 4" B–25.0C BASE COURSE
- (E) 2'–0" VALLEY GUTTER
- (F) 6" COMPACTED AGGREGATE BASE COURSE OR 4" B–25.0C BASE COURSE
- (G) ADDITIONAL UTILITY R/W OR EASEMENT TO BE DETERMINED BY APPLICABLE PARTIES
- (K) PLANTING STRIP ADJACENT TO SIDEWALK SHALL BE GRADED TO 1/4" PER FOOT (MIN.) TO 1–1/4" PER FOOT (MAX.). PRIOR APPROVAL REQUIRED FOR STEEPER GRADES.

NOT TO SCALE

Concord NORTH CAROLINA
High Performance Living

LOCAL RESIDENTIAL STREET

3–2022
STR–101
SHEET 1 OF 1

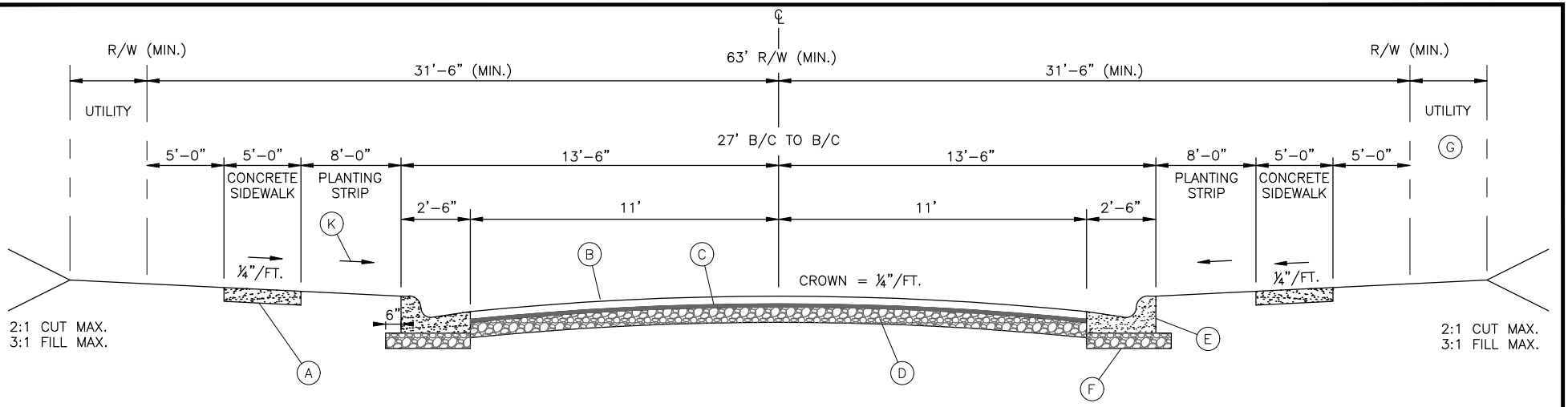

TYPICAL CROSS SECTION

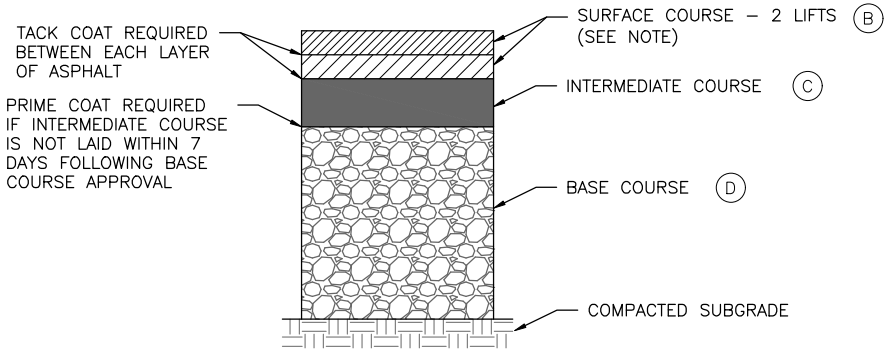

NOTE:
SURFACE COURSE TO BE INSTALLED IN TWO (2) SEPARATE LIFTS A MINIMUM OF 1.5" THICK. THE FIRST LIFT MUST BE INSTALLED DIRECTLY AFTER INTERMEDIATE COURSE HAS BEEN INSTALLED AND ACCEPTED. THE FINAL LIFT SHOULD BE INSTALLED AFTER ALL OTHER REQUIREMENTS FOR ACCEPTANCE HAVE BEEN MET.

TYPICAL PAVEMENT SECTION

KEY

(A) 4" SIDEWALK

*DRIVEWAY APRON AND SIDEWALK AT DRIVEWAY CROSSINGS SHOULD BE 6" THICK

(B) 3" S9.5B SURFACE COURSE

(C) 2.25" I–19.0C INTERMEDIATE COURSE

(D) 10" COMPACTED AGGREGATE BASE COURSE OR 5" B–25.0C

(E) 2'–6" STANDARD CURB AND GUTTER

(F) 6" COMPACTED AGGREGATE BASE COURSE OR 4" B–25.0C BASE COURSE

(G) ADDITIONAL UTILITY R/W OR EASEMENT TO BE DETERMINED BY APPLICABLE PARTIES

(K) PLANTING STRIP ADJACENT TO SIDEWALK SHALL BE GRADED TO 1/4" PER FOOT (MIN.) TO 1–1/4" PER FOOT (MAX.). PRIOR APPROVAL REQUIRED FOR STEEPER GRADES.

NOT TO SCALE

Concord NORTH CAROLINA High Performance Living

RESIDENTIAL COLLECTOR STREET

3–2022

STR–102

SHEET 1 OF 1

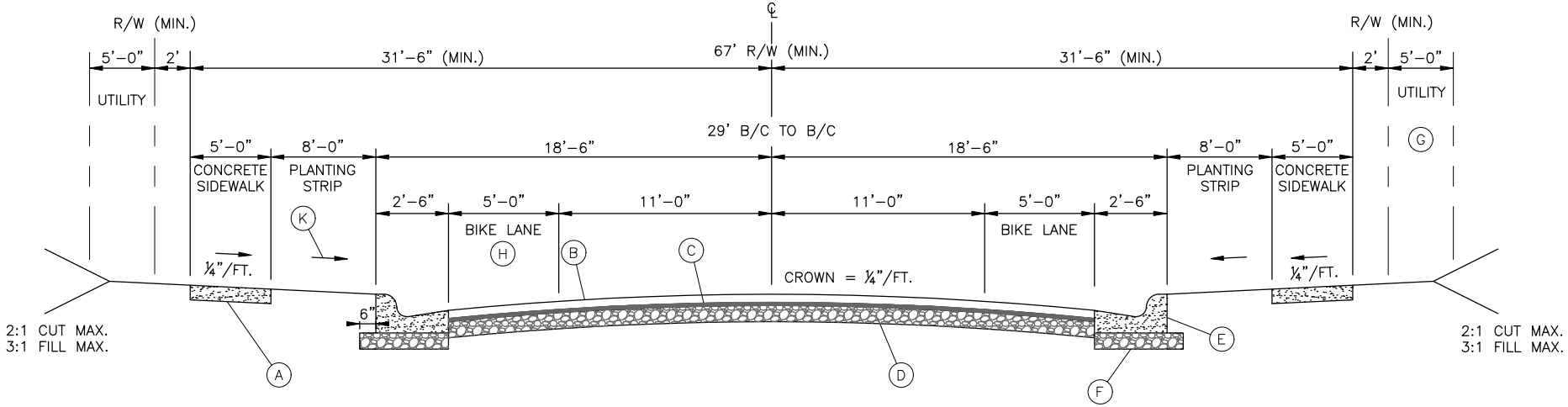

TYPICAL CROSS SECTION

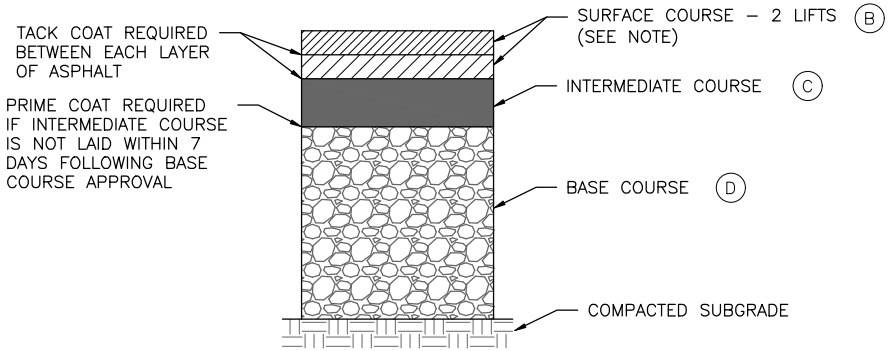

NOTE:
SURFACE COURSE TO BE INSTALLED IN TWO (2) SEPARATE LIFTS A MINIMUM OF 1.5" THICK. THE FIRST LIFT MUST BE INSTALLED DIRECTLY AFTER INTERMEDIATE COURSE HAS BEEN INSTALLED AND ACCEPTED. THE FINAL LIFT SHOULD BE INSTALLED AFTER ALL OTHER REQUIREMENTS FOR ACCEPTANCE HAVE BEEN MET.

TYPICAL PAVEMENT SECTION

KEY

- (A) 4" SIDEWALK
  - *DRIVEWAY APRON AND SIDEWALK AT DRIVEWAY CROSSINGS SHOULD BE 6" THICK
- (B) 3" S9.5B SURFACE COURSE
- (C) 2.25" I–19.0C INTERMEDIATE COURSE
- (D) 10" COMPACTED AGGREGATE BASE COURSE OR 5" B–25.0C
- (E) 2'–6" STANDARD CURB AND GUTTER
- (F) 6" COMPACTED AGGREGATE BASE COURSE OR 4" B–25.0C BASE COURSE
- (G) ADDITIONAL UTILITY R/W OR EASEMENT TO BE DETERMINED BY APPLICABLE PARTIES
- (H) TEMPORARY STRIPING FOR BIKE LANE SHOULD BE INSTALLED ONCE INITIAL SURFACE LIFT IS APPLIED, PERMANENT STRIPING SHOULD BE INSTALLED AFTER FINAL SURFACE LIFT IS APPLIED
- (K) PLANTING STRIP ADJACENT TO SIDEWALK SHALL BE GRADED TO 1/4" PER FOOT (MIN.) TO 1–1/4" PER FOOT (MAX.). PRIOR APPROVAL REQUIRED FOR STEEPER GRADES.

NOT TO SCALE

Concord NORTH CAROLINA
High Performance Living

RESIDENTIAL COLLECTOR STREET WITH BICYCLE LANES

3–2022
STR–103
SHEET 1 OF 1

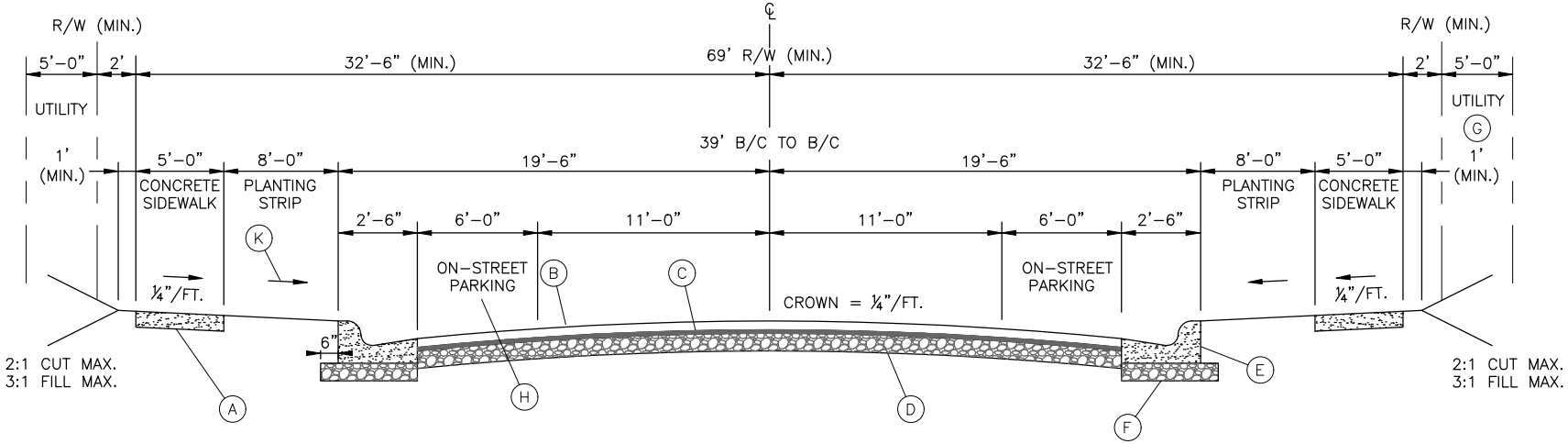

TYPICAL CROSS SECTION

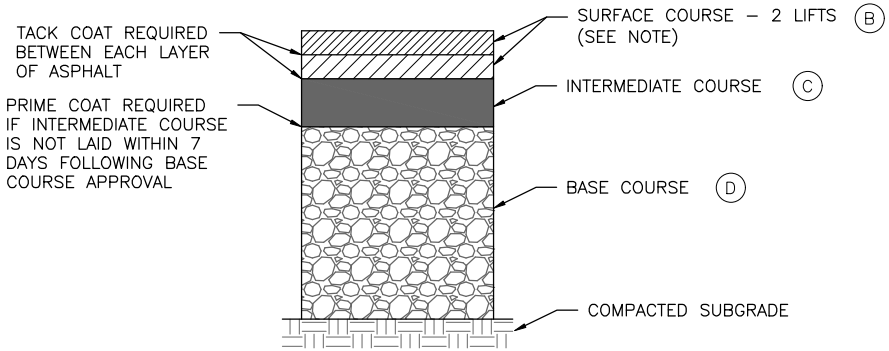

NOTE:
SURFACE COURSE TO BE INSTALLED IN TWO (2) SEPARATE LIFTS A MINIMUM OF 1.5" THICK. THE FIRST LIFT MUST BE INSTALLED DIRECTLY AFTER INTERMEDIATE COURSE HAS BEEN INSTALLED AND ACCEPTED. THE FINAL LIFT SHOULD BE INSTALLED AFTER ALL OTHER REQUIREMENTS FOR ACCEPTANCE HAVE BEEN MET.

TYPICAL PAVEMENT SECTION

KEY

- (A) 4" SIDEWALK
  - *DRIVEWAY APRON AND SIDEWALK AT DRIVEWAY CROSSINGS SHOULD BE 6" THICK
- (B) 3" S9.5B SURFACE COURSE
- (C) 2.25" I–19.0C INTERMEDIATE COURSE
- (D) 10" COMPACTED AGGREGATE BASE COURSE OR 5" B–25.0C
- (E) 2'–6" STANDARD CURB AND GUTTER
- (F) 6" COMPACTED AGGREGATE BASE COURSE OR 4" B–25.0C BASE COURSE
- (G) ADDITIONAL UTILITY R/W OR EASEMENT TO BE DETERMINED BY APPLICABLE PARTIES
- (H) TEMPORARY STRIPING FOR PARKING SHOULD BE INSTALLED ONCE INITIAL SURFACE LIFT IS APPLIED, PERMANENT STRIPING SHOULD BE INSTALLED AFTER FINAL SURFACE LIFT IS APPLIED
- (K) PLANTING STRIP ADJACENT TO SIDEWALK SHALL BE GRADED TO 1/4" PER FOOT (MIN.) TO 1–1/4" PER FOOT (MAX.). PRIOR APPROVAL REQUIRED FOR STEEPER GRADES.

NOT TO SCALE

Concord NORTH CAROLINA
High Performance Living

RESIDENTIAL COLLECTOR STREET WITH PARALLEL PARKING

3–2022
STR–104
SHEET 1 OF 1

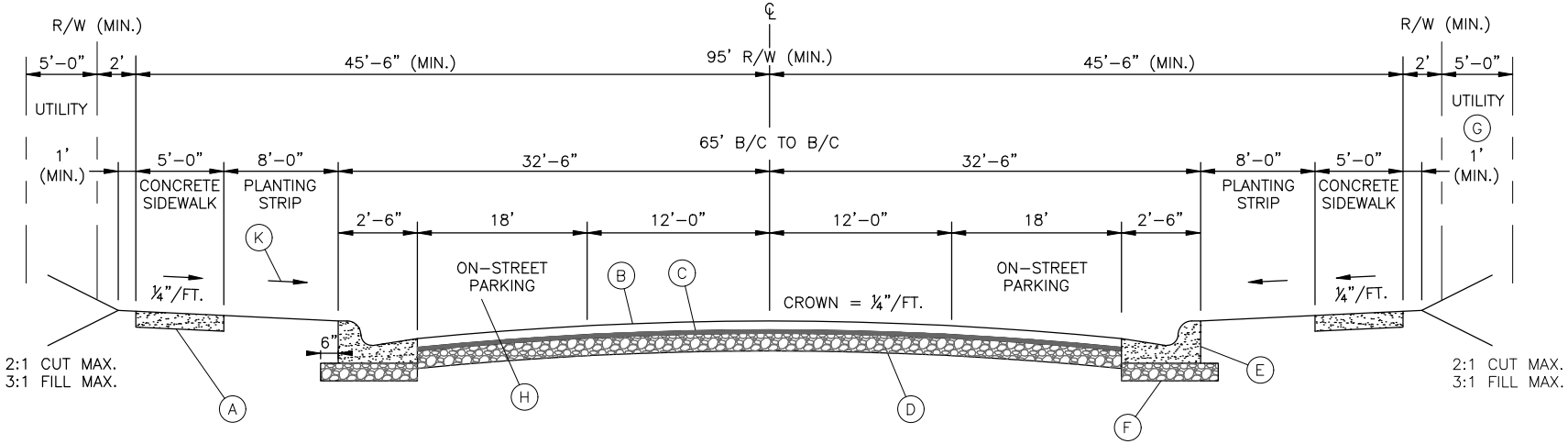

TYPICAL CROSS SECTION

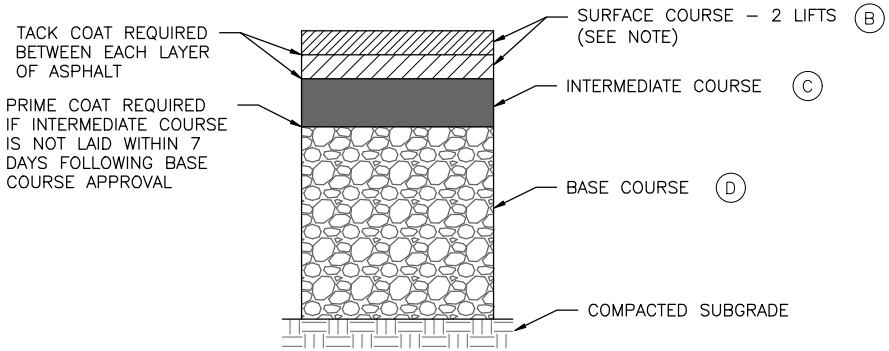

NOTE:
SURFACE COURSE TO BE INSTALLED IN TWO (2) SEPARATE LIFTS A MINIMUM OF 1.5" THICK. THE FIRST LIFT MUST BE INSTALLED DIRECTLY AFTER INTERMEDIATE COURSE HAS BEEN INSTALLED AND ACCEPTED. THE FINAL LIFT SHOULD BE INSTALLED AFTER ALL OTHER REQUIREMENTS FOR ACCEPTANCE HAVE BEEN MET.

TYPICAL PAVEMENT SECTION

KEY

- (A) 4" SIDEWALK
  - *DRIVEWAY APRON AND SIDEWALK AT DRIVEWAY CROSSINGS SHOULD BE 6" THICK
- (B) 3" S9.5B SURFACE COURSE
- (C) 2.25" I–19.0C INTERMEDIATE COURSE
- (D) 10" COMPACTED AGGREGATE BASE COURSE OR 5" B–25.0C
- (E) 2'–6" STANDARD CURB AND GUTTER
- (F) 6" COMPACTED AGGREGATE BASE COURSE OR 4" B–25.0C BASE COURSE
- (G) ADDITIONAL UTILITY R/W OR EASEMENT TO BE DETERMINED BY APPLICABLE PARTIES
- (H) TEMPORARY STRIPING FOR PARKING SHOULD BE INSTALLED ONCE INITIAL SURFACE LIFT IS APPLIED, PERMANENT STRIPING SHOULD BE INSTALLED AFTER FINAL SURFACE LIFT IS APPLIED
- (K) PLANTING STRIP ADJACENT TO SIDEWALK SHALL BE GRADED TO 1/4" PER FOOT (MIN.) TO 1–1/4" PER FOOT (MAX.). PRIOR APPROVAL REQUIRED FOR STEEPER GRADES.

NOT TO SCALE

Concord NORTH CAROLINA High Performance Living

RESIDENTIAL COLLECTOR STREET WITH 45° REVERSE ANGLE PARKING

3–2022
STR–105
SHEET 1 OF 1

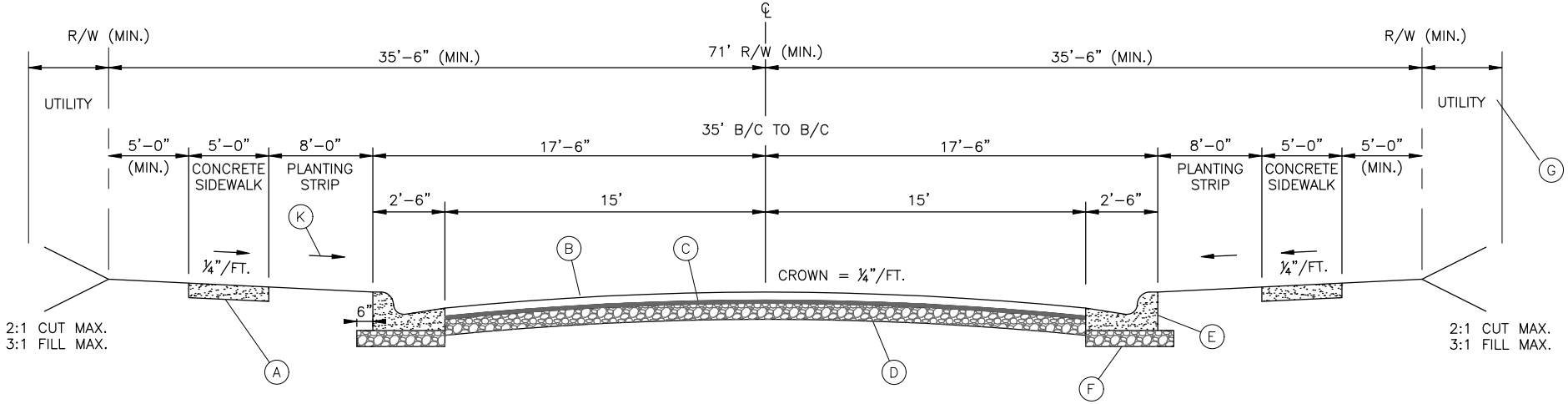

TYPICAL CROSS SECTION

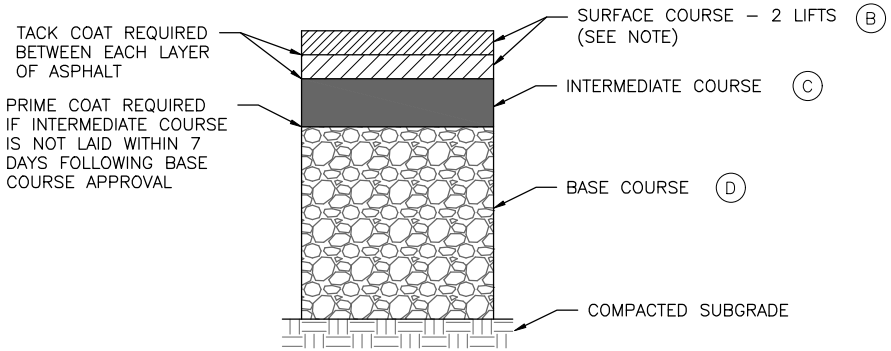

NOTE:
SURFACE COURSE TO BE INSTALLED IN TWO (2) SEPARATE LIFTS A MINIMUM OF 1.5" THICK. THE FIRST LIFT MUST BE INSTALLED DIRECTLY AFTER INTERMEDIATE COURSE HAS BEEN INSTALLED AND ACCEPTED. THE FINAL LIFT SHOULD BE INSTALLED AFTER ALL OTHER REQUIREMENTS FOR ACCEPTANCE HAVE BEEN MET.

TYPICAL PAVEMENT SECTION

KEY

- (A) 4" SIDEWALK
  - *DRIVEWAY APRON AND SIDEWALK AT DRIVEWAY CROSSINGS SHOULD BE 6" THICK
- (B) PER APPROVED PAVEMENT DESIGN (3" S9.5B SURFACE COURSE MIN.)
- (C) PER APPROVED PAVEMENT DESIGN (2.25" I–19.0C INTERMEDIATE COURSE MIN.)
- (D) PER APPROVED PAVEMENT DESIGN (10" COMPACTED AGGREGATE BASE COURSE OR 5" B–25.0C MIN.)
- (E) 2'–6" STANDARD CURB AND GUTTER
- (F) 6" COMPACTED AGGREGATE BASE COURSE OR 4" B–25.0C BASE COURSE
- (G) ADDITIONAL UTILITY R/W OR EASEMENT TO BE DETERMINED BY APPLICABLE PARTIES
- (K) PLANTING STRIP ADJACENT TO SIDEWALK SHALL BE GRADED TO 1/4" PER FOOT (MIN.) TO 1–1/4" PER FOOT (MAX.). PRIOR APPROVAL REQUIRED FOR STEEPER GRADES

NOT TO SCALE

Concord NORTH CAROLINA High Performance Living

NON–RESIDENTIAL COLLECTOR STREET

3–2022

STR–106

SHEET 1 OF 1

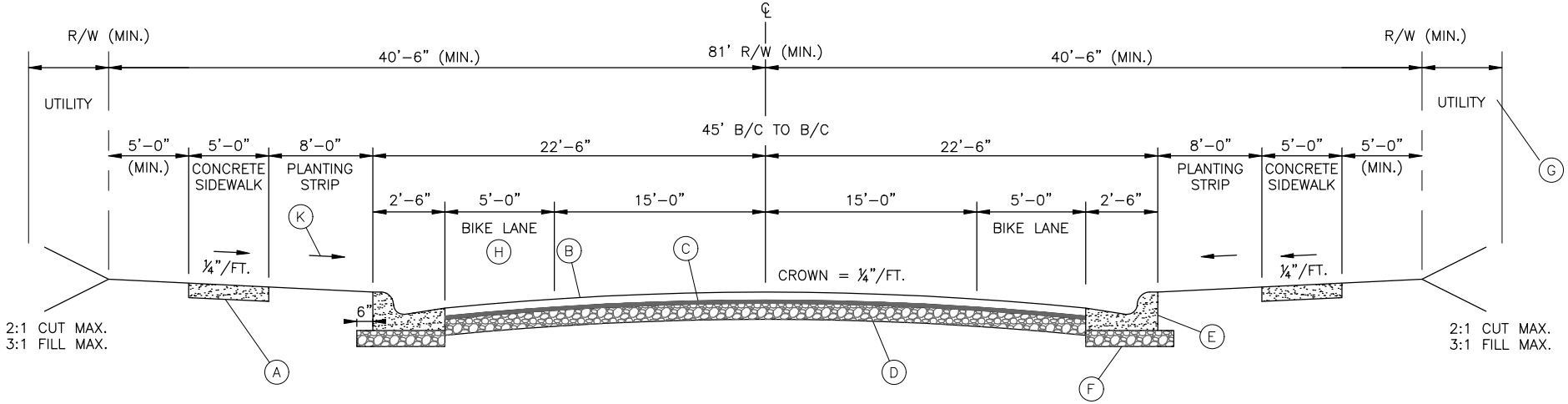

TYPICAL CROSS SECTION

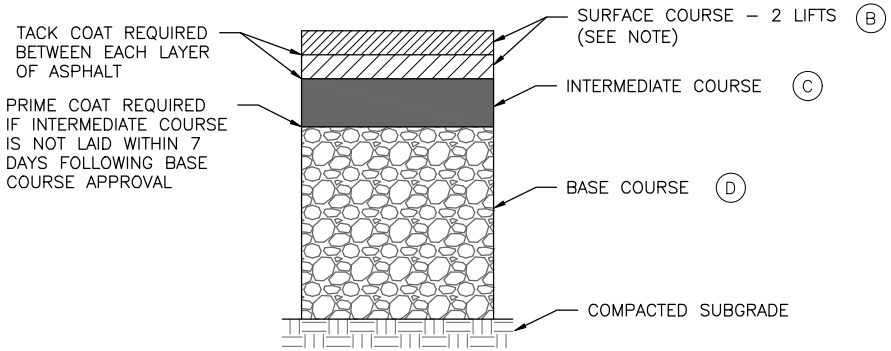

NOTE:
SURFACE COURSE TO BE INSTALLED IN TWO (2) SEPARATE LIFTS A MINIMUM OF 1.5" THICK. THE FIRST LIFT MUST BE INSTALLED DIRECTLY AFTER INTERMEDIATE COURSE HAS BEEN INSTALLED AND ACCEPTED. THE FINAL LIFT SHOULD BE INSTALLED AFTER ALL OTHER REQUIREMENTS FOR ACCEPTANCE HAVE BEEN MET.

TYPICAL PAVEMENT SECTION

KEY

- (A) 4" SIDEWALK
  - *DRIVEWAY APRON AND SIDEWALK AT DRIVEWAY CROSSINGS SHOULD BE 6" THICK
- (B) PER APPROVED PAVEMENT DESIGN (3" S9.5B SURFACE COURSE MIN.)
- (C) PER APPROVED PAVEMENT DESIGN (2.25" I–19.0C INTERMEDIATE COURSE MIN.)
- (D) PER APPROVED PAVEMENT DESIGN (10" COMPACTED AGGREGATE BASE COURSE OR 5" B–25.0C MIN.)
- (E) 2'–6" STANDARD CURB AND GUTTER
- (F) 6" COMPACTED AGGREGATE BASE COURSE OR 4" B–25.0C BASE COURSE
- (G) ADDITIONAL UTILITY R/W OR EASEMENT TO BE DETERMINED BY APPLICABLE PARTIES
- (H) TEMPORARY STRIPING SHOULD BE INSTALLED ONCE INITIAL SURFACE LIFT IS APPLIED, PERMANENT STRIPING SHOULD BE INSTALLED AFTER FINAL SURFACE LIFT IS APPLIED
- (K) PLANTING STRIP ADJACENT TO SIDEWALK SHALL BE GRADED TO 1/4" PER FOOT (MIN.) TO 1–1/4" PER FOOT (MAX.). PRIOR APPROVAL REQUIRED FOR STEEPER GRADES

NOT TO SCALE

Concord NORTH CAROLINA High Performance Living

NON–RESIDENTIAL COLLECTOR STREET WITH BICYCLE LANES

3–2022

STR–107

SHEET 1 OF 1

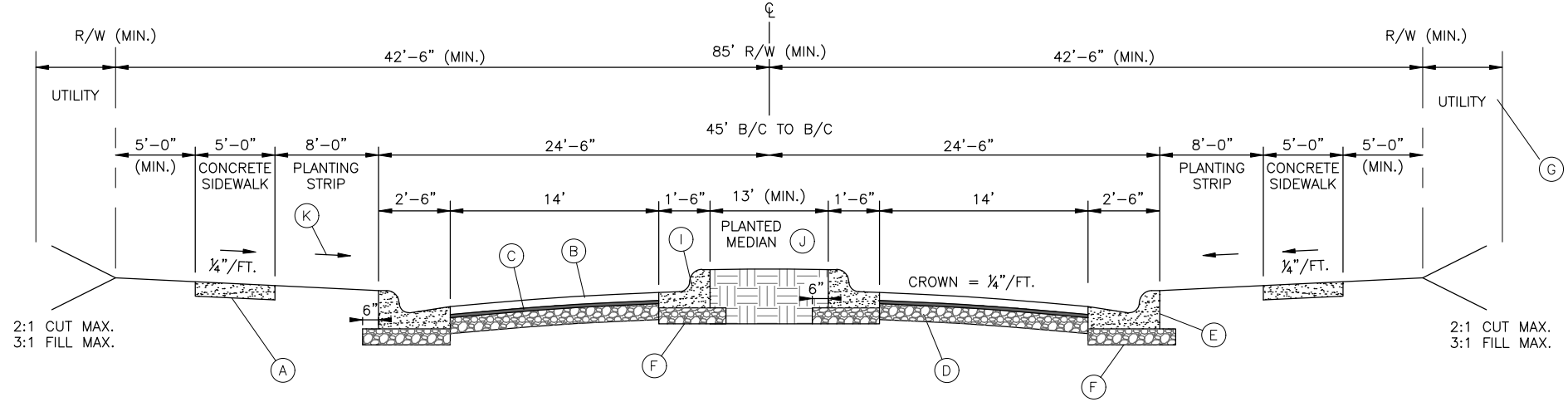

TYPICAL CROSS SECTION

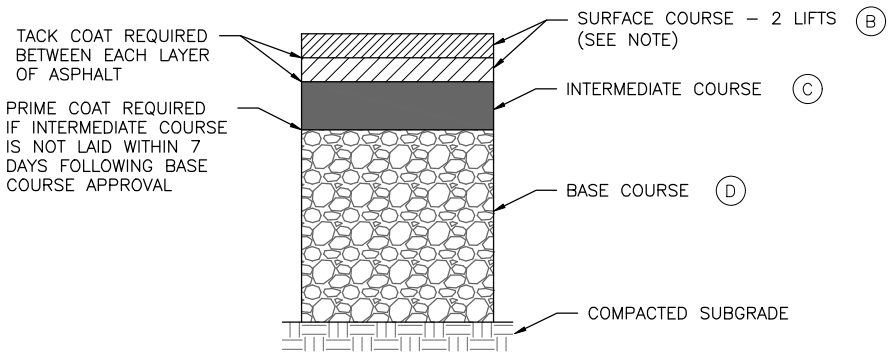

NOTE:
SURFACE COURSE TO BE INSTALLED IN TWO (2) SEPARATE LIFTS A MINIMUM OF 1.5" THICK. THE FIRST LIFT MUST BE INSTALLED DIRECTLY AFTER INTERMEDIATE COURSE HAS BEEN INSTALLED AND ACCEPTED. THE FINAL LIFT SHOULD BE INSTALLED AFTER ALL OTHER REQUIREMENTS FOR ACCEPTANCE HAVE BEEN MET.

TYPICAL PAVEMENT SECTION

KEY

- (A) 4" SIDEWALK

  *DRIVEWAY APRON AND SIDEWALK AT DRIVEWAY CROSSINGS SHOULD BE 6" THICK
- (B) PER APPROVED PAVEMENT DESIGN (3" S9.5B SURFACE COURSE MIN.)
- (C) PER APPROVED PAVEMENT DESIGN (2.25" I–19.0C INTERMEDIATE COURSE MIN.)
- (D) PER APPROVED PAVEMENT DESIGN (10" COMPACTED AGGREGATE BASE COURSE OR 5" B–25.0C MIN.)
- (E) 2'–6" STANDARD CURB AND GUTTER
- (F) 6" COMPACTED AGGREGATE BASE COURSE OR 4" B–25.0C BASE COURSE
- (G) ADDITIONAL UTILITY R/W OR EASEMENT TO BE DETERMINED BY APPLICABLE PARTIES
- (H) TEMPORARY STRIPING SHOULD BE INSTALLED ONCE INITIAL SURFACE LIFT IS APPLIED, PERMANENT STRIPING SHOULD BE INSTALLED AFTER FINAL SURFACE LIFT IS APPLIED
- (I) 1'–6" STANDARD CURB AND GUTTER
- (J) PLANTED MEDIAN, WIDTH VARIES BASED ON PROPOSED PLANTINGS. LANDSCAPING TO BE MAINTAINED BY PROPERTY OWNER'S ASSOCIATION WITH EXECUTED ENCROACHMENT AGREEMENT WITH CITY
- (K) PLANTING STRIP ADJACENT TO SIDEWALK SHALL BE GRADED TO 1/4" PER FOOT (MIN.) TO 1–1/4" PER FOOT (MAX.). PRIOR APPROVAL REQUIRED FOR STEEPER GRADES

NOT TO SCALE

Concord NORTH CAROLINA High Performance Living

NON–RESIDENTIAL COLLECTOR STREET DIVIDED WITH PLANTED MEDIAN

3–2022

STR–108

SHEET 1 OF 1

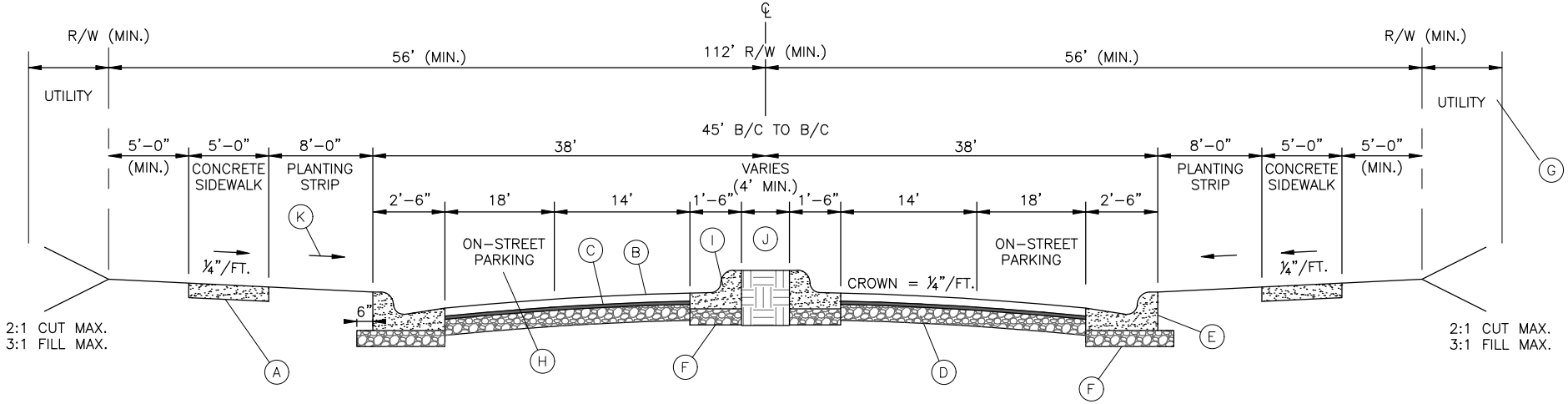

TYPICAL CROSS SECTION

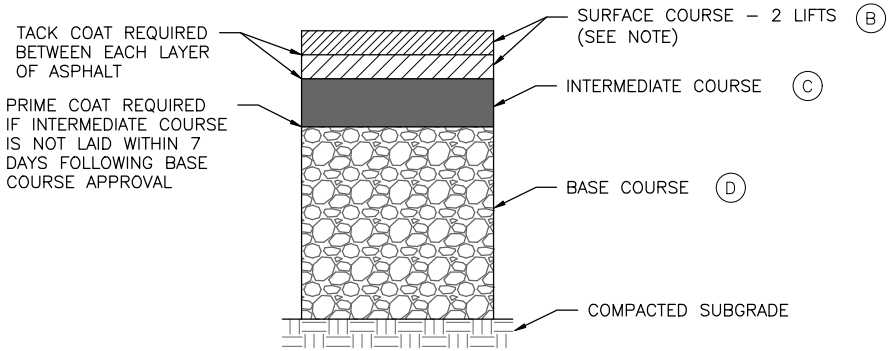

NOTE:
SURFACE COURSE TO BE INSTALLED IN TWO (2) SEPARATE LIFTS A MINIMUM OF 1.5" THICK. THE FIRST LIFT MUST BE INSTALLED DIRECTLY AFTER INTERMEDIATE COURSE HAS BEEN INSTALLED AND ACCEPTED. THE FINAL LIFT SHOULD BE INSTALLED AFTER ALL OTHER REQUIREMENTS FOR ACCEPTANCE HAVE BEEN MET.

TYPICAL PAVEMENT SECTION

KEY

- (A) 4" SIDEWALK

  *DRIVEWAY APRON AND SIDEWALK AT DRIVEWAY CROSSINGS SHOULD BE 6" THICK
- (B) PER APPROVED PAVEMENT DESIGN (3" S9.5B SURFACE COURSE MIN.)
- (C) PER APPROVED PAVEMENT DESIGN (2.25" I-19.0C INTERMEDIATE COURSE MIN.)
- (D) PER APPROVED PAVEMENT DESIGN (10" COMPACTED AGGREGATE BASE COURSE OR 5" B-25.0C MIN.)
- (E) 2'-6" STANDARD CURB AND GUTTER
- (F) 6" COMPACTED AGGREGATE BASE COURSE OR 4" B-25.0C BASE COURSE
- (G) ADDITIONAL UTILITY R/W OR EASEMENT TO BE DETERMINED BY APPLICABLE PARTIES
- (H) TEMPORARY STRIPING SHOULD BE INSTALLED ONCE INITIAL SURFACE LIFT IS APPLIED, PERMANENT STRIPING SHOULD BE INSTALLED AFTER FINAL SURFACE LIFT IS APPLIED
- (I) 1'-6" STANDARD CURB AND GUTTER
- (J) PLANTED MEDIAN, WIDTH VARIES BASED ON PROPOSED PLANTINGS. LANDSCAPING TO BE MAINTAINED BY PROPERTY OWNER'S ASSOCIATION WITH EXECUTED ENCROACHMENT AGREEMENT WITH CITY
- (K) PLANTING STRIP ADJACENT TO SIDEWALK SHALL BE GRADED TO 1/4" PER FOOT (MIN.) TO 1-1/4" PER FOOT (MAX.). PRIOR APPROVAL REQUIRED FOR STEEPER GRADES

NOT TO SCALE

Concord NORTH CAROLINA High Performance Living

NON-RESIDENTIAL COLLECTOR STREET WITH 45° REVERSE ANGLE PARKING

3-2022

STR-109

SHEET 1 OF 1

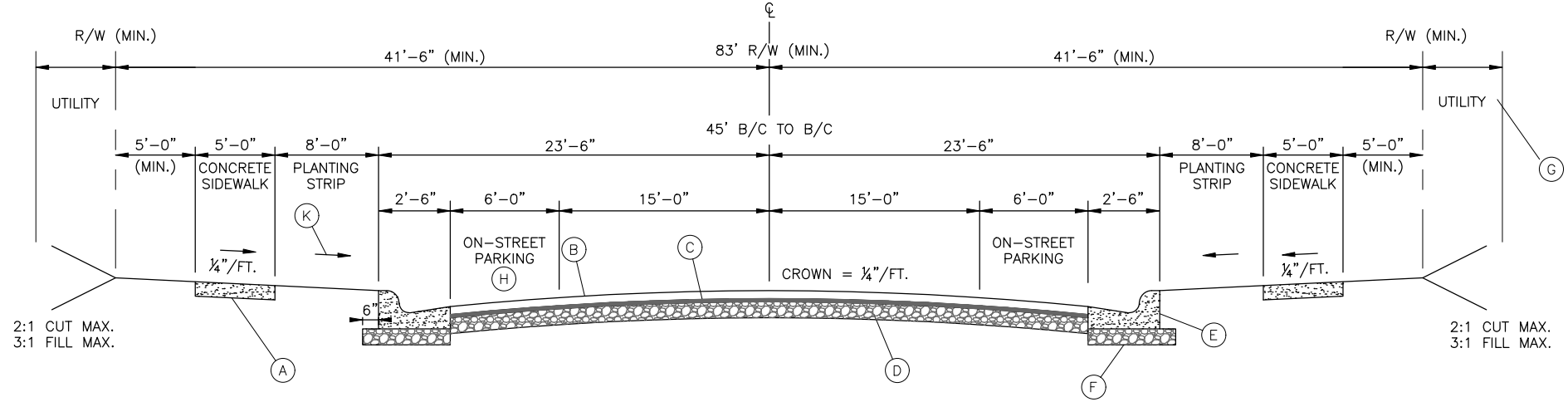

TYPICAL CROSS SECTION

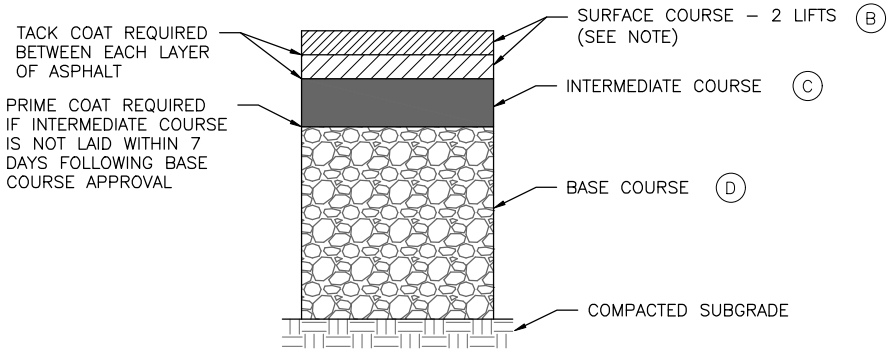

NOTE:
SURFACE COURSE TO BE INSTALLED IN TWO (2) SEPARATE LIFTS A MINIMUM OF 1.5" THICK. THE FIRST LIFT MUST BE INSTALLED DIRECTLY AFTER INTERMEDIATE COURSE HAS BEEN INSTALLED AND ACCEPTED. THE FINAL LIFT SHOULD BE INSTALLED AFTER ALL OTHER REQUIREMENTS FOR ACCEPTANCE HAVE BEEN MET.

TYPICAL PAVEMENT SECTION

KEY

- (A) 4" SIDEWALK
  - *DRIVEWAY APRON AND SIDEWALK AT DRIVEWAY CROSSINGS SHOULD BE 6" THICK
- (B) PER APPROVED PAVEMENT DESIGN (3" S9.5B SURFACE COURSE MIN.)
- (C) PER APPROVED PAVEMENT DESIGN (2.25" I–19.0C INTERMEDIATE COURSE MIN.)
- (D) PER APPROVED PAVEMENT DESIGN (10" COMPACTED AGGREGATE BASE COURSE OR 5" B–25.0C MIN.)
- (E) 2'–6" STANDARD CURB AND GUTTER
- (F) 6" COMPACTED AGGREGATE BASE COURSE OR 4" B–25.0C BASE COURSE
- (G) ADDITIONAL UTILITY R/W OR EASEMENT TO BE DETERMINED BY APPLICABLE PARTIES
- (H) TEMPORARY STRIPING SHOULD BE INSTALLED ONCE INITIAL SURFACE LIFT IS APPLIED, PERMANENT STRIPING SHOULD BE INSTALLED AFTER FINAL SURFACE LIFT IS APPLIED
- (K) PLANTING STRIP ADJACENT TO SIDEWALK SHALL BE GRADED TO 1/4" PER FOOT (MIN.) TO 1–1/4" PER FOOT (MAX.). PRIOR APPROVAL REQUIRED FOR STEEPER GRADES.

NOT TO SCALE

Concord NORTH CAROLINA High Performance Living

NON–RESIDENTIAL COLLECTOR STREET WITH PARALLEL PARKING

3–2022

STR–110

SHEET 1 OF 1

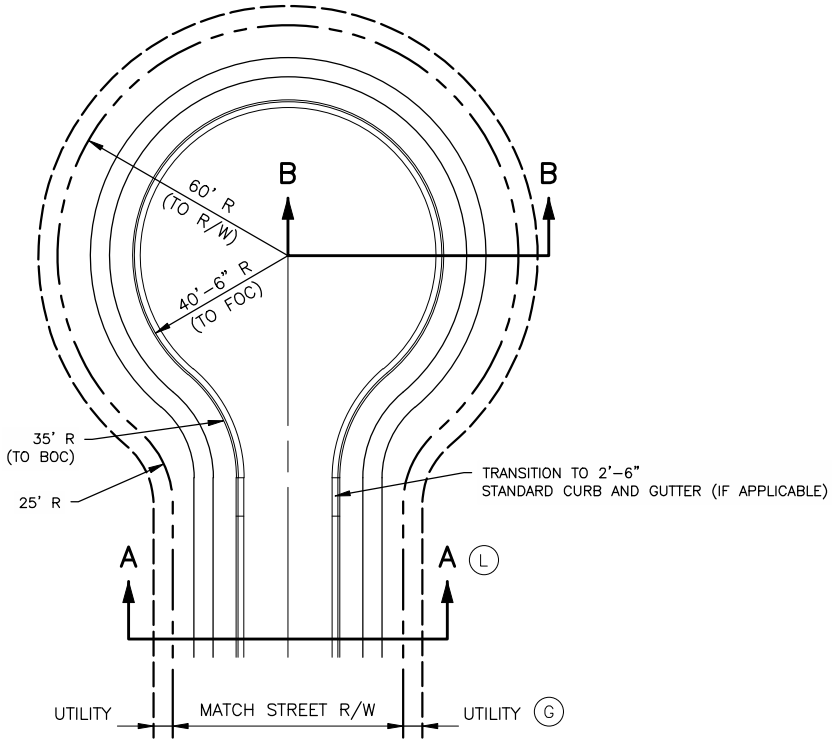

PLAN

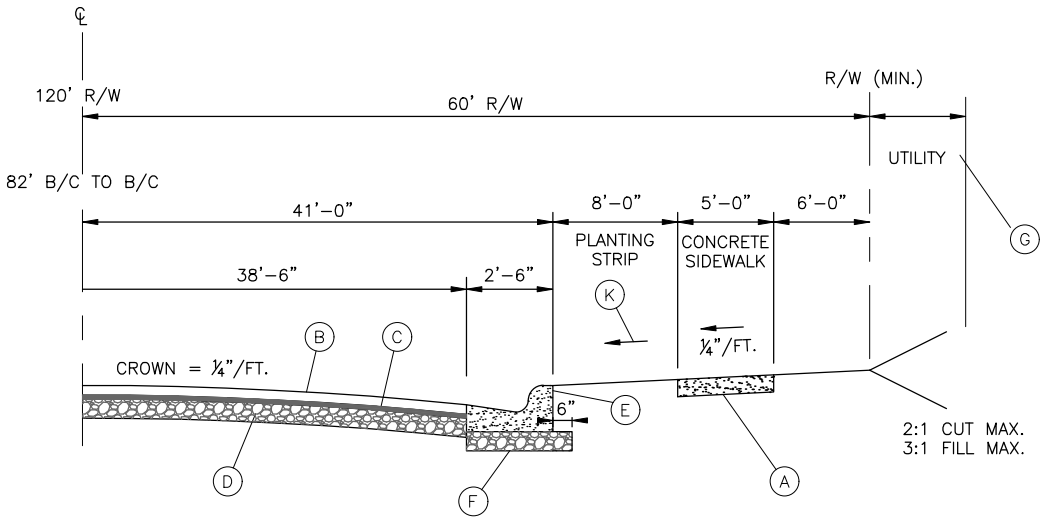

SECTION B – B

NOTES

1. THIS DETAIL ONLY APPLIES TO RESIDENTIAL CUL–DE–SACS WITH A LENGTH LESS THAN 150' FROM THE CENTERLINE OF THE INTERSECTING STREET PROVIDING ACCESS TO THE CENTER TERMINUS OF THE CUL–DE–SAC.

KEY

- (A) 4" SIDEWALK
  - *DRIVEWAY APRON AND SIDEWALK AT DRIVEWAY CROSSINGS SHOULD BE 6" THICK
- (B) TO MATCH TYPICAL SECTION OF ADJOINING STREET
- (C) TO MATCH TYPICAL SECTION OF ADJOINING STREET
- (D) TO MATCH TYPICAL SECTION OF ADJOINING STREET
- (E) 2'–6" STANDARD CURB AND GUTTER
- (F) 6" COMPACTED AGGREGATE BASE COURSE OR 4" B–25.0C BASE COURSE
- (G) ADDITIONAL UTILITY R/W OR EASEMENT TO BE DETERMINED BY APPLICABLE PARTIES
- (K) PLANTING STRIP ADJACENT TO SIDEWALK SHALL BE GRADED TO 1/4" PER FOOT (MIN.) TO 1–1/4" PER FOOT (MAX.). PRIOR APPROVAL REQUIRED FOR STEEPER GRADES
- (L) SECTION A–A TO MATCH ADJOINING STREET CROSS SECTION

NOT TO SCALE

Concord NORTH CAROLINA
High Performance Living

RESIDENTIAL CUL–DE–SAC LENGTH LESS THAN 150'

3–2022

STR–111

SHEET 1 OF 1

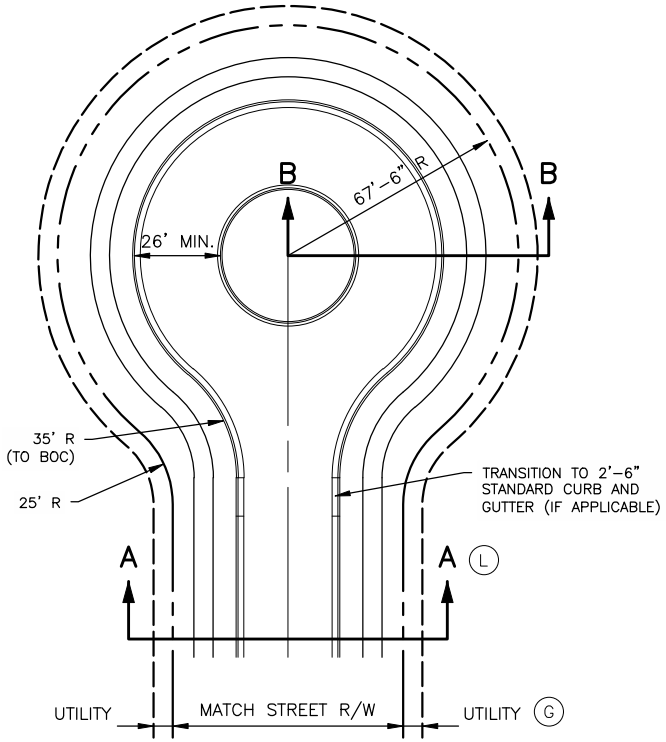

PLAN

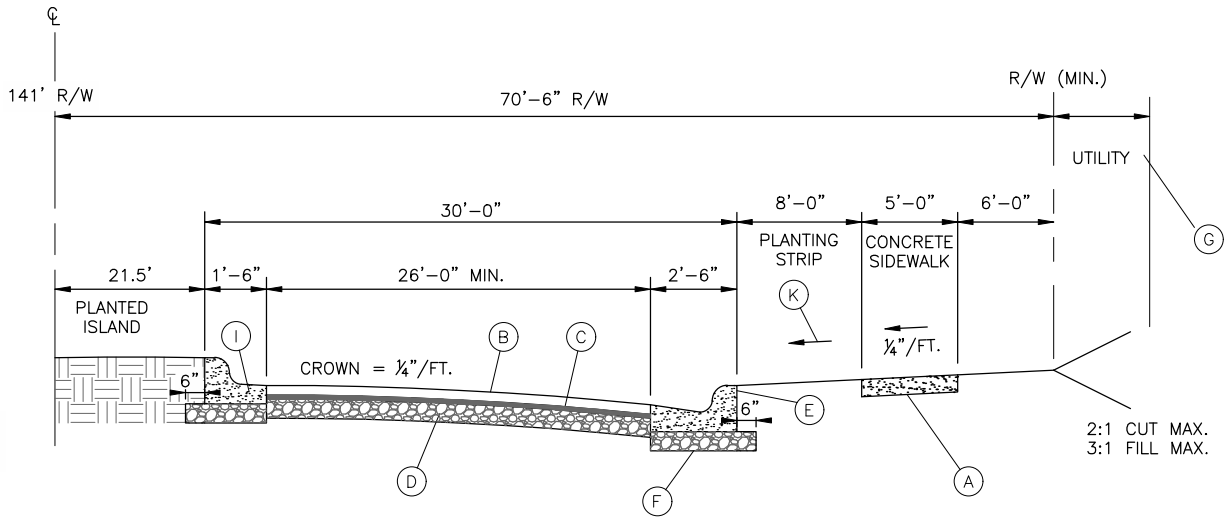

SECTION B – B

KEY

- (A) 4" SIDEWALK
  - *DRIVEWAY APRON AND SIDEWALK AT DRIVEWAY CROSSINGS SHOULD BE 6" THICK
- (B) TO MATCH TYPICAL SECTION OF ADJOINING STREET
- (C) TO MATCH TYPICAL SECTION OF ADJOINING STREET
- (D) TO MATCH TYPICAL SECTION OF ADJOINING STREET
- (E) 2'-6" STANDARD CURB AND GUTTER
- (F) 6" COMPACTED AGGREGATE BASE COURSE OR 4" B-25.0C BASE COURSE
- (G) ADDITIONAL UTILITY R/W OR EASEMENT TO BE DETERMINED BY APPLICABLE PARTIES
- (I) 1'-6" STANDARD CURB AND GUTTER
- (K) PLANTING STRIP ADJACENT TO SIDEWALK SHALL BE GRADED TO 1/4" PER FOOT (MIN.) TO 1-1/4" PER FOOT (MAX.). PRIOR APPROVAL REQUIRED FOR STEEPER GRADES
- (L) SECTION A-A TO MATCH ADJOINING STREET CROSS SECTION

NOTES

1. THIS DETAIL APPLIES TO RESIDENTIAL CUL-DE-SACS WITH A LENGTH GREATER THAN 150' FROM THE CENTERLINE OF THE INTERSECTING STREET PROVIDING ACCESS TO THE CENTER TERMINUS OF THE CUL-DE-SAC.
2. PLANTINGS IN ISLAND SHOULD BE GRASS/SHRUBS WITH A MAXIMUM MATURE HEIGHT OF 3'. TREES WITH WITH A CANOPY OF 8' OR HIGHER ABOVE THE STREET SURFACE MAY BE ALLOWED AS APPROVED BY THE CITY ARBORIST.
3. LANDSCAPING AND PLANTINGS WITHIN THE ISLAND SHALL BE MAINTAINED BY THE DEVELOPER, HOMEOWNER'S ASSOCIATION OR OTHER LEGAL ENTITY THROUGH AN ENCROACHMENT AGREEMENT WITH THE CITY OF CONCORD.

NOT TO SCALE

Concord
NORTH CAROLINA
High Performance Living

RESIDENTIAL CUL-DE-SAC LENGTH GREATER THAN 150'

3-2022

STR-112

SHEET 1 OF 1

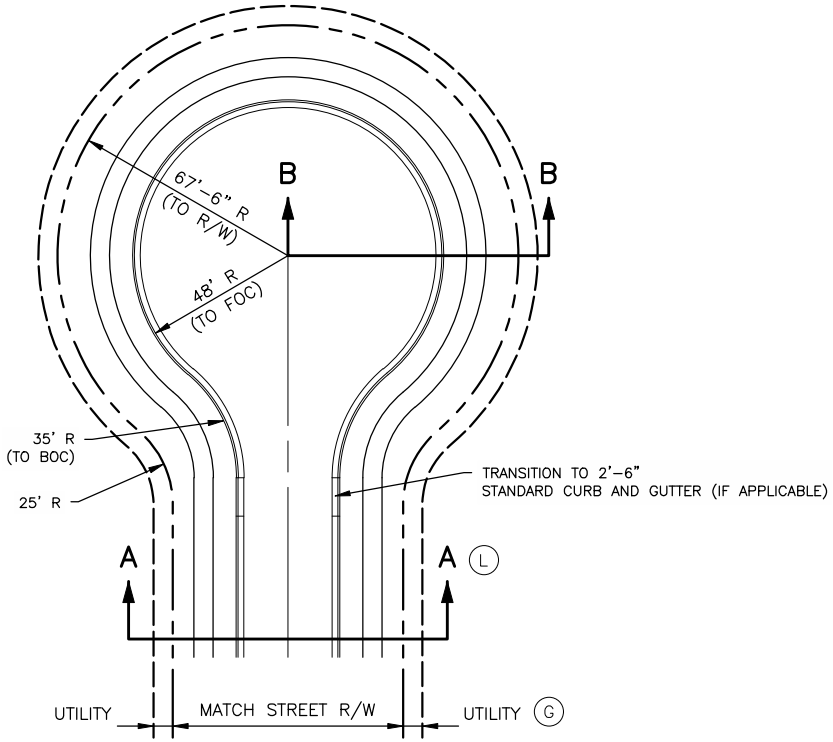

PLAN

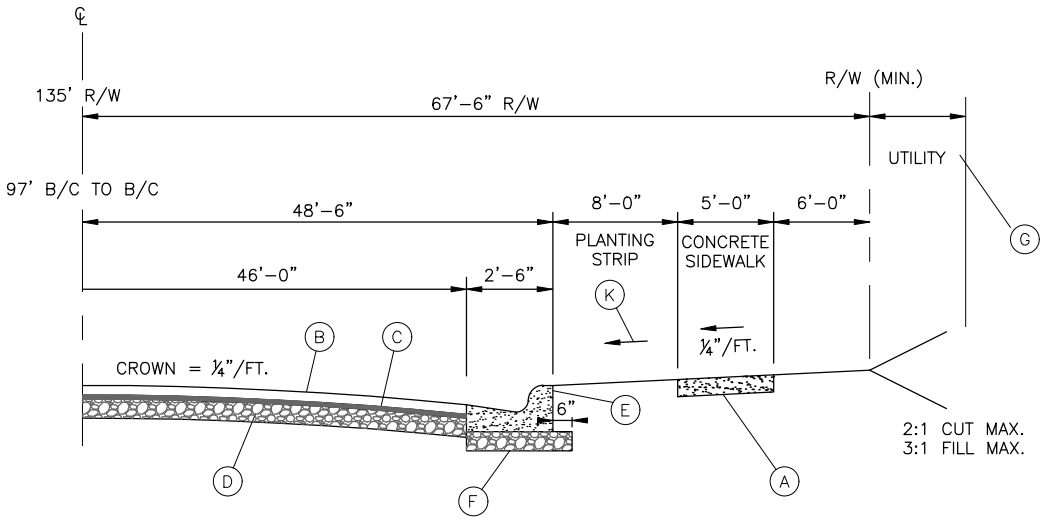

SECTION B – B

NOTES

1. THIS DETAIL APPLIES TO ALL NON-RESIDENTIAL AND MIXED USE CUL-DE-SACS OF ALL LENGTHS.

KEY

(A) 4" SIDEWALK

*DRIVEWAY APRON AND SIDEWALK AT DRIVEWAY CROSSINGS SHOULD BE 6" THICK

(B) TO MATCH TYPICAL SECTION OF ADJOINING STREET

(C) TO MATCH TYPICAL SECTION OF ADJOINING STREET

(D) TO MATCH TYPICAL SECTION OF ADJOINING STREET

(E) 2'-6" STANDARD CURB AND GUTTER

(F) 6" COMPACTED AGGREGATE BASE COURSE OR 4" B-25.0C BASE COURSE

(G) ADDITIONAL UTILITY R/W OR EASEMENT TO BE DETERMINED BY APPLICABLE PARTIES

(K) PLANTING STRIP ADJACENT TO SIDEWALK SHALL BE GRADED TO 1/4" PER FOOT (MIN.) TO 1-1/4" PER FOOT (MAX.). PRIOR APPROVAL REQUIRED FOR STEEPER GRADES

(L) SECTION A-A TO MATCH ADJOINING STREET CROSS SECTION

NOT TO SCALE

Concord NORTH CAROLINA High Performance Living

NON-RESIDENTIAL & MIXED USE CUL-DE-SAC ALL LENGTHS

3-2022

STR-113

SHEET 1 OF 1

NOTES:

1. SUBGRADE SHALL BE COMPACTED TO PUBLIC STREET STANDARDS.
2. STORM DRAINAGE (NOT SHOWN) SHALL BE PROVIDED AS NECESSARY.
3. ALLEYS SHALL BE CONSIDERED PRIVATE EASEMENTS AND WILL NOT BE ACCEPTED FOR MAINTENANCE BY THE CITY OF CONCORD.
4. DRIVEWAYS SHALL BE A MINIMUM OF 10' WIDE AND SEPARATED BY AT LEAST 6 FEET, OR GREATER IF REQUIRED BY PLANNING (LOT SIZE) REQUIREMENTS AND/OR N.C. BUILDING CODE.
5. DETAIL APPLIES TO SINGLE- OR DOUBLE-LOADED ALLEYS. FOR SINGLE-LOADED ALLEYS, THERE SHALL BE A 20-FOOT CLEAR ZONE FREE OF CUT SLOPES, OBSTRUCTIONS, HEDGES, ETC. FROM THE LOADED SIDE EDGE OF PAVEMENT.
6. MINIMUM 20' WIDE PAVEMENT REQUIRED IF ALLEY IS TO BE CONSIDERED A "FIRE APPARATUS ACCESS ROAD" PER NC FIRE CODE. FIRE CODE MAY REQUIRE OTHER DIMENSIONAL AND PAVEMENT SECTION CHANGES TO ACCOMMODATE MINIMUM REQUIREMENTS.

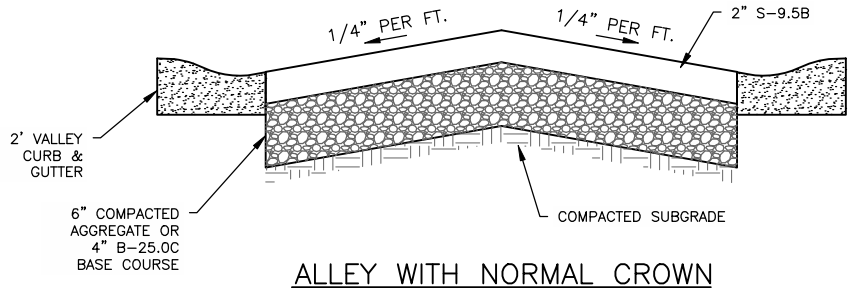

ALLEY WITH NORMAL CROWN

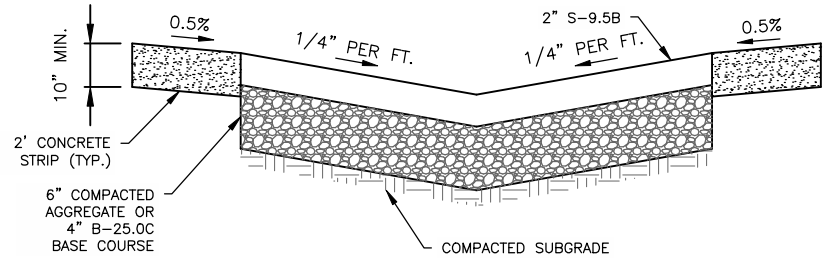

ALLEY WITH INVERSE CROWN

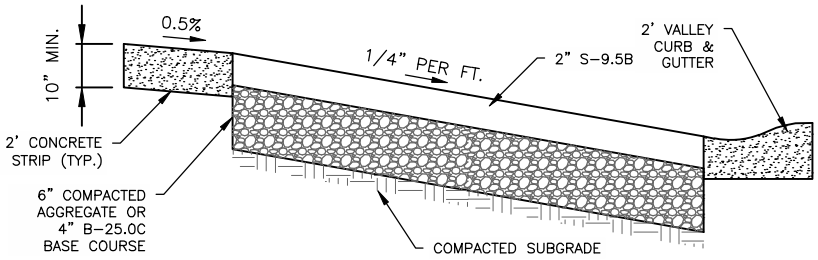

ALLEY WITH NO CROWN

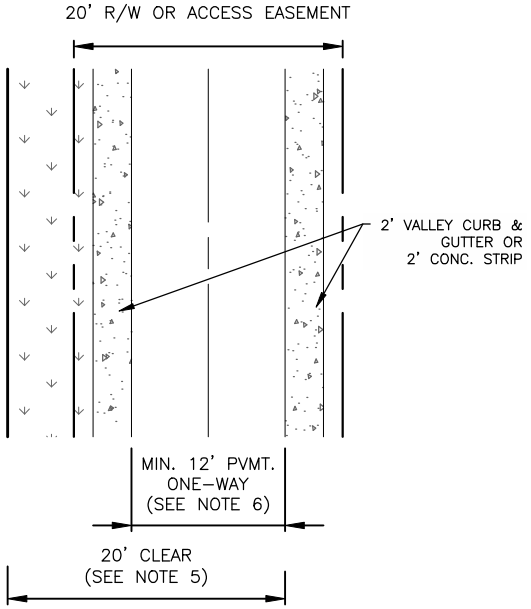

ONE-WAY PLAN

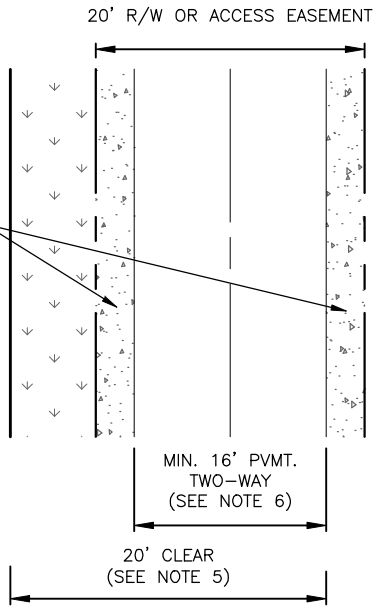

TWO-WAY PLAN

NOT TO SCALE

Concord NORTH CAROLINA High Performance Living

RESIDENTIAL ALLEYS

3-2022

STR-114

SHEET 1 OF 1

GENERAL NOTES:

1. STREETS A1 AND B1 REPRESENT THE HIGHER CLASSIFICATION WHILE STREETS A2 AND B2 REPRESENT THE LOWER CLASSIFICATION AFTER THE TRANSITION.
2. ALL TAPERS ARE 20:1 AND OCCUR ON BOTH SIDES OF THE ROAD TO BE TAPERED STARTING AT THE RADIUS RETURN AFTER THE INTERSECTION.
3. CENTERLINE OF BOTH STREETS ARE MAINTAINED. NO SHIFTING OF THE CENTERLINE SHALL OCCUR.
4. CURB TRANSITION TO OCCUR AT THE BACK OF CURB WHERE APPLICABLE.
5. RIGHT OF WAY AND SIDEWALK BEHIND TAPERED STREET SECTION TO TAPER OVER THE SAME LENGTH.
6. DETAIL APPLIES FOR TRANSITIONS FROM ONE CLASSIFICATION TO THE NEXT LOWEST. OTHER SITUATIONS WILL BE REVIEWED ON A CASE BY CASE BASIS.
7. NO DRIVEWAYS OR PARKING SPACES MAY BE LOCATED WITHIN THE TAPER.

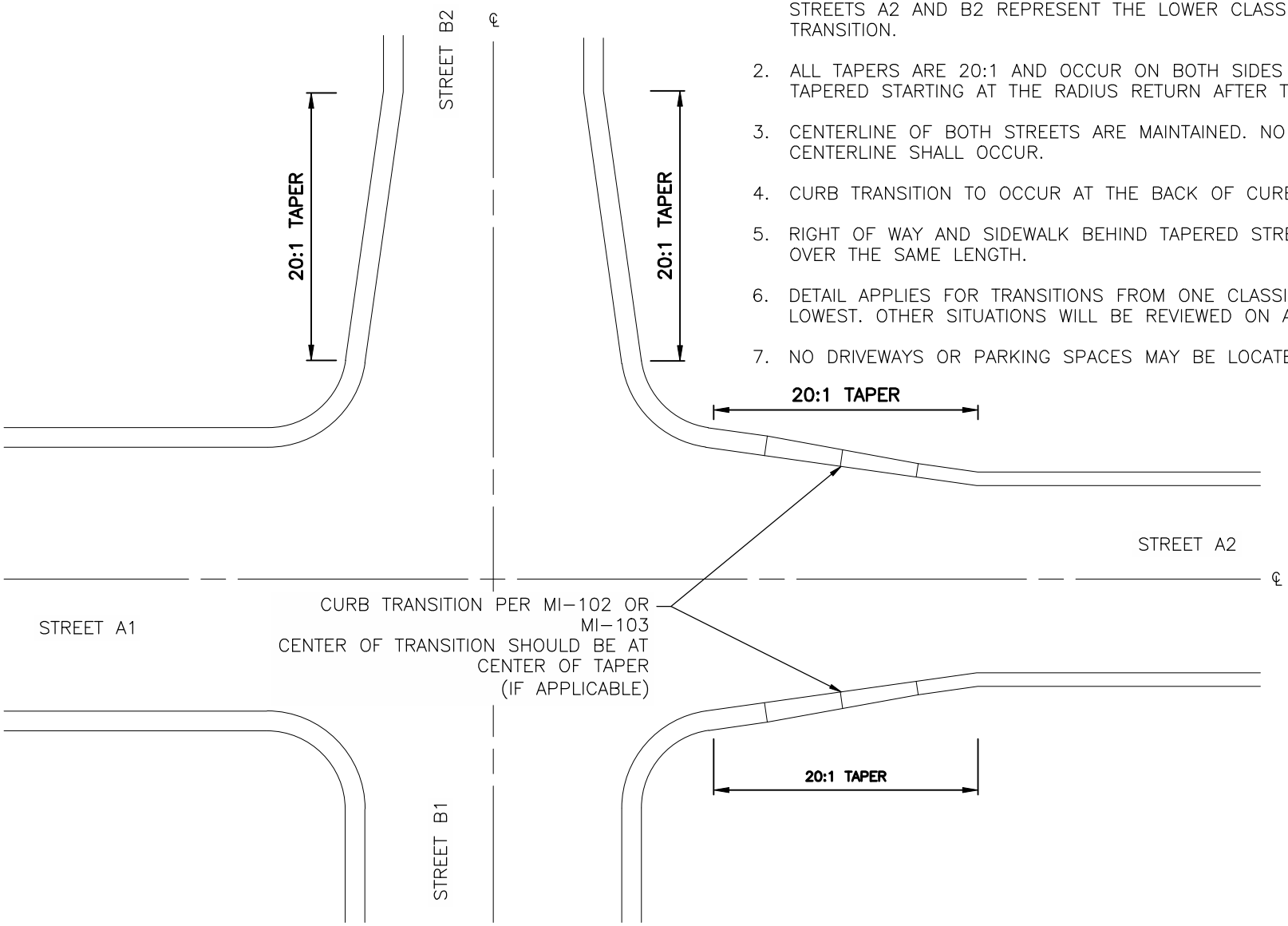

NOT TO SCALE

Concord NORTH CAROLINA High Performance Living

TRANSITION BETWEEN STREET CLASSIFICATIONS

3–2022

STR–116

SHEET 1 OF 1

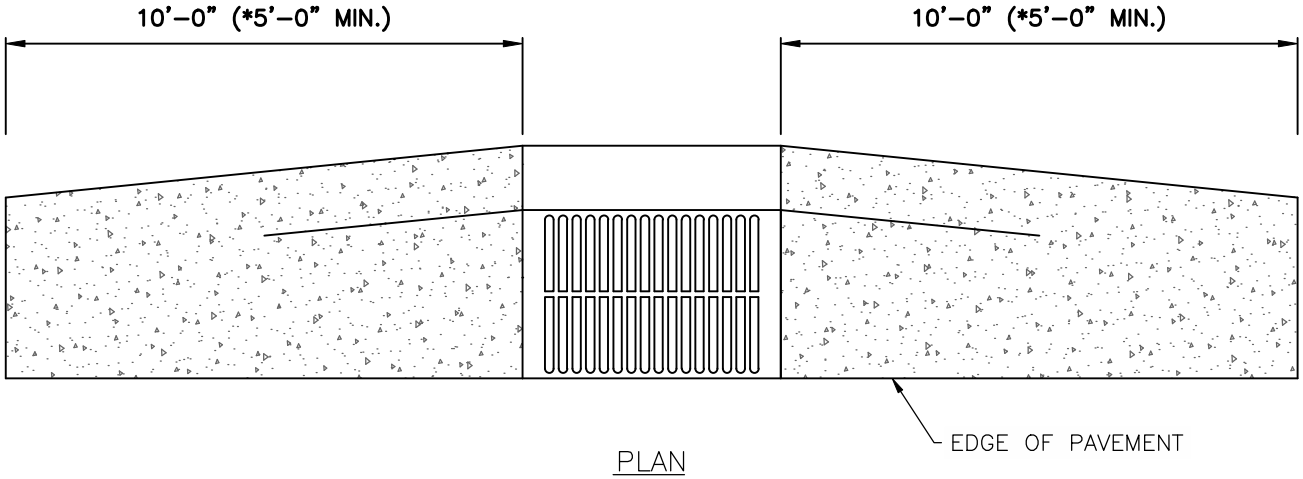

NOTE:
*5' TRANSITION APPROVED ON A CASE–BY–CASE BASIS.

SEE STANDARD MI–102 FOR CROSS SECTION GEOMETRY.

NOT TO SCALE

Concord NORTH CAROLINA High Performance Living

CATCH BASIN IN VALLEY CURB

3–2022

STR–118

SHEET 1 OF 1

(H) 2'–6" CURB AND GUTTER, STD. MI–101

(M) SAFETY RAIL, STD. MISC–206

(S) 4'–0" SIDEWALK, STD. MI–104 & MI–105

(H1) 2'–0" VALLEY GUTTER. STD. MI–101

(H2) CURB TRANSITION 2'–6" CURB AND GUTTER TO 2'–0" VALLEY GUTTER, STD. MI–102

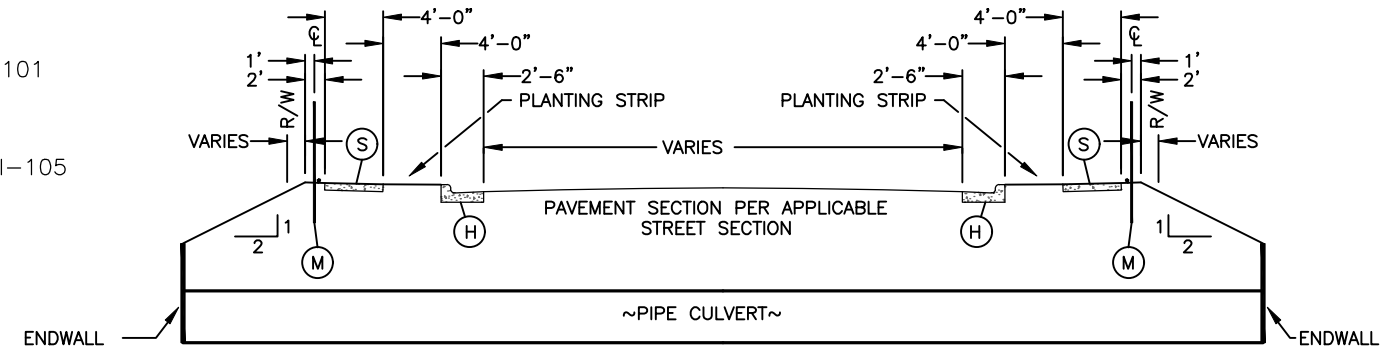

SECTION A – A

LH* = DISTANCE FROM END OF WINGWALL TO END OF SAFETY RAIL.

LC1 = DISTANCE FROM ℄ OF CULVERT TO END OF 2'–6" CURB AND GUTTER GUTTER.

LC2* = DISTANCE FROM END OF WINGWALL TO END OF 2'–6" CURB AND GUTTER.

*LH AND LC2 TO BE MEASURED FROM THE OUTSIDE OF THE NEAREST WALL OF THE CULVERT BARREL.

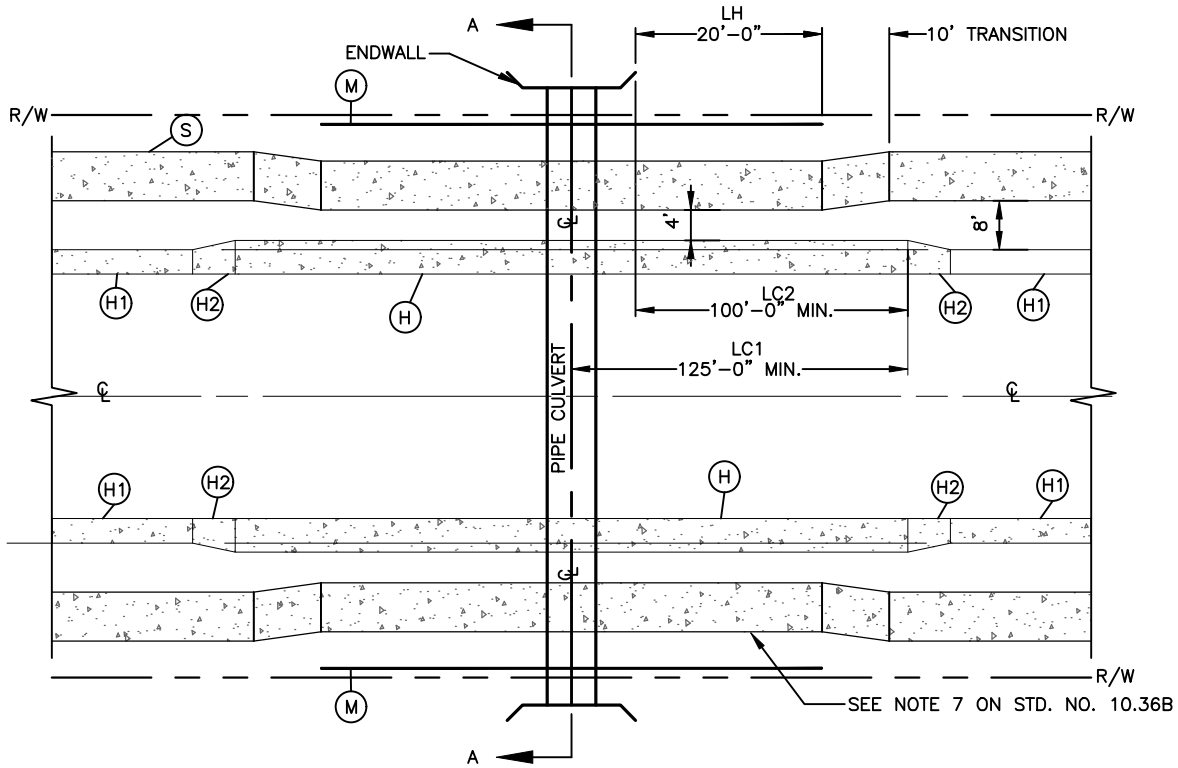

NOT TO SCALE

Concord NORTH CAROLINA High Performance Living

CULVERT CROSSING

3–2022

STR–119

SHEET 1 OF 1

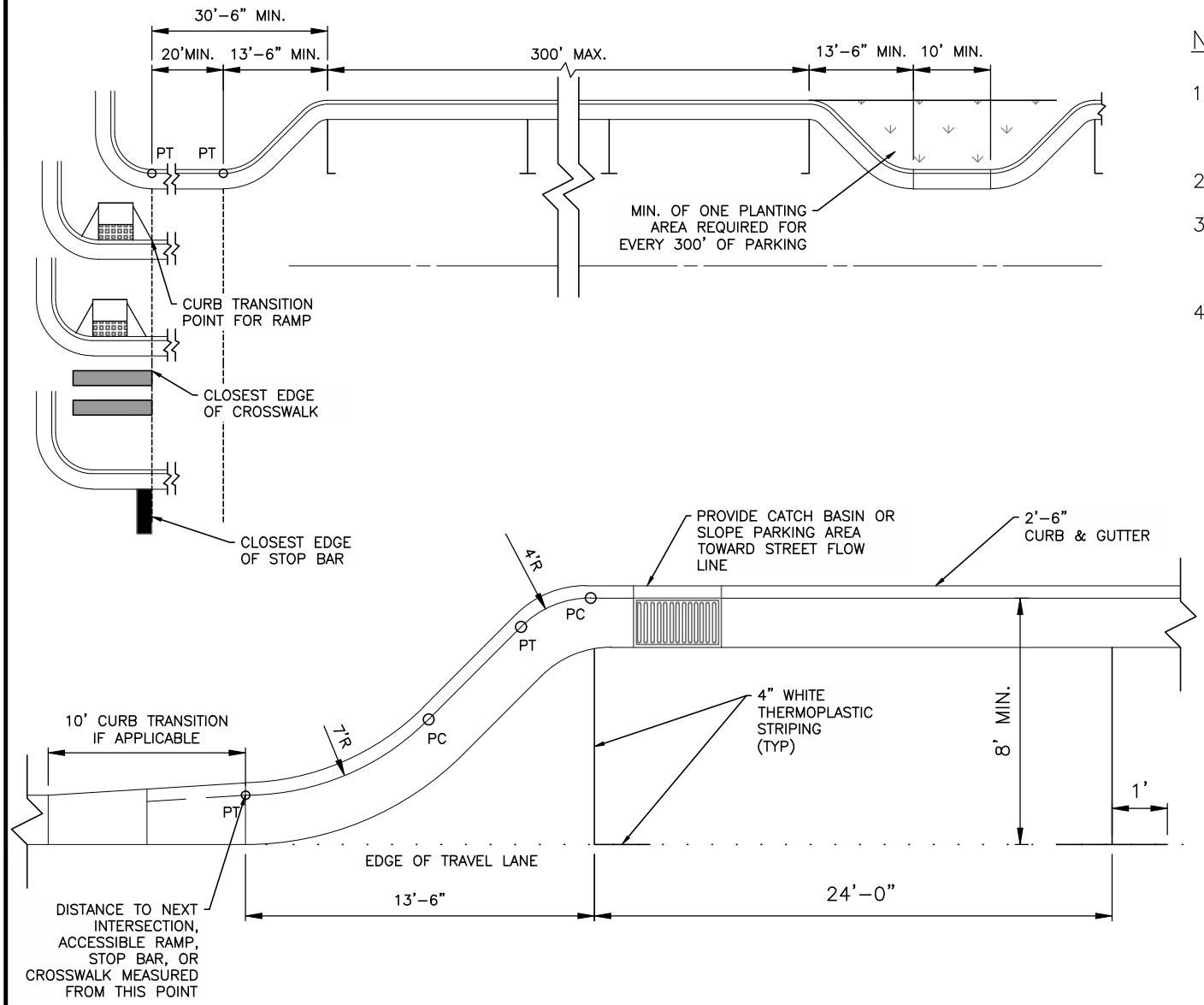

NOTES:

1. ACCESSIBLE SPACES AND ACCESS AISLES SHALL BE PROVIDED PER ADA GUIDELINES, AND PER STD. STR–121
2. ALL CONCRETE TO BE 3600 P.S.I.
3. PARKING SPACES SHALL BE GRADED TO PROPERLY DRAIN AND ENSURE WATER, SEDIMENT, DEBRIS ETC. DOES NOT COLLECT.
4. WHERE A BICYCLE LANE IS REQUIRED ADJACENT TO PARALLEL PARKING SPACES, THE MINIMUM WIDTH IS 6'.

NOT TO SCALE

Concord NORTH CAROLINA High Performance Living

ON–STREET PARALLEL PARKING

3–2022

STR–120

SHEET 1 OF 1

NOTES:

1. AN ACCESS AISLE SHALL BE PROVIDED AT STREET LEVEL FOR ON-STREET PARALLEL PARKING WITH 5' MIN. WIDTH AND SHALL EXTEND THE FULL LENGTH OF THE PARKING SPACE.
2. ACCESSIBLE SPACE AND ACCESS AISLE SHALL BE OBSTRUCTION-FREE.
3. ALL CONCRETE TO BE 3600 P.S.I.
4. GUTTER FLOW LINE SHALL BE MAINTAINED THROUGH THE ACCESS AISLE.
5. ACCESS AISLE, CURB RAMP, AND PARKING SPACE SHALL BE GRADED TO PROPERLY DRAIN AND TO ENSURE WATER, SEDIMENT, DEBRIS, ETC., DOES NOT COLLECT.
6. ACCESSIBLE PAVEMENT MARKING DETAIL PER MUTCD:
   - INSTALL INTERNATIONAL SYMBOL OF ACCESSIBILITY PARKING SPACE MARKINGS, INCLUDING WHITE SYMBOL WITH BLUE BACKGROUND AND WHITE BORDER. SYMBOL SHALL HAVE MIN. HEIGHT OF 28 INCHES AND MIN. WIDTH OF 24 INCHES (EXCLUSIVE OF BLUE BACKGROUND AND WHITE BORDER). STROKE WIDTH SHALL BE MIN. 3 INCHES.
   - WHITE PAVEMENT MARKINGS PLACED ON CONCRETE SHALL BE SHADOWED WITH BLACK BORDER.
   - TYPICAL SYMBOL LOCATION AND ORIENTATION PER "DIAGRAM A" BELOW
8. LOCATE IN MOST LEVEL AREA OF BLOCK (RECOMMENDED PRACTICE) TO MAXIMIZE USABILITY.
9. SPACE AND ACCESS AISLE SHOULD HAVE SMOOTH SURFACE FOR LIFT DEPLOYMENT. MINIMIZE CROSS SLOPE FOR LIFT OPERATION.
10. FOR MORE INFORMATION SEE SECTION R309 OF "PROPOSED GUIDELINES FOR PEDESTRIAN FACILITIES IN THE PUBLIC RIGHT-OF-WAY" (PROWAG).
11. USE APPROPRIATE SIGNAGE AS SHOWN ON STD. DRV-120 FOR ON-STREET PARKING.

ON-STREET PARKING SPACES REQUIRED	
TOTAL PARKING SPACES PROVIDED	MINIMUM NUMBER OF ACCESSIBLE SPACES REQUIRED
1 TO 25	1
26 TO 50	2
51 TO 75	3
76 TO 100	4
101 TO 150	5
151 TO 200	6
201 AND OVER	4% OF TOTAL
(BASED ON TABLE R214 OF PROWAG)	

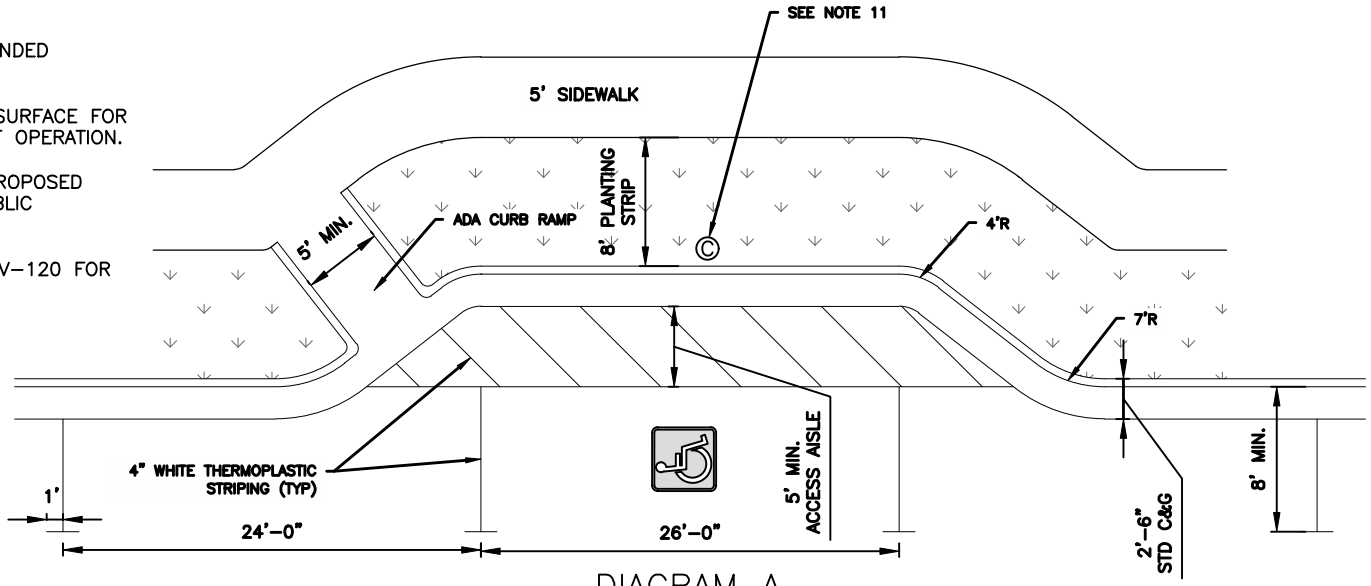

DIAGRAM A

NOT TO SCALE

Concord NORTH CAROLINA High Performance Living

ACCESSIBLE ON-STREET PARALLEL PARKING

3-2022

STR-121

SHEET 1 OF 1

NOTES:

1. ACCESSIBLE SPACES AND ACCESS AISLES SHALL BE PROVIDED PROVIDED PER ADA GUIDELINES. VAN ACCESSIBLE SPACES SHALL HAVE AN ACCESS AISLE WITH A MINIMUM WIDTH OF 8' LOCATED ON THE PASSENGER SIDE. NON-VAN ACCESS AISLES SHALL BE A MINIMUM OF 5' IN WIDTH.
2. ACCESSIBLE SPACE AND ACCESS AISLE SHALL BE OBSTRUCTION-FREE.
3. APPROPRIATE CURB RAMPS TO BE LOCATED AT EACH ACCESS AISLE.
4. ALL CONCRETE TO BE 3600 P.S.I.
5. ACCESSIBLE PAVEMENT MARKING DETAIL:
   - INSTALL INTERNATIONAL SYMBOL OF ACCESSIBILITY PARKING SPACE MARKINGS, INCLUDING WHITE SYMBOL WITH BLUE BACKGROUND AND WHITE BORDER. SYMBOL SHALL HAVE MIN. HEIGHT OF 28 INCHES AND MIN. WIDTH OF 24 INCHES (EXCLUSIVE OF BLUE BACKGROUND AND WHITE BORDER). STROKE WIDTH SHALL BE MIN. 3 INCHES.
   - WHITE PAVEMENT MARKINGS PLACED ON CONCRETE SHALL BE SHADOWED WITH BLACK BORDER.
   - TYPICAL SYMBOL LOCATION AND ORIENTATION PER "DIAGRAM A" BELOW
8. USE APPROPRIATE SIGNS AS SHOWN ON STD. DRV-120 FOR ACCESSIBLE ON-STREET PARKING.

PREFFERED DIMENSIONS FOR REVERSE ANGLE PARKING				
ANGLE (A)	STALL LENGTH (L)	STALL WIDTH (W)	STALL DEPTH (H)	PARALLEL WIDTH (C)
30°	32'	19	16'	9.5'
45°	25.46'	13.44'	18'	9.5'
60°	21.36	10.97	18.5'	9.5'

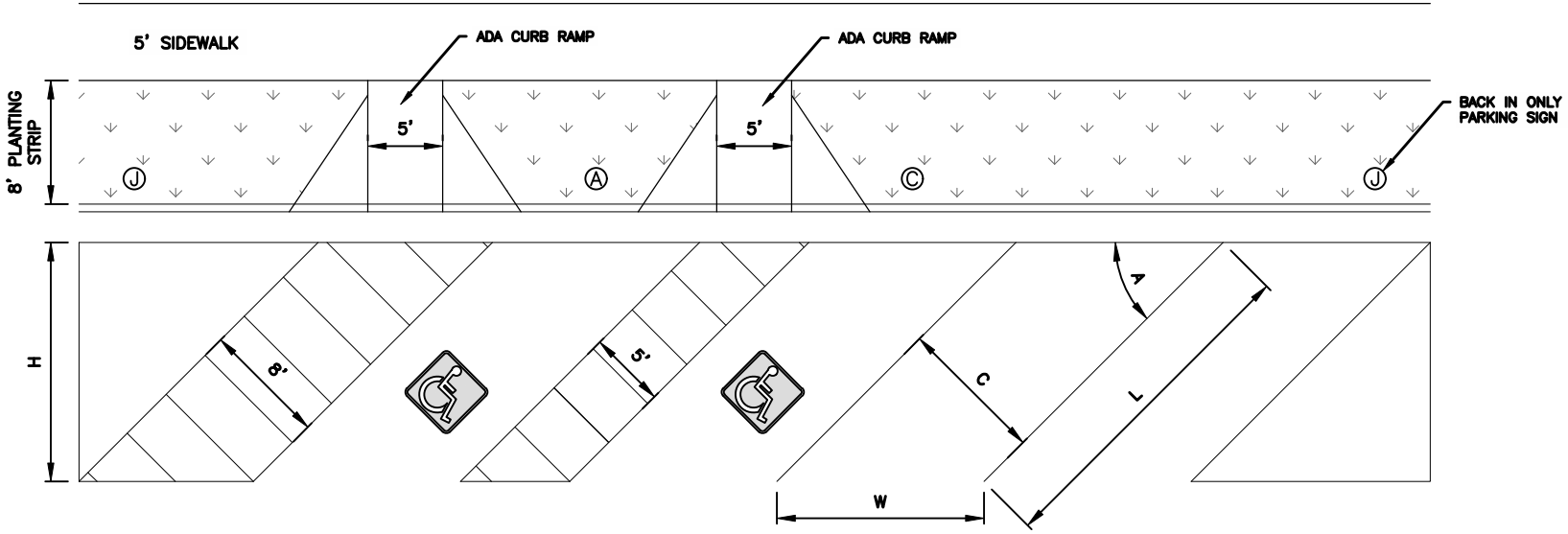

DIAGRAM A

NOT TO SCALE

Concord NORTH CAROLINA High Performance Living

ON-STREET REVERSE ANGLE PARKING

3-2022

STR-122

SHEET 1 OF 1

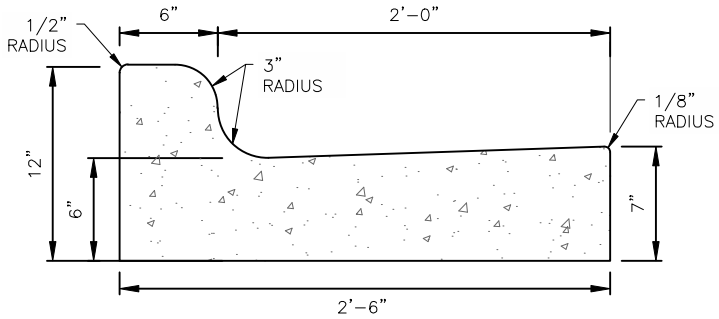

STANDARD 2'-6" CURB & GUTTER

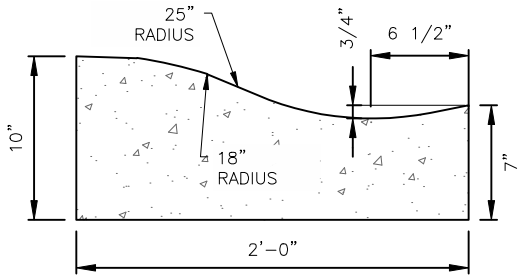

2'-0" VALLEY CURB & GUTTER

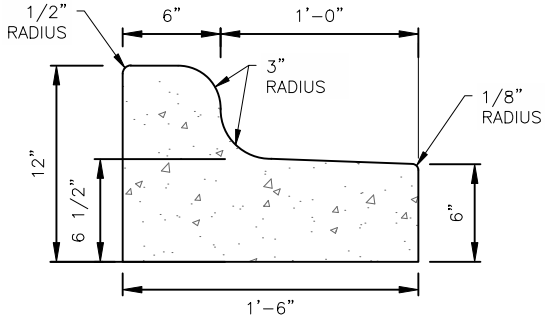

1'-6" MEDIAN CURB & GUTTER

TO BE USED IN MEDIANS WHEN LANES ARE SLOPED FROM ISLAND OR AS SPECIFIED BY THE APPROPRIATE CITY ENGINEERING DEPT.

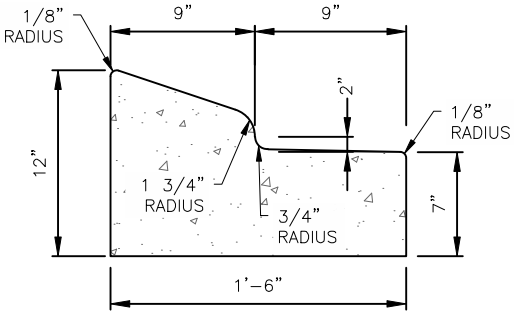

1'-6" MOUNTABLE CURB & GUTTER

TO BE USED IN MEDIANS ONLY: WHEN SPECIFIED BY THE APPROPRIATE CITY DEPT.

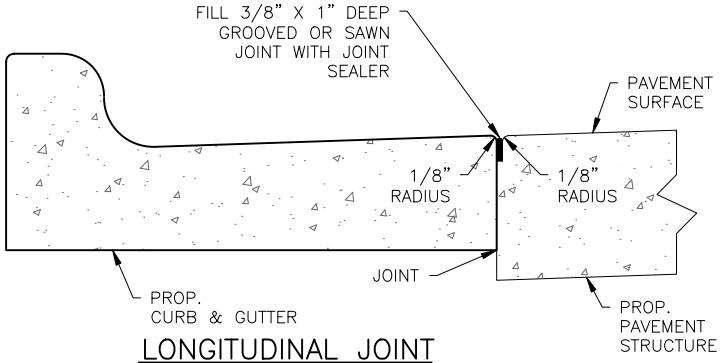

LONGITUDINAL JOINT

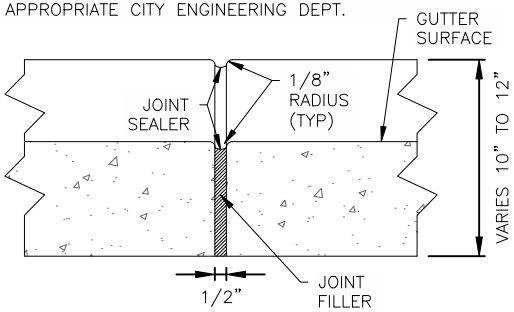

TRANSVERSE EXPANSION JOINT

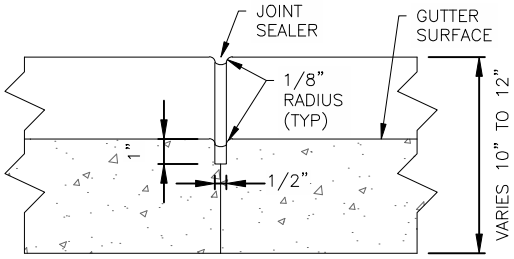

CONTRACTION JOINT

NOTES

1. NCDOT STANDARD DETAIL 846.01 TO BE USED FOR VARIOUS CURB AND GUTTER SUPERELEVATION RATES.
2. PLACE CONTRACTION JOINTS AT 10' INTERVALS. JOINT SPACING MAY BE ALTERED BY CITY ENGINEER TO PREVENT UNCONTROLLED CRACKING.
3. FILL ALL CONSTRUCTION JOINTS WITH JOINT FILLER AND SEALER.
4. SPACE EXPANSION JOINTS AT 90' INTERVALS AND ADJACENT TO ALL RIGID OBJECTS. JOINTS SHALL MATCH LOCATION WITH JOINTS IN ABUTTING SIDEWALK.
5. CONCRETE COMPRESSIVE STRENGTH SHALL BE 3600 P.S.I. IN 28 DAYS.
6. TOP 6" OF SUBGRADE BENEATH CURB AND GUTTER SHALL BE COMPACTED TO 100% STANDARD PROCTOR DENSITY.

NOT TO SCALE

Concord NORTH CAROLINA High Performance Living

CONCRETE CURB & GUTTER DETAILS

3-2022

MI-101

SHEET 1 OF 1

L = 10 FEET IN LONGITUDINAL SECTION

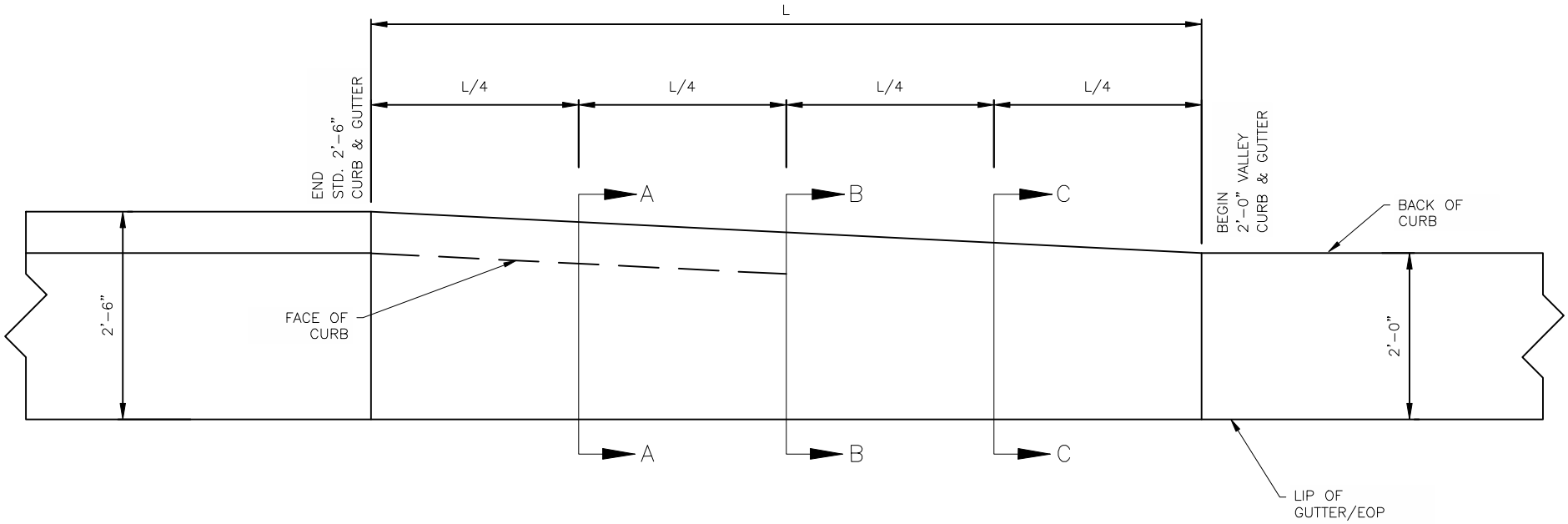

PLAN VIEW

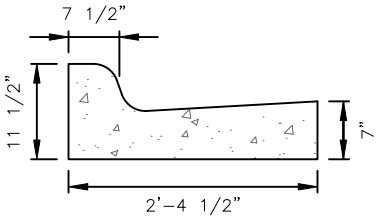

SECTION A–A

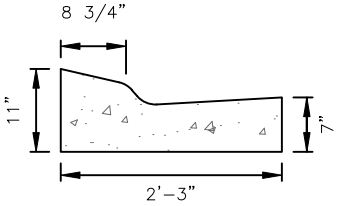

SECTION B–B

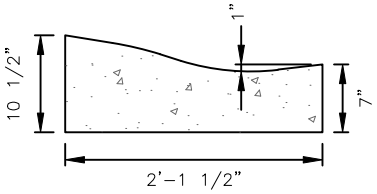

SECTION C–C

NOTES

1. TRANSITION SHALL NOT BE LOCATED WITHIN THE CURB RADIUS.
2. TRASNITION TO BE ALONG BACK OF CURB.

NOT TO SCALE

Concord
NORTH CAROLINA
High Performance Living

CURB TRANSITION
2'–6" STANDARD TO 2'–0" VALLEY

3–2022

MI–102

SHEET 1 OF 1

L = 10 FEET IN LONGITUDINAL SECTION

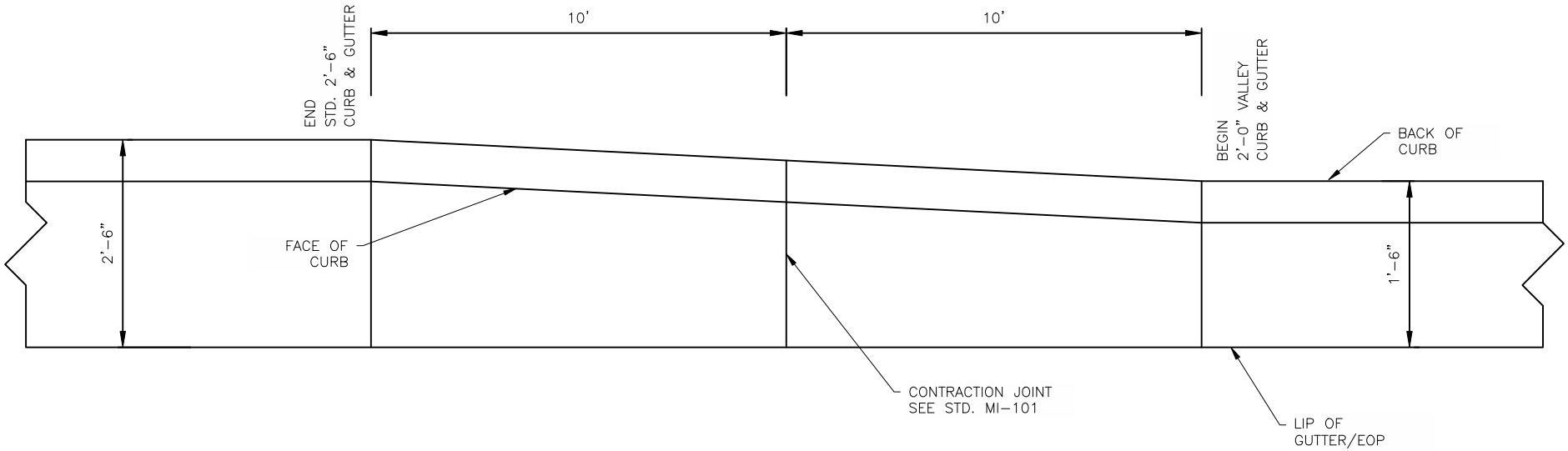

PLAN VIEW

NOTES

1. TRANSITION SHALL NOT BE LOCATED WITHIN THE CURB RADIUS.
2. TRASNITION TO BE ALONG BACK OF CURB.

NOT TO SCALE

Concord
NORTH CAROLINA
High Performance Living

CURB TRANSITION
2'-6" STANDARD TO 1'-6" STANDARD

3-2022

MI-103

SHEET 1 OF 1

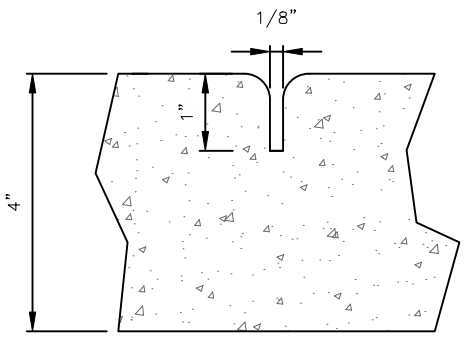

GROOVE JOINT IN SIDEWALK

GENERAL NOTES:

1. A GROOVE JOINT 1" DEEP WITH 1/8" RADII SHALL BE REQUIRED IN THE CONCRETE SIDEWALK AT 5' INTERVALS. ONE 1/2" EXPANSION JOINT WILL BE REQUIRED AT INTERVALS OF NOT MORE THAN 45' AND MATCHING EXPANSION/CONSTRUCTION JOINT IN ADJACENT CURB. A SEALED 1/2" EXPANSION JOINT WILL BE REQUIRED WHERE THE SIDEWALK JOINS ANY RIGID STRUCTURE.
2. SIDEWALK AT DRIVEWAY CORSSINGS TO BE 6" THICK.
3. MINIMUM WIDTH OF SIDEWALK IS 5'
4. CONCRETE COMPRESSIVE STRENGTH SHALL BE 3600 PSI. IN 28 DAYS.
5. ZONING CONDITIONS MAY REQUIRE ADDITIONAL WIDTH SIDEWALKS WHICH SHALL SUPERSEDE THESE STANDARD DIMENSIONS SHOWN.
6. LIDS FOR JUNCTION BOXES AND UTILITY VAULTS SHALL BE NON-SKID AS SPECIFIED BY ENGINEER.
7. JOINT MATERIALS SHALL LIMIT SHRINK/SWELL SO POST CONSTRUCTION INSTALLATION RESULTS IN A MAXIMUM OF 1/4" FROM FLUSH.

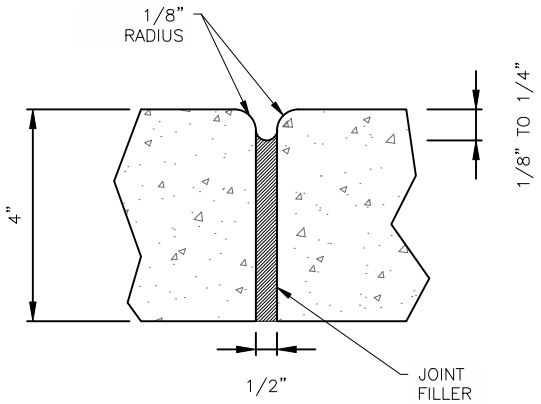

TRANSVERSE EXPANSION JOINT IN SIDEWALK

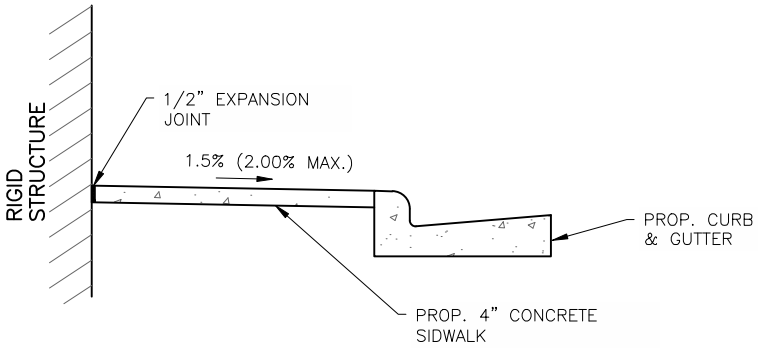

DETAILS SHOWING EXPANSION JOINTS IN CONCRETE SIDEWALK

NOT TO SCALE

Concord
NORTH CAROLINA
High Performance Living

CONCRETE SIDEWALKS

3-2022

MI-104

SHEET 1 OF 1

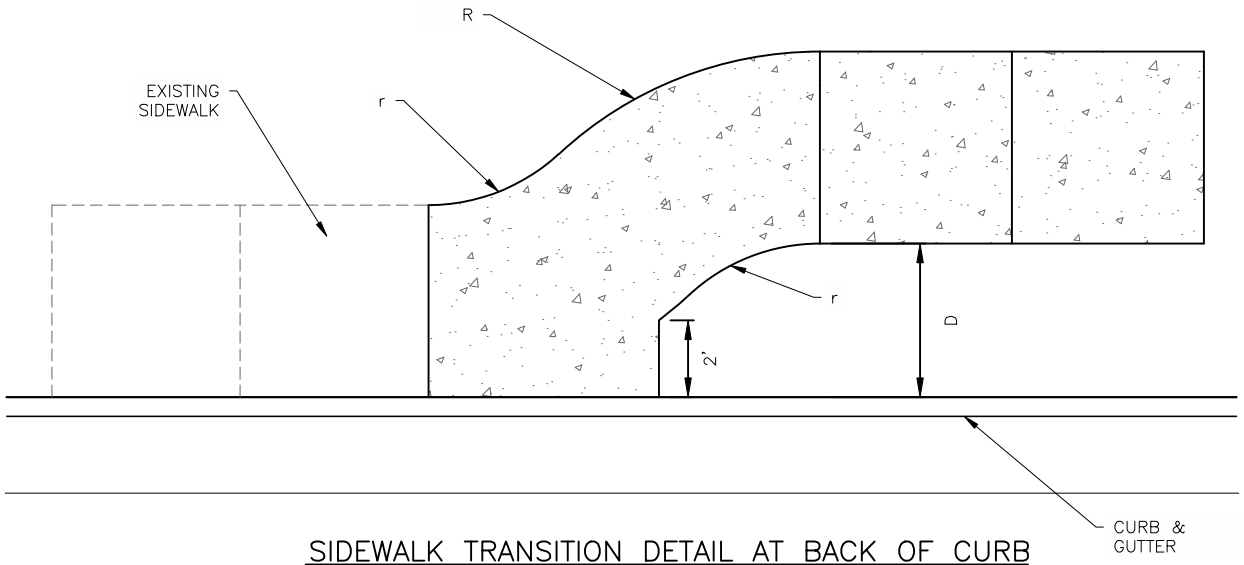

SIDEWALK TRANSITION DETAIL AT BACK OF CURB

KEY		
D	R	r
0'-2.9'	10'-0"	4'-0"
3'-7.9'	25'-0"	19'-0"
8'+	50'-0"	44'-0"

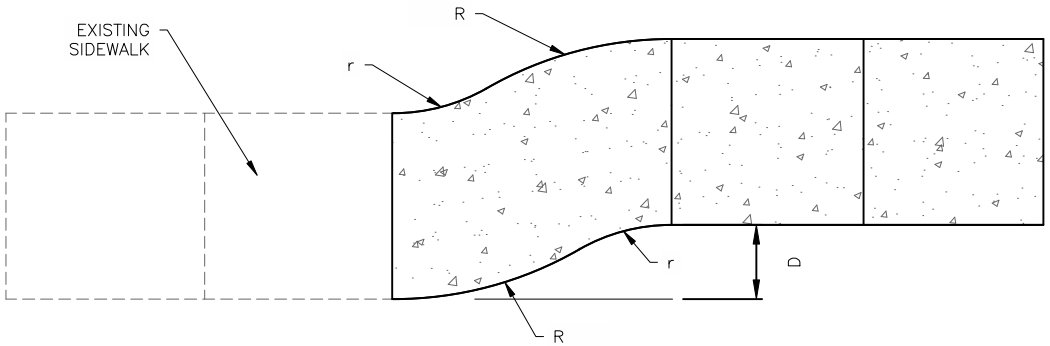

SIDEWALK TRANSITION DETAIL (PLANTING STRIP BOTH SIDES)

NOT TO SCALE

Concord NORTH CAROLINA High Performance Living

SIDEWALK TRANSITION

3-2022

MI-105

SHEET 1 OF 1

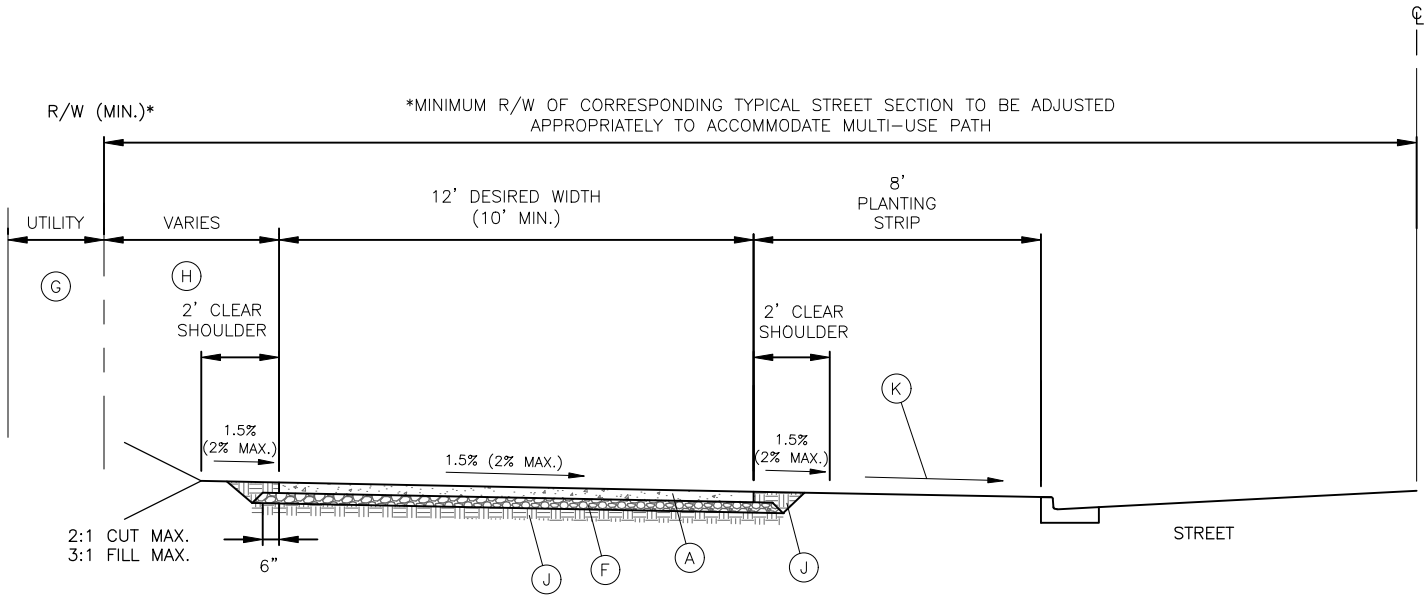

NOTES:

1. AT INTERSECTIONS WITH STREETS OR DRIVEWAYS, RAMP WIDTH MUST MATCH MULTI-USE PATH WIDTH.
2. ALL JOINTS MUST BE SEALED. SEAL MUST BE NON-SHRINKING AND FLUSH WITH FINISHED GRADE OF THE CONCRETE PATH.
3. ALL CONCRETE SHALL BE AT LEAST 3600 PSI COMPRESSIVE STRENGTH.
4. JOINTS MUST BE SAWCUT A MINIMUM OF 1/4 DEPTH OF CONCRETE DEPTH, BUT NO MORE THAN 1/2 OF CONCRETE DEPTH.
   - TRANSVERSE JOINTS MUST BE SAWCUT EVERY 6 FEET.
   - CONSTRUCTION JOINTS MUST BE EVERY 40 FEET.
5. NO ABOVE GROUND UTILITIES OR UTILITY SURFACE COVERS/PLATES/MANHOLES SHALL BE LOCATED WITHIN MULTI-USE-PATH AND SHALL BE A MINIMUM OF 2 FEET FROM THE EDGE OF THE PATH. RAISED MANHOLES SHALL BE LOCATED A MINIMUM OF 4' FROM EDGE OF PATH.
6. SIGN POSTS OR OTHER FIXED OBJECTS SHALL BE LOCATED A MINIMUM OF 2' FROM EDGE OF PATH.

KEY

- (A) 6" CONCRETE, 3600 PSI
- (F) 3" COMPACTED AGGREGATE BASE COURSE
- (G) ADDITIONAL UTILITY R/W OR EASEMENT TO BE DETERMINED BY APPLICABLE PARTIES
- (H) WIDTH TO BE DETERMINED BY TYPICAL SECTION OF STREET CLASSIFICATION
- (J) SUBGRADE COMPACTED TO A DENSITY NO LESS THAN 95%
- (K) PLANTING STRIP ADJACENT TO MULTI-USE PATH SHALL BE GRADED TO 1/4" PER FOOT (MIN.) TO 1-1/4" PER FOOT (MAX.). PRIOR APPROVAL REQUIRED FOR STEEPER GRADES.

NOT TO SCALE

Concord NORTH CAROLINA High Performance Living

CONCRETE MULTI-USE PATH

3-2022

MI-106

SHEET 1 OF 1

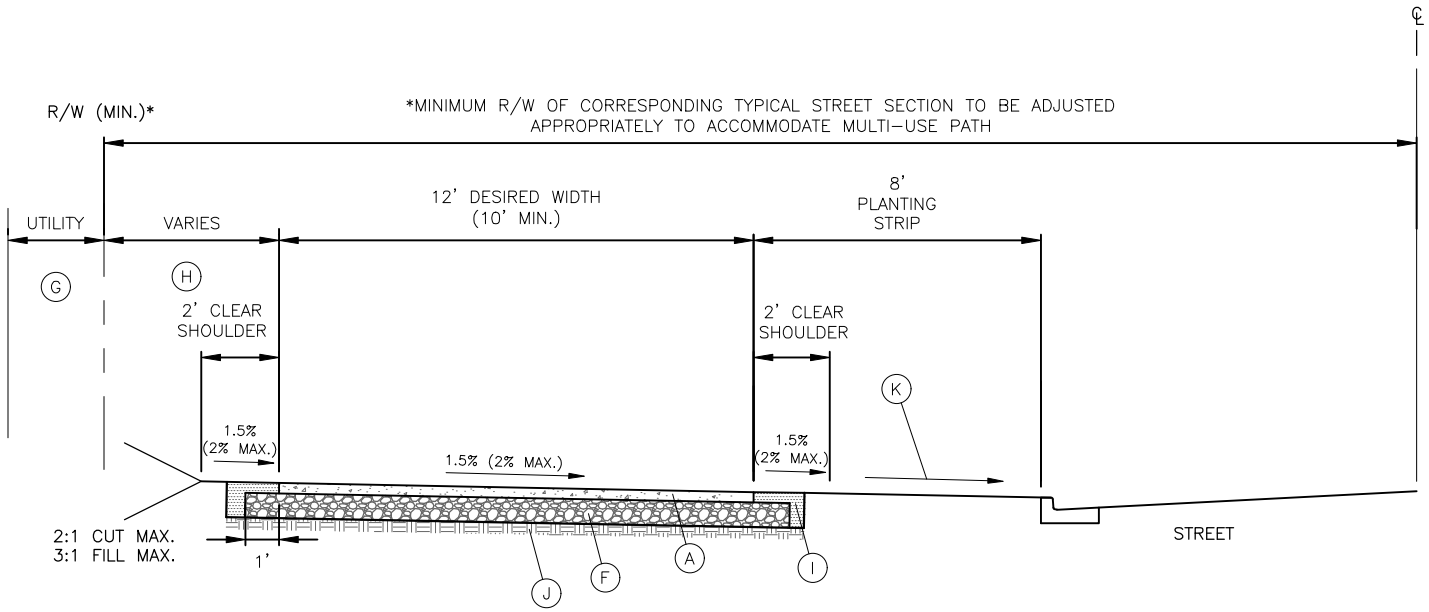

NOTES:

1. AT INTERSECTIONS WITH STREETS OR DRIVEWAYS, RAMP WIDTH MUST MATCH MULTI-USE PATH WIDTH.
2. NO ABOVE GROUND UTILITIES OR UTILITY SURFACE COVERS/PLATES/MANHOLES SHALL BE LOCATED WITHIN MULTI-USE-PATH AND SHALL BE A MINIMUM OF 2 FEET FROM THE EDGE OF THE PATH. RAISED MANHOLES SHALL BE LOCATED A MINIMUM OF 4' FROM EDGE OF PATH.
3. SIGN POSTS OR OTHER FIXED OBJECTS SHALL BE LOCATED A MINIMUM OF 2' FROM EDGE OF PATH.

GEOTEXTILE FABRIC SPECIFICATIONS		
	TYPICAL	TEST
TENSILE STRENGTH	200	ASTM D4632-86
ELONGATION AT Break, %	15	ASTM D4632
PUNCTURE STENGTH, LBS.	100	ASTM D0751
MULLEN BURST, PSI	400	ASTM D0751/3786
TRAPEZOID TEAR, LBS.	75	ASTM D4533

KEY

- (A) 2" ASPHALT CONCRETE S9.5B
- (F) 6" COMPACTED AGGREGATE BASE COURSE UNDERLINED WITH GEOTEXTILE FABRIC (SEE TABLE)
- (G) ADDITIONAL UTILITY R/W OR EASEMENT TO BE DETERMINED BY APPLICABLE PARTIES
- (H) WIDTH TO BE DETERMINED BY TYPICAL SECTION OF STREET CLASSIFICATION
- (I) CLEAN BACKFILL
- (J) SUBGRADE COMPACTED TO A DENSITY OF 100%
- (K) PLANTING STRIP ADJACENT TO MULTI-USE PATH SHALL BE GRADED TO 1/4" PER FOOT (MIN.) TO 1-1/4" PER FOOT (MAX.). PRIOR APPROVAL REQUIRED FOR STEEPER GRADES.

NOT TO SCALE

Concord NORTH CAROLINA High Performance Living

ASPHALT MULTI-USE PATH

3-2022

MI-107

SHEET 1 OF 1

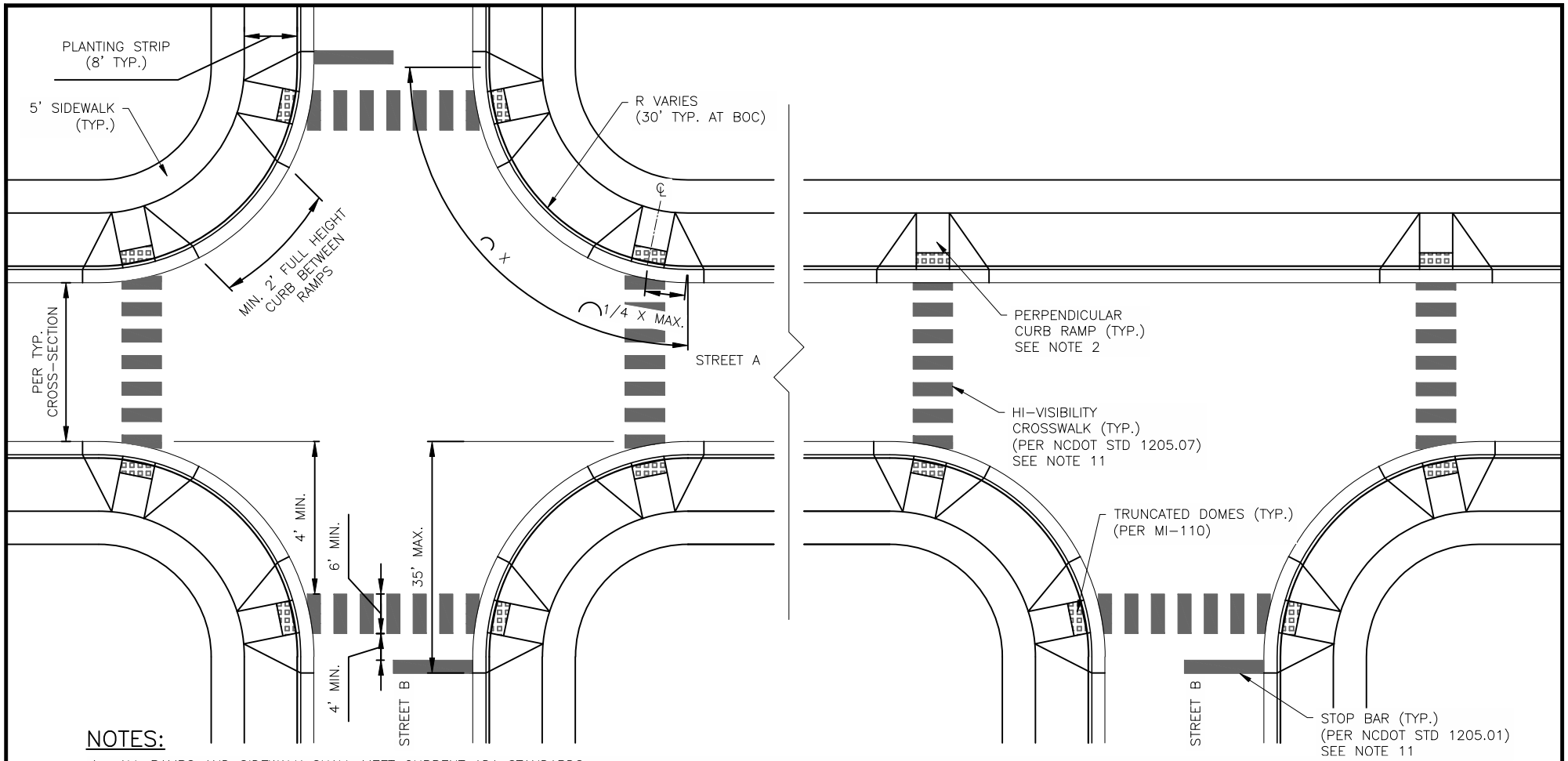

NOTES:

1. ALL RAMPS AND SIDEWALK SHALL MEET CURRENT ADA STANDARDS.
2. PERPENDICULAR CURB RAMPS PER DETAILS MI-111 AND MI-112 ARE STANDARD, OTHER TYPES WILL BE CONSIDERED ON A CASE BY CASE BASIS.
3. DUAL RAMPS AT EACH CORNER ARE STANDARD. SINGLE DIAGONAL RAMPS MAY BE CONSIDERED ONLY IN UNUSUAL CIRCUMSTANCES OR RETROFIT SITUATIONS AND MUST MEET ADA STANDARDS.
4. CURB RAMP AND CROSSWALK LOCATIONS AND TYPES AT INTERSECTIONS WITH NCDOT STREETS ARE SUBJECT TO REVIEW AND APPROVAL BY NCDOT.
5. FOR ALL RAMPS AT MARKED CROSSWALKS, THE RAMP OPENING (AT THE FULLY DEPRESSED CURB) SHALL BE LOCATED WITHIN THE PARALLEL BOUNDARIES OF CROSSWALK MARKINGS.
6. DRAINAGE STRUCTURES, MAST ARMS, LIGHT POLES AND OTHER OBSTRUCTIONS SHALL NOT BE PLACED IN LINE WITH RAMPS. LOCATION OF THE RAMP SHALL TAKE PRECEDENCE OVER LOCATION OF OBSTRUCTIONS EXCEPT WHERE EXISTING OBSTRUCTIONS ARE BEING UTILIZED IN THE NEW CONSTRUCTION.
7. NO UTILITY STRUCTURES MAY BE LOCATED WITHIN THE RAMP AREA.
8. NO PORTION OF A CURB RAMP MAY BE CONTAINED WITHIN A DRIVEWAY, NOR MAY A DRIVEWAY SERVE AS A CURB RAMP.
9. CATCH BASINS MUST BE PLACED APPROPRIATELY WITHOUT INTERFERING WITH THE CURB TRANSITIONS FOR RAMPS.
10. WING AND RAMP SURFACES SHALL BE FINISHED IN ACCORDANCE WITH THE LATEST EDITION OF NCDOT STANDARD SPECIFICATIONS FOR ROADS AND STRUCTURES.
11. CROSSWALKS AND STOP BARS SHALL BE WHITE THERMOPLASTIC 120 MILS THICK. LOCATIONS WILL BE DETERMINED ON A CASE BY CASE BASIS DURING THE PLAN REVIEW PROCESS.
12. TERMINATE PARKING A MINIMUM OF 20' FROM A PEDESTRIAN CROSSING.

NOT TO SCALE

Concord
NORTH CAROLINA
High Performance Living

TYPICAL INTERSECTION CURB RAMP LAYOUT AND NOTES

3-2022

MI-109

SHEET 1 OF 1

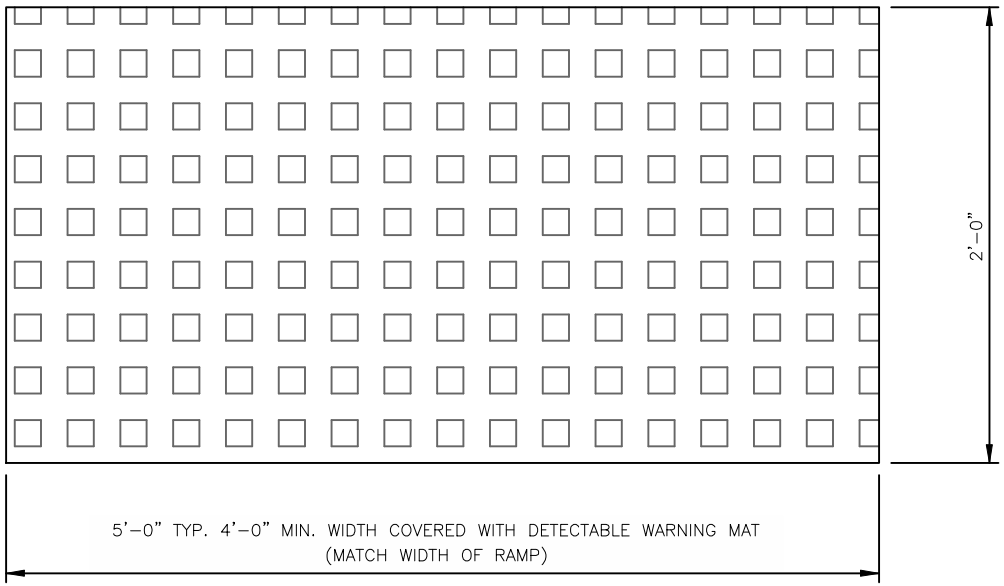

TRUNCATED DOME PLAN VIEW

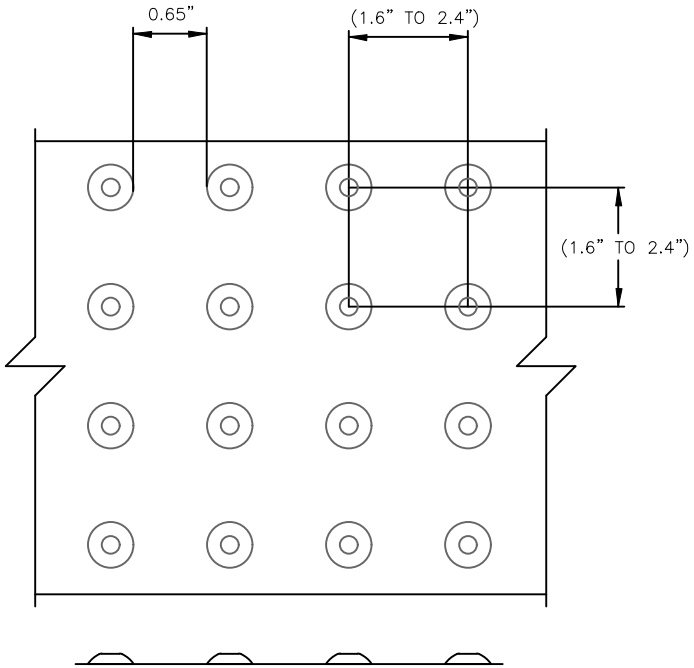

TRUNCATED DOME SPACING

NOTES:

1. ALL DETECTABLE WARNING DEVICES USED IN NEW CONSTRUCTION SHALL BE OF A RIGID PRECAST OR EMBEDDED PRODUCT APPROVED BY THE CITY ENGINEER. RETROFIT MATS WILL ONLY BE ALLOWED ON EXISTING RAMPS WITH PRIOR APPROVAL OF THE CITY ENGINEER FOR MATERIAL TYPE AND INSTALLATION (IE. RESURFACING).
2. RAMP AND DETECTABLE WARNING AREA SHALL BE A MINIMUM OF 4 FEET IN WIDTH, BUT NOT LESS THAN THE WIDTH OF SIDEWALK LEADING TO BACK OF RAMP.
3. DETECTABLE WARNING SURFACES SHALL EXTEND 2.0 FT MINIMUM IN THE DIRECTION OF PEDESTRIAN TRAVEL.
4. DETECTABLE WARNING AREA CAN BE PLACED SQUARE WHERE USED IN A CURB RADIUS.
5. THE ROWS OF TRUNCATED DOMES IN DETECTABLE WARNING SURFACES SHOULD BE ALIGNED PERPENDICULAR TO THE GRADE BREAK BETWEEN THE RAMP RUN AND THE STREET. WHERE DETECTABLE WARNING SURFACES ARE PROVIDED ON A SURFACE WITH A SLOPE THAT IS LESS THAN 5 PERCENT, DOME ORIENTATION IS LESS CRITICAL.
6. DECTECTABLE WARNING AREA SHALL CONTRAST VISUALLY WITH ADJACENT GUTTER, STREET OR HIGHWAY, OR PEDESTRIAN ACCESS ROUTE SURFACE; RED COLOR SHALL BE USED.
7. MATS ARE TO BE RIGID WITH TURNED-DOWN EDGES EMBEDDED IN CONCRETE TO ELIMINATE TRIP HAZARD.
8. DIMENSIONS PER NCDOT 848.06

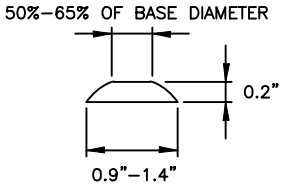

TRUNCATED DOME SECTION

NOT TO SCALE

Concord NORTH CAROLINA High Performance Living

TRUNCATED DOMES

3-2022

MI-110

SHEET 1 OF 1

NOTES:

1. ALL CONCRETE SHALL BE A MINIMUM OF 3600 PSI.
2. ENSURE FLUSH CONDITIONS AT CURB RAMP TO GUTTER TRANSITION.
3. TYPICALLY, THE SIDEWALK RUNNING SLOPE SHALL NOT EXCEED THE GENERAL GRADE ESTABLISHED FOR THE ADJACENT STREET.
4. MAINTAIN POSITIVE DRAINAGE ALONG THE LIP OF GUTTER IN RAMP. IN FLAT AREAS, ADDITIONAL CATCH BASINS MAY BE REQUIRED ON THE SIDES OF THE RAMP TO MINIMIZE STANDING WATER AT THE RAMP LOCATION.
5. IF THE SLOPE FROM FLOWLINE TO BACK OF CURB AT RAMP IS LESS THAN 8.33%, THEN THE SLOPE FROM LIP TO FLOWLINE AT RAMP MAY EXCEED 5% AS LONG AS THE ALGEBRAIC DIFFERENCE BETWEEN THESE TWO SLOPES IS LESS THAN 13.33%.
6. CURB RAMPS WITH RETURNED CURBS MAY BE USED ONLY WHERE PEDESTRIANS WOULD NOT TYPICALLY WALK ACROSS THE RAMP, THE ADJACENT SURFACE IS PLANTING OR OTHER NON-WALKING SURFACE, OR THE SIDE APPROACH IS SUBSTANTIALLY OBSTRUCTED.

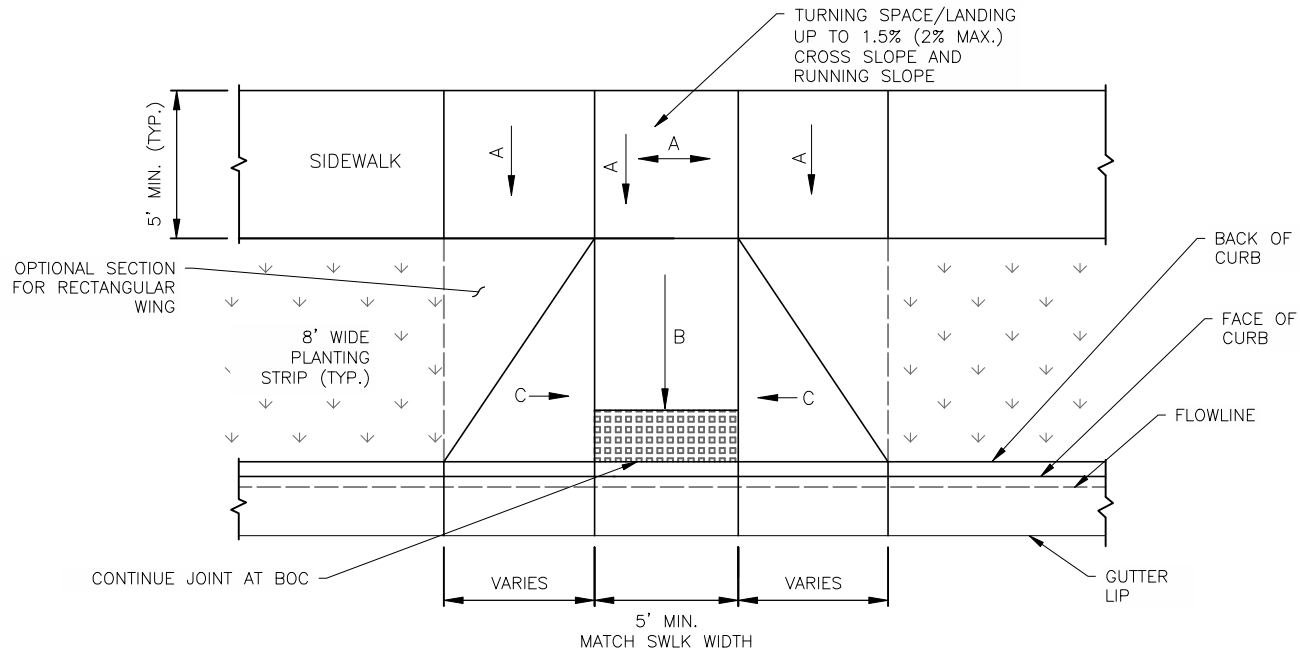

PLAN VIEW

SLOPE "A" = UP TO 1.5% (2.00% MAX)
SLOPE "B" = UP TO 7.5% (8.33% MAX)
SLOPE "C" = UP TO 10% MAX

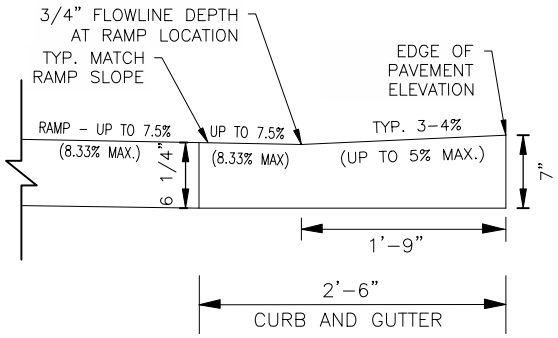

2'-6" CURB AND GUTTER RAMP DETAIL

MAXIMUM SLOPES FOR CURB AND GUTTER DEPRESSION AT RAMPS

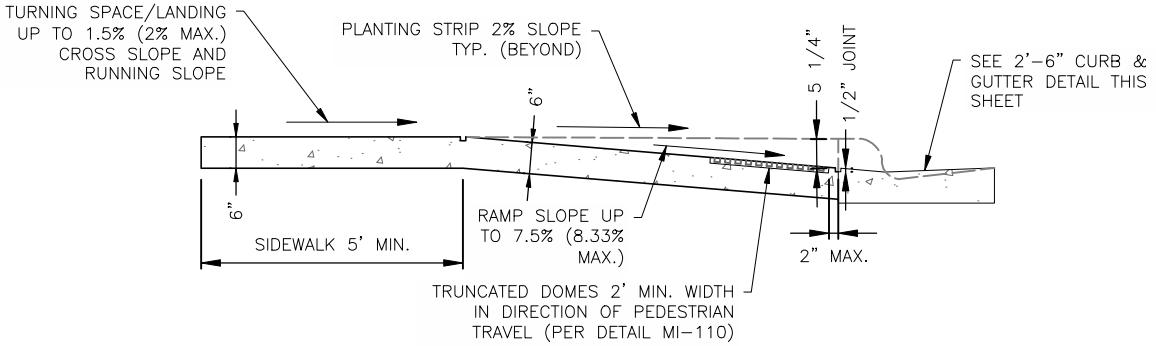

TYPICAL RAMP SECTION AT CENTERLINE

NOT TO SCALE

Concord NORTH CAROLINA High Performance Living

PERPENDICULAR CURB RAMP
2'-6" CURB & GUTTER

3-2022

MI-111

SHEET 1 OF 1

NOTES:

1. ALL CONCRETE SHALL BE A MINIMUM OF 3600 PSI.
2. ENSURE FLUSH CONDITIONS AT CURB RAMP TO GUTTER TRANSITION.
3. TYPICALLY, THE SIDEWALK RUNNING SLOPE SHALL NOT EXCEED THE GENERAL GRADE ESTABLISHED FOR THE ADJACENT STREET.
4. MAINTAIN POSITIVE DRAINAGE ALONG THE LIP OF GUTTER IN RAMP. IN FLAT AREAS, ADDITIONAL CATCH BASINS MAY BE REQUIRED ON THE SIDES OF THE RAMP TO MINIMIZE STANDING WATER AT THE RAMP LOCATION.
5. IF THE SLOPE FROM FLOWLINE TO BACK OF CURB AT RAMP IS LESS THAN 8.33%, THEN THE SLOPE FROM LIP TO FLOWLINE AT RAMP MAY EXCEED 5% AS LONG AS THE ALGEBRAIC DIFFERENCE BETWEEN THESE TWO SLOPES IS LESS THAN 13.33%.
6. CURB RAMPS WITH RETURNED CURBS MAY BE USED ONLY WHERE PEDESTRIANS WOULD NOT TYPICALLY WALK ACROSS THE RAMP, THE ADJACENT SURFACE IS PLANTING OR OTHER NON-WALKING SURFACE, OR THE SIDE APPROACH IS SUBSTANTIALLY OBSTRUCTED.

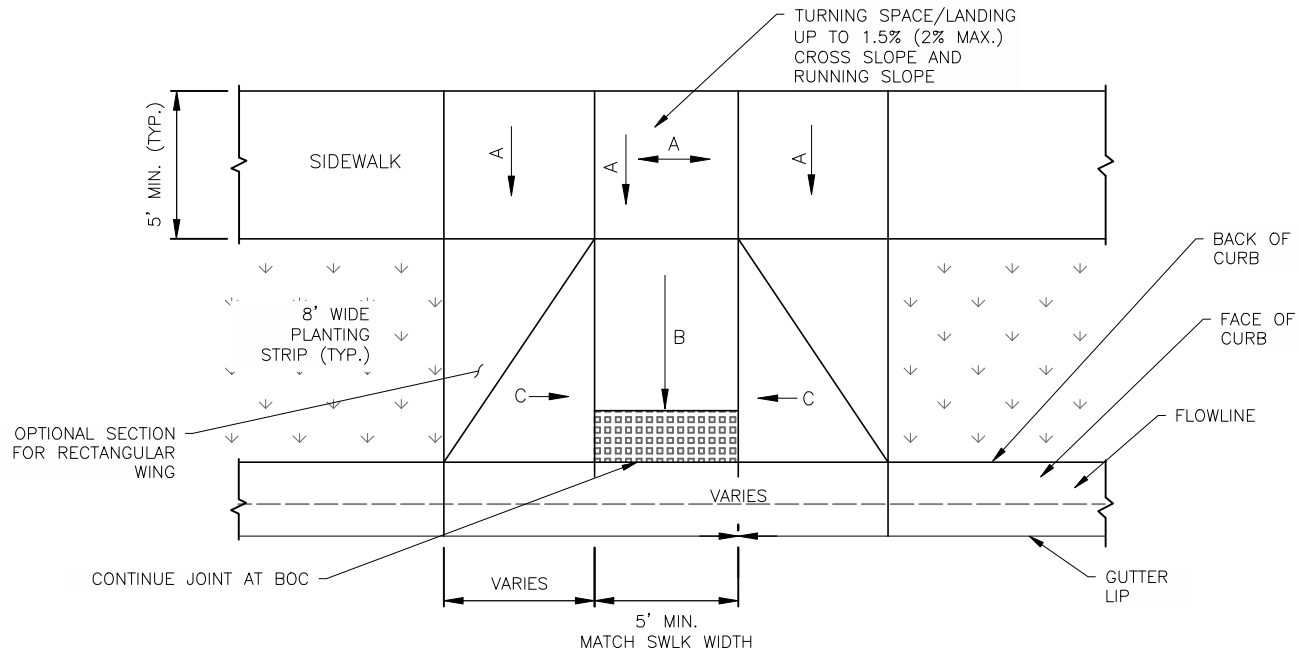

PLAN VIEW

SLOPE "A" = UP TO 1.5% (2.00% MAX)
SLOPE "B" = UP TO 7.5% (8.33% MAX)
SLOPE "C" = UP TO 10% MAX

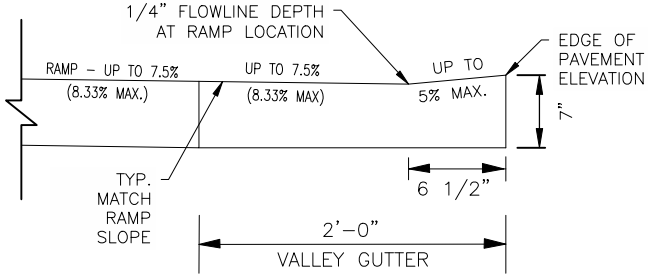

2'–0" CURB AND GUTTER DETAIL

MAXIMUM SLOPES FOR CURB AND GUTTER DEPRESSION AT DIRECTIONAL RAMPS

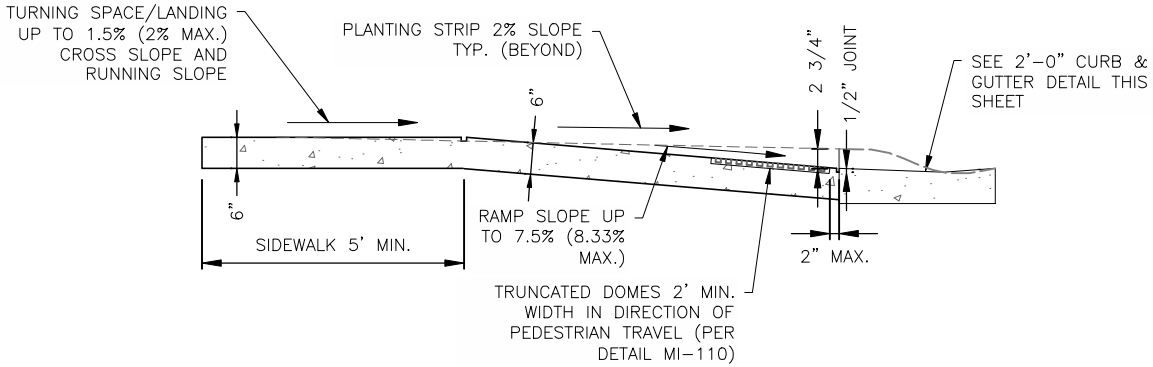

TYPICAL RAMP SECTION AT CENTERLINE

NOT TO SCALE

Concord NORTH CAROLINA High Performance Living

PERPENDICULAR CURB RAMP
2'–0" CURB & GUTTER

3–2022

MI–112

SHEET 1 OF 1

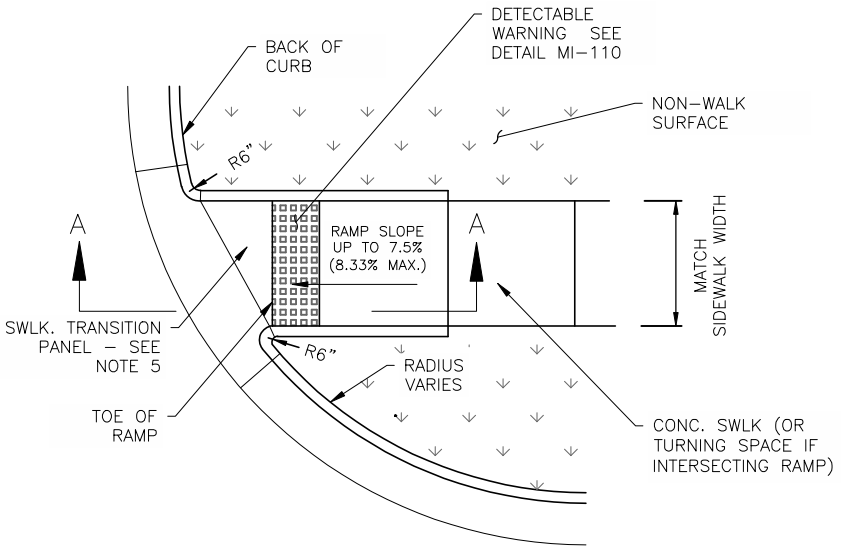

PLAN

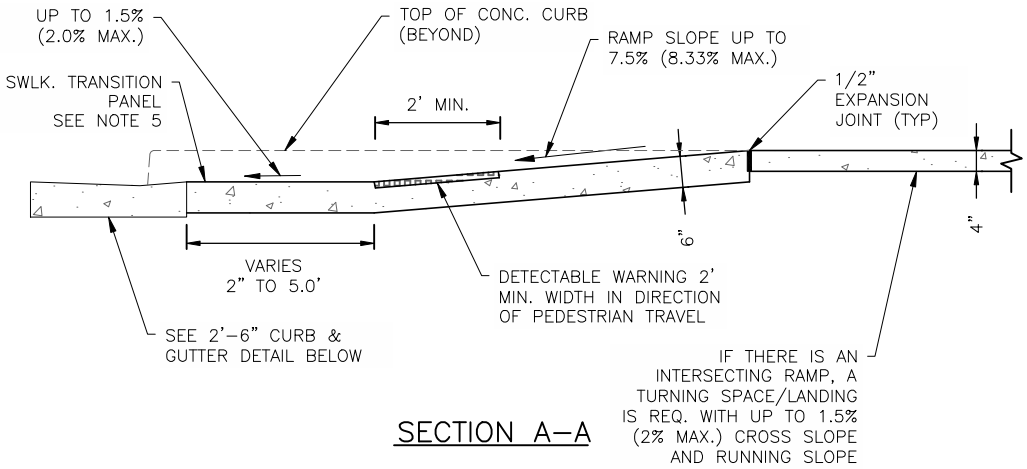

SECTION A–A

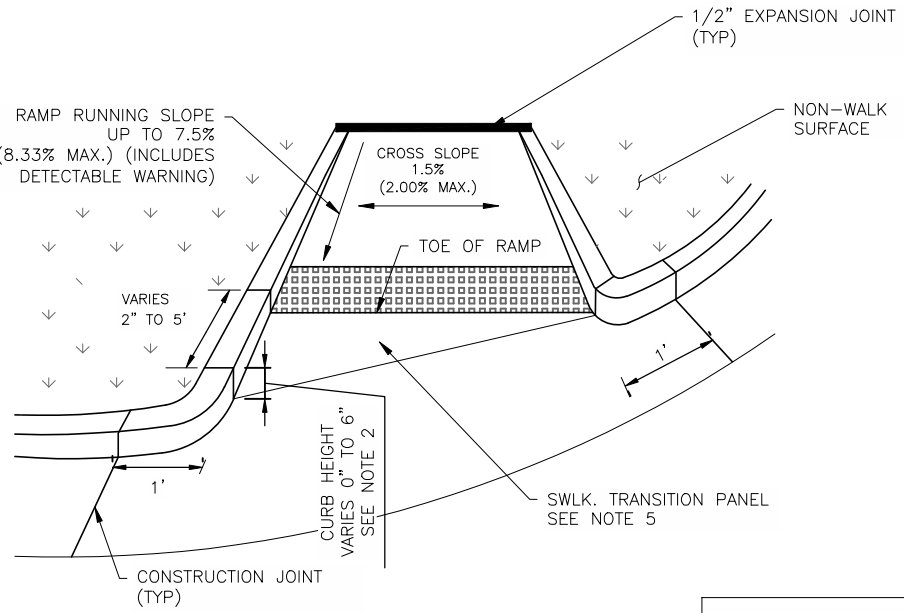

PERSPECTIVE

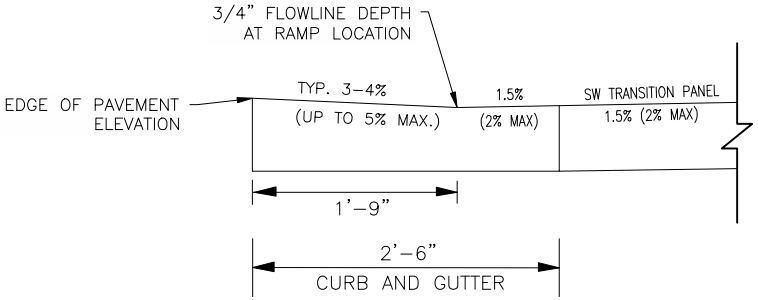

2'–6" CURB AND GUTTER DETAIL

MAXIMUM SLOPES FOR CURB AND GUTTER DEPRESSION AT DIRECTIONAL RAMPS

NOTES:

1. USE THIS DETAIL ONLY UNDER THE FOLLOWING CIRCUMSTANCES:
   - 5-FOOT SIDEWALKS WITH CURB RADII OF 35 FEET OR LESS
   - 6-FOOT SIDEWALKS WITH CURB RADII OF 30 FEET OR LESS
   - 8-FOOT SIDEWALKS WITH CURB RADII OF 25 FEET OR LESS
2. DIRECTIONAL RAMPS WITH RETURNED CURBS AS SHOWN MAY BE USED WHEN A PLANTING STRIP (NON-WALK SURFACE) IS PROVIDED. DO NOT USE THIS DETAIL IF THERE IS HARDSCAPE (WALKABLE SURFACE) INSTEAD OF A PLANTING STRIP. IF A WALKABLE SURFACE IS ADJACENT TO RAMP CONSTRUCT CONCRETE FLARES WITH SLOPES UP TO 10% MAX, INSTEAD OF RETURNED CURBS.
3. ALL CONCRETE SHALL BE AT LEAST 3600 PSI.
4. ENSURE FLUSH CONDITIONS AT RAMP TO GUTTER TRANSITION.
5. SIDEWALK TRANSITION PANEL: PREFERRED DESIGN IS 1.5% (2.0% MAX) IN ALL DIRECTIONS IN FRONT OF GRADE BREAK & DRAIN TO FLOW LINE. RUNNING SLOPE OF THIS AREA MUST NOT EXCEED 2%. CROSS-SLOPE MAY MATCH STREET GRADE AT BACK OF CURB WHEN STREET GRADE >2%. TRANSITION TO 1.5% (2.0% MAX) CROSS-SLOPE AT TOE OF RAMP.

THIS DETAIL IS NOT FOR USE ON NCDOT-MAINTAINED STREETS.

NOT TO SCALE

Concord NORTH CAROLINA High Performance Living

DIRECTIONAL CURP RAMP SMALL/MEDIUM CURB RADII

3-2022

MI-113

SHEET 1 OF 1

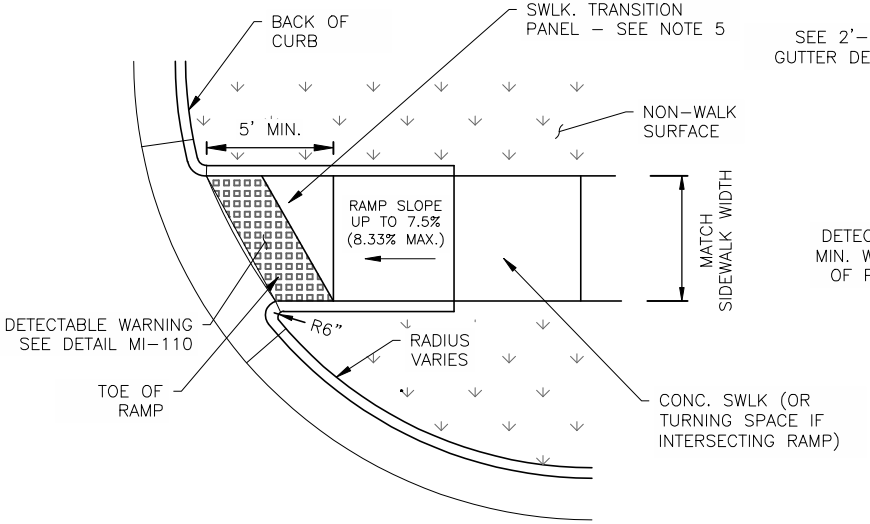

PLAN

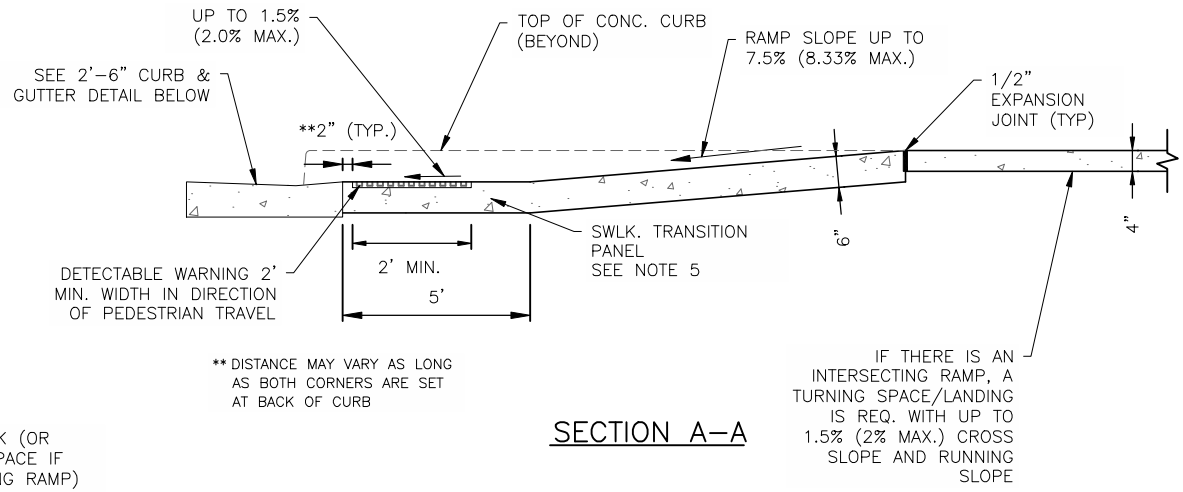

SECTION A–A

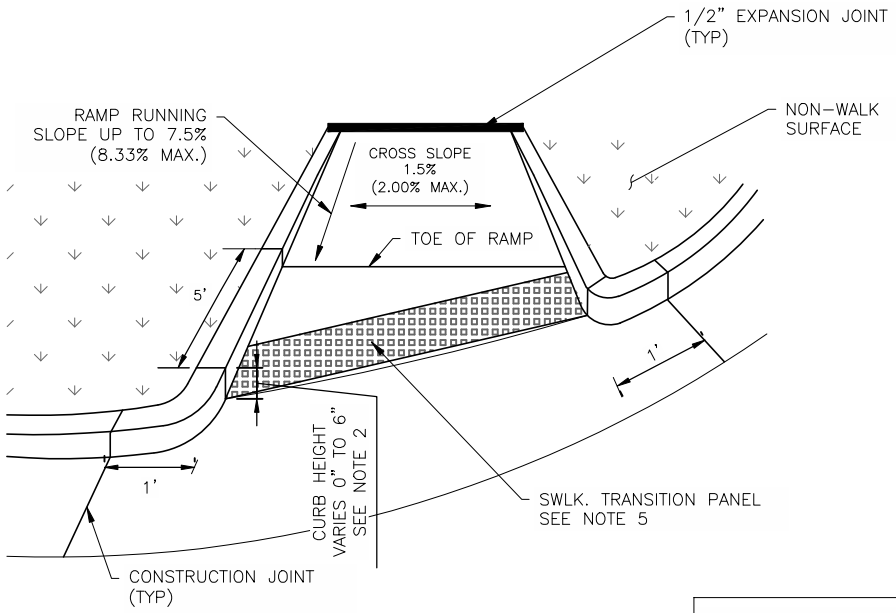

PERSPECTIVE

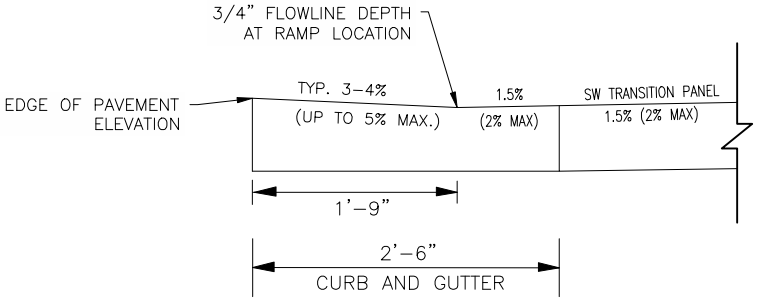

2'–6" CURB AND GUTTER DETAIL

MAXIMUM SLOPES FOR CURB AND GUTTER DEPRESSION AT DIRECTIONAL RAMPS

NOTES:

1. USE THIS DETAIL ONLY UNDER THE FOLLOWING CIRCUMSTANCES:
   - 5–FOOT SIDEWALKS WITH CURB RADII OF GREATER THAN 35 FEET
   - 6–FOOT SIDEWALKS WITH CURB RADII OF GREATER THAN 30 FEET
   - 8–FOOT SIDEWALKS WITH CURB RADII OF GREATER THAN 25 FEET
2. DIRECTIONAL RAMPS WITH RETURNED CURBS AS SHOWN MAY BE USED WHEN A PLANTING STRIP (NON–WALK SURFACE) IS PROVIDED. DO NOT USE THIS DETAIL IF THERE IS HARDSCAPE (WALKABLE SURFACE) INSTEAD OF A PLANTING STRIP. IF A WALKABLE SURFACE IS ADJACENT TO RAMP CONSTRUCT CONCRETE FLARES WITH SLOPES UP TO 10% MAX, INSTEAD OF RETURNED CURBS.
3. ALL CONCRETE SHALL BE AT LEAST 3600 PSI.
4. ENSURE FLUSH CONDITIONS AT RAMP TO GUTTER TRANSITION.
5. SIDEWALK TRANSITION PANEL: PREFERRED DESIGN IS 1.5% (2.0% MAX) IN ALL DIRECTIONS IN FRONT OF GRADE BREAK & DRAIN TO FLOW LINE. RUNNING SLOPE OF THIS AREA MUST NOT EXCEED 2%. CROSS–SLOPE MAY MATCH STREET GRADE AT BACK OF CURB WHEN STREET GRADE >2%. TRANSITION TO 1.5% (2.0% MAX) CROSS–SLOPE AT TOE OF RAMP.

THIS DETAIL IS NOT FOR USE ON NCDOT–MAINTAINED STREETS.

NOT TO SCALE

Concord NORTH CAROLINA High Performance Living

DIRECTIONAL CURB RAMP LARGE CURB RADIUS

3–2022

MI–114

SHEET 1 OF 1

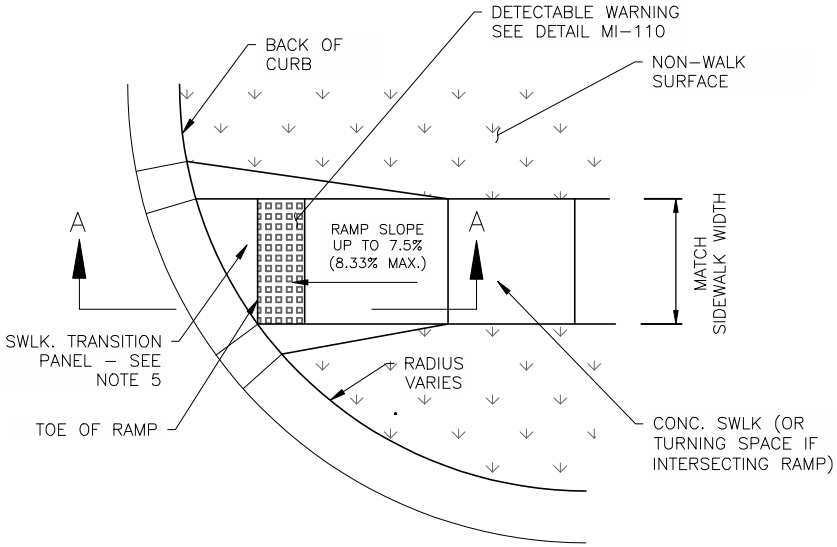

PLAN

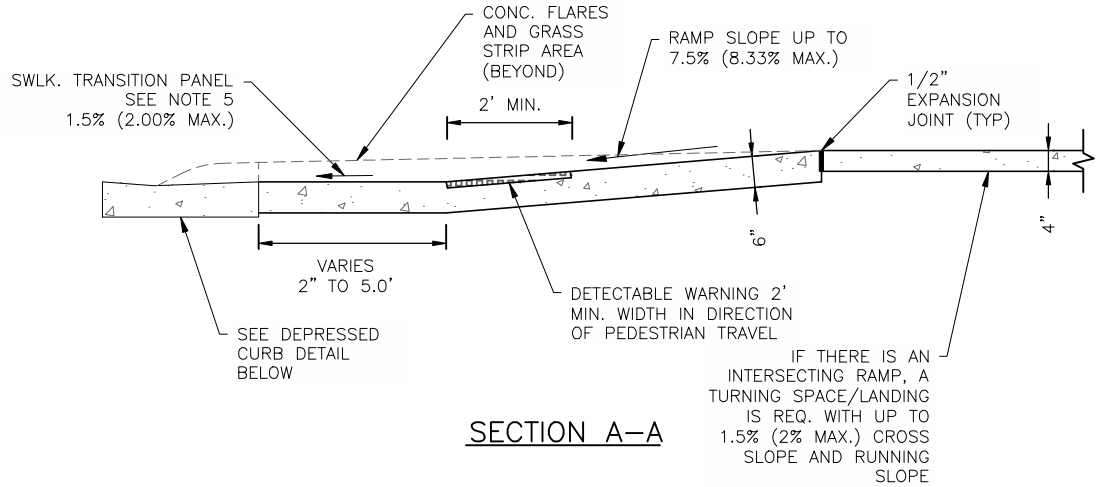

SECTION A–A

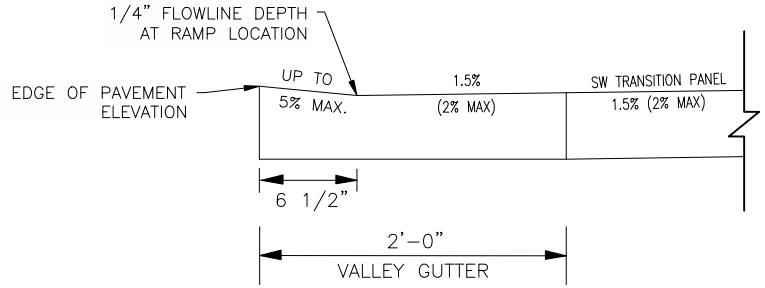

2'–0" CURB AND GUTTER DETAIL

MAXIMUM SLOPES FOR CURB AND GUTTER DEPRESSION AT DIRECTIONAL RAMPS

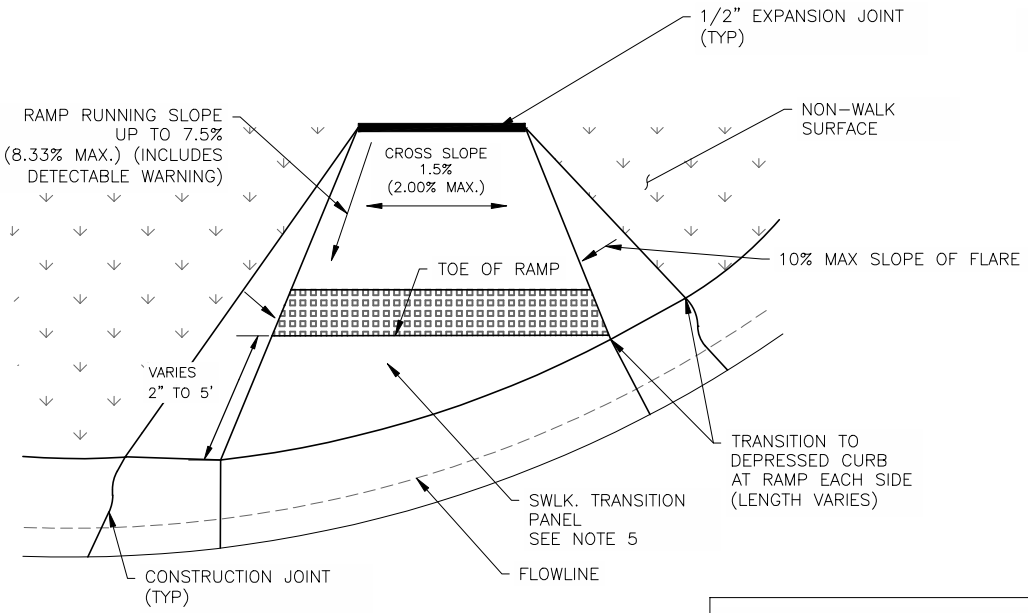

PERSPECTIVE

NOTES:

1. USE THIS DETAIL ONLY UNDER THE FOLLOWING CIRCUMSTANCES:
   - 5-FOOT SIDEWALKS WITH CURB RADII OF 35 FEET OR LESS
   - 6-FOOT SIDEWALKS WITH CURB RADII OF 30 FEET OR LESS
   - 8-FOOT SIDEWALKS WITH CURB RADII OF 25 FEET OR LESS
2. DIRECTIONAL RAMPS WITH RETURNED CURBS AS SHOWN MAY BE USED WHEN A PLANTING STRIP (NON-WALK SURFACE) IS PROVIDED. DO NOT USE THIS DETAIL IF THERE IS HARDSCAPE (WALKABLE SURFACE) INSTEAD OF A PLANTING STRIP. IF A WALKABLE SURFACE IS ADJACENT TO RAMP CONSTRUCT CONCRETE FLARES WITH SLOPES UP TO 10% MAX, INSTEAD OF RETURNED CURBS.
3. ALL CONCRETE SHALL BE AT LEAST 3600 PSI.
4. ENSURE FLUSH CONDITIONS AT RAMP TO GUTTER TRANSITION.
5. SIDEWALK TRANSITION PANEL: PREFERRED DESIGN IS 1.5% (2.0% MAX) IN ALL DIRECTIONS IN FRONT OF GRADE BREAK & DRAIN TO FLOW LINE. RUNNING SLOPE OF THIS AREA MUST NOT EXCEED 2%. CROSS-SLOPE MAY MATCH STREET GRADE AT BACK OF CURB WHEN STREET GRADE >2%. TRANSITION TO 1.5% (2.0% MAX) CROSS-SLOPE AT TOE OF RAMP.

THIS DETAIL IS NOT FOR USE ON NCDOT-MAINTAINED STREETS.

NOT TO SCALE

Concord NORTH CAROLINA High Performance Living

DIRECTIONAL CURB RAMP VALLEY CURB

3-2022

MI-115

SHEET 1 OF 1

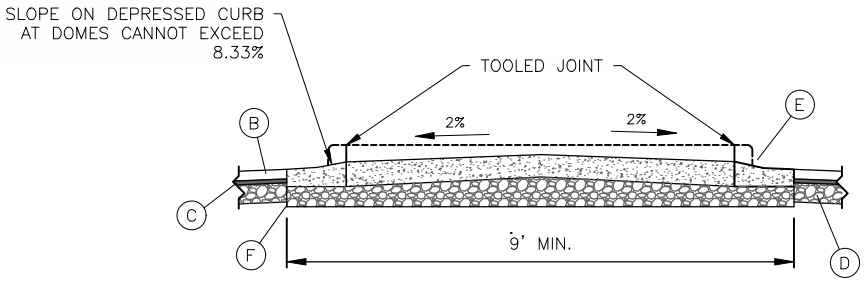

SECTION A–A

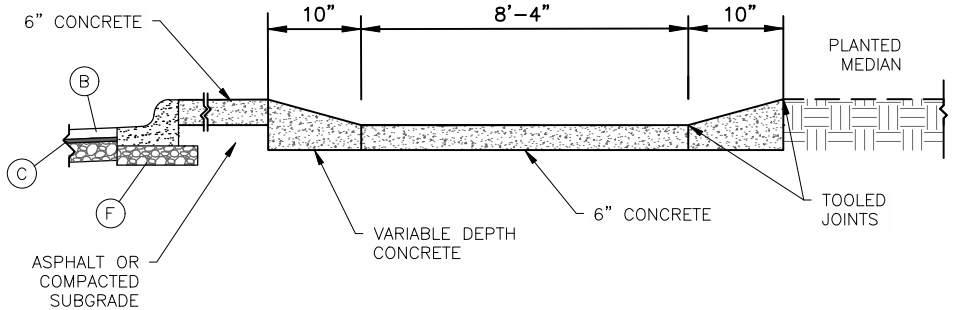

SECTION B–B

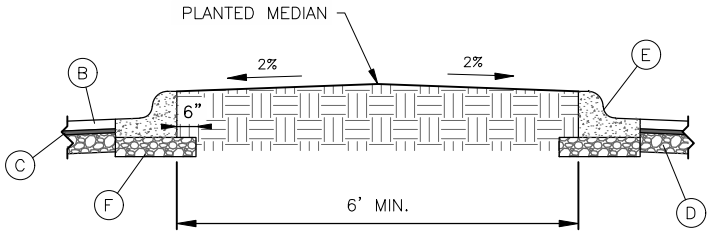

SECTION C–C

NOTES:

1. THIS DETAIL MAY BE USED ON NCDOT–MAINTAINED STREETS ONLY WITH APPROVAL FROM NCDOT.
2. ENSURE PEDESTRIAN PASS–THRU HAS ADEQUATE SLOPE DRAINAGE AND DOES NOT POND WATER.
3. THIS DETAIL MAY BE USED TO PROVIDE A PEDESTRIAN REFUGE PASS–THRU IN AN EXISTING MEDIAN WITH 1'–6" CURB & GUTTER.
4. FOR 1'–6" CURB AND GUTTER, USE CONCORD STANDARD MI–101 FOR CITY STREETS OR NCDOT 846.01 FOR NCDOT STREETS.
5. NCDOT REQUIRES 1' OFFSET FROM EDGE OF PAVEMENT ALONG CURBLINE TO LANE LINE.
6. ALL JOINTS IN THE ISLAND MUST BE SEALED PER APPROPRIATE STANDARD.
7. USE "QWICK KURB L104 REFLECTIVE YELLOW PADDLE" OR EQUIVALENT.
8. CONCORD STANDARD MISC–201 TO BE FOLLOWED IF MEDIAN IS BEING INSTALLED IN EXISTING PAVEMENT.

KEY

- (B) SURFACE COURSE PER APPROPRIATE TYPICAL CROSS SECTION STANDARD
- (C) INTERMEDIATE COURSE PER APPROPRIATE TYPICAL CROSS SECTION STANDARD
- (D) BASE COURSE PER APPROPRIATE TYPICAL CROSS SECTION STANDARD
- (E) 1'–6" STANDARD CURB AND GUTTER
- (F) 6" COMPACTED AGGREGATE BASE COURSE OR 4" B–25.0C BASE COURSE

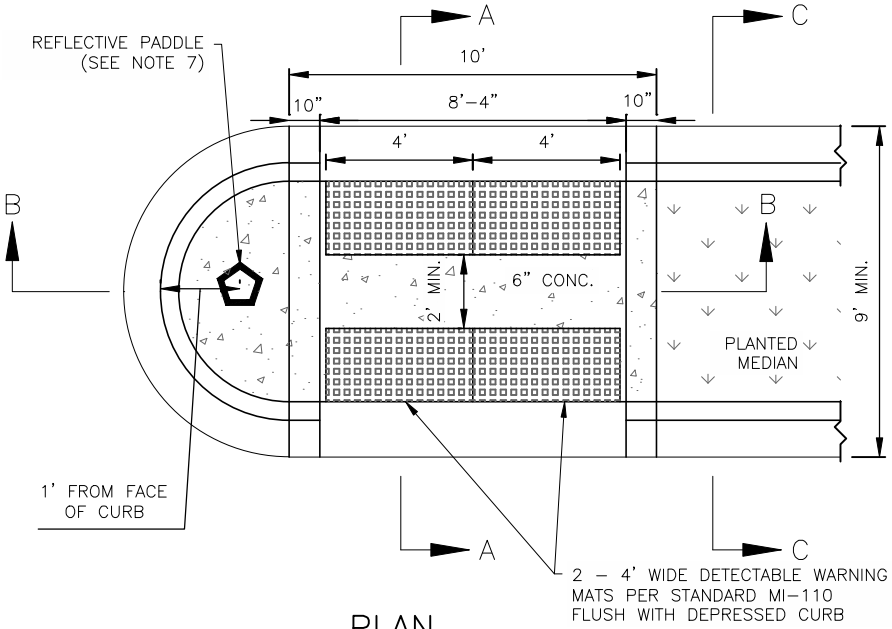

PLAN

NOT TO SCALE

Concord NORTH CAROLINA High Performance Living

PEDESTRIAN REFUGE (1'–6" CURB & GUTTER)

3–2022

MI–116

SHEET 1 OF 1

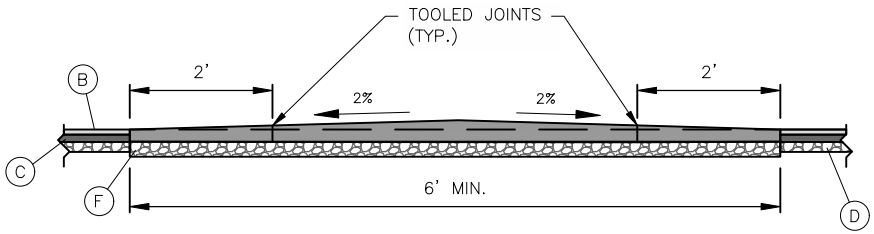

SECTION A–A

NOTES:

1. THIS DETAIL MAY BE USED ON NCDOT–MAINTAINED STREETS ONLY WITH APPROVAL FROM NCDOT.
2. ENSURE PEDESTRIAN PASS–THRU HAS ADEQUATE SLOPE DRAINAGE AND DOES NOT POND WATER.
3. NCDOT REQUIRES 1' OFFSET FROM EDGE OF PAVEMENT ALONG CURBLINE TO LANE LINE.
4. ALL JOINTS IN THE ISLAND MUST BE SEALED PER APPROPRIATE STANDARD.
5. USE "QWICK KURB L104 REFLECTIVE YELLOW PADDLE" OR EQUIVALENT.
6. CONCORD STANDARD MISC–201 TO BE FOLLOWED IF MEDIAN IS BEING INSTALLED IN EXISTING PAVEMENT.

KEY

- (B) SURFACE COURSE PER APPROPRIATE TYPICAL CROSS SECTION STANDARD
- (C) INTERMEDIATE COURSE PER APPROPRIATE TYPICAL CROSS SECTION STANDARD
- (D) BASE COURSE PER APPROPRIATE TYPICAL CROSS SECTION STANDARD
- (E) 1'–6" STANDARD CURB AND GUTTER
- (F) 6" COMPACTED AGGREGATE BASE COURSE OR 4" B–25.0C BASE COURSE

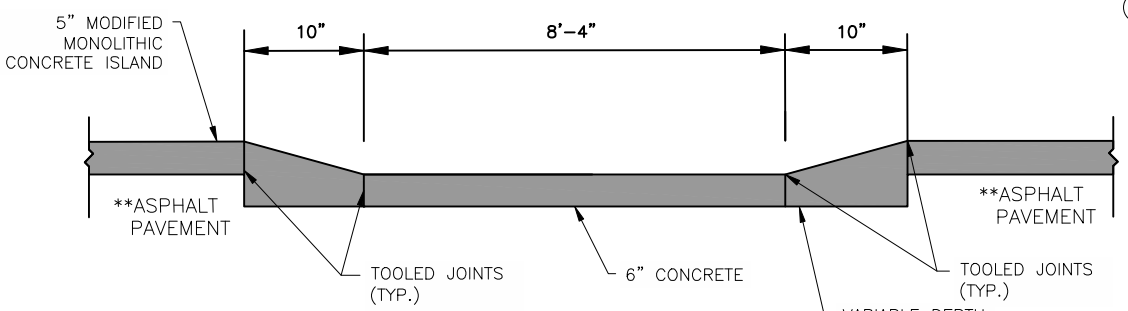

SECTION B–B

** ASPHALT PAVEMENT PER APPROPRIATE TYPICAL CROSS SECTION STANDARD

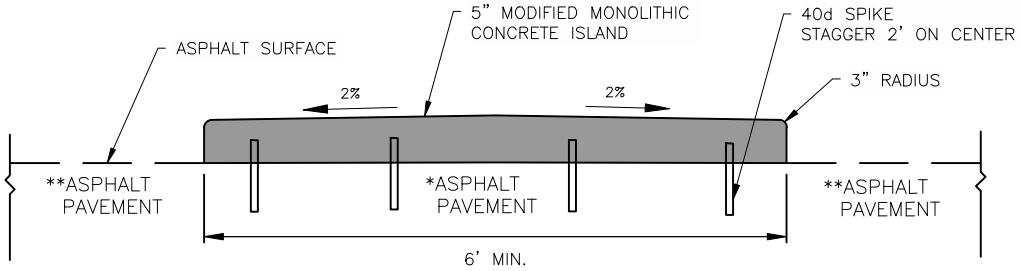

SECTION C–C

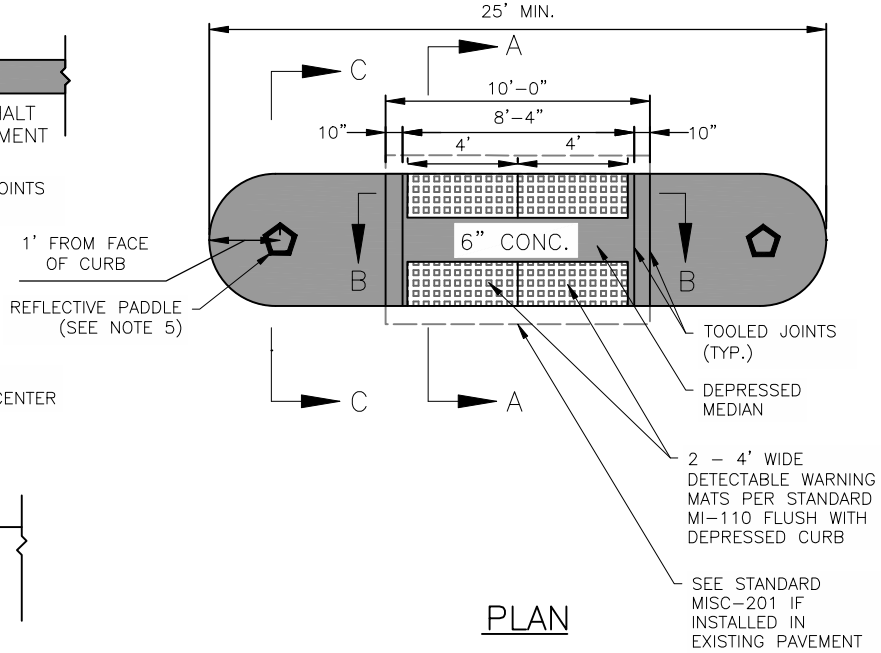

PLAN

NOT TO SCALE

Concord NORTH CAROLINA High Performance Living

PEDESTRIAN REFUGE (MONOLITHIC CONCRETE)

3–2022

MI–117

SHEET 1 OF 1

NOTES:

1. **NEW PAVEMENT SHALL HAVE SECTION THICKNESS DESIGNED TO NCDOT SUPERPAVE STANDARDS AS PROVIDED BY ENGINEER OR MATCH EXISTING CONSTRUCTION, WHICH EVER IS GREATER.**

KEY

(A) 4" SIDEWALK

*DRIVEWAY APRON AND SIDEWALK AT DRIVEWAY CROSSINGS SHOULD BE 6" THICK

(B) EXISTING PAVEMENT

(C) MIN. 1 ½" S 9.5B SURFACE COURSE*

(E) 2'–6" STANDARD CURB AND GUTTER SHOWN, APPROPRIATE CURB & GUTTER TO BE DETERMINED BASED ON STREET CLASSIFICATION

(F) 6" COMPACTED AGGREGATE BASE COURSE OR 4" B–25.0C BASE COURSE

(G) MIN. 8" I–19.0C**

(K) PLANTING STRIP ADJACENT TO SIDEWALK SHALL BE GRADED TO 1/4" PER FOOT (MIN.) TO 1–1/4" PER FOOT (MAX.). PRIOR APPROVAL REQUIRED FOR STEEPER GRADES

(L) MILLING LIMITS SHOULD BE TO EITHER THE CENTERLINE OF 2 LANE UNDIVIDED STREETS, TO THE OPPOSITE EDGE OF PAVEMENT ON 2 LANE DIVIDED STREETS, OR TO THE FULL WIDTH OF THE FIRST LANE FOR MULTI–LANE STREETS.

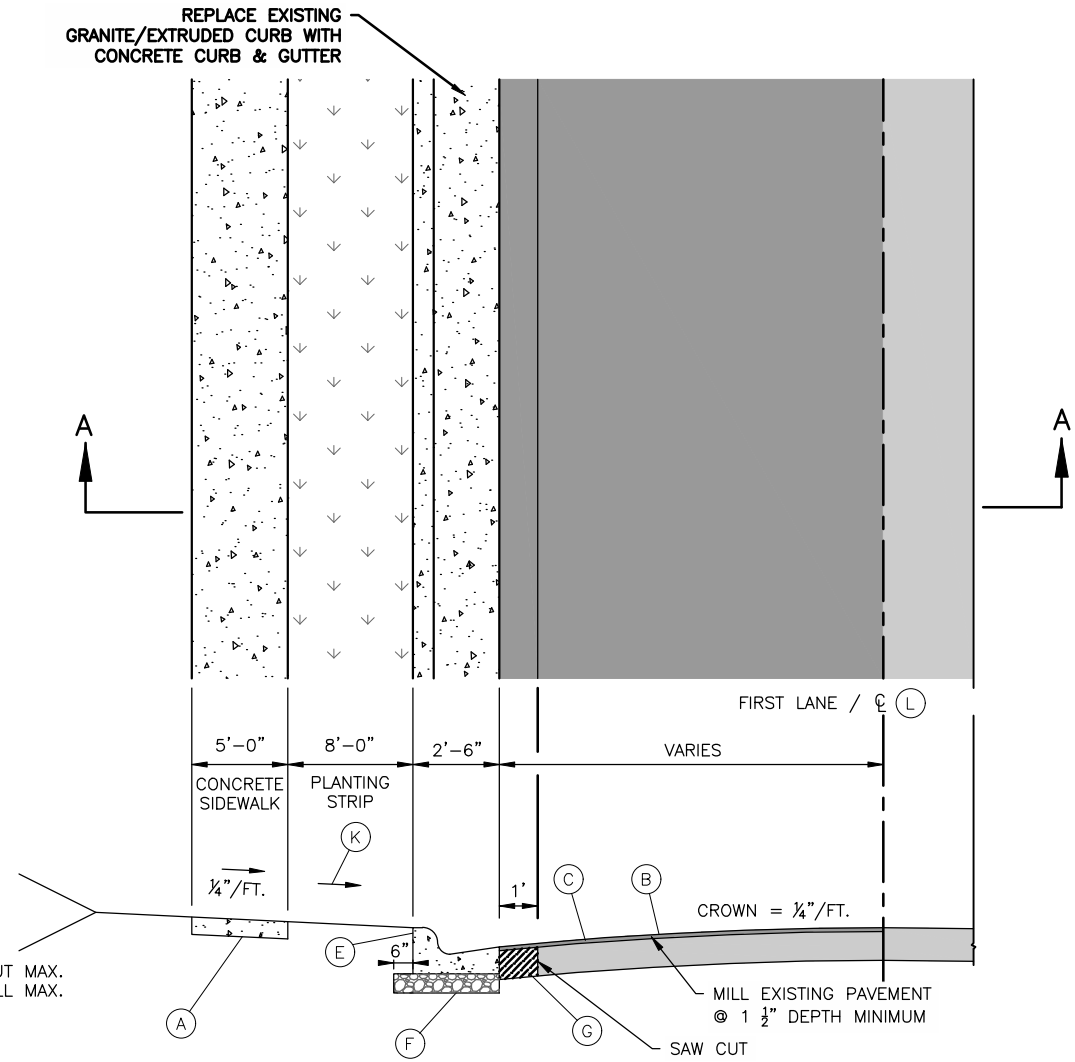

SECTION A – A

NOT TO SCALE

Concord NORTH CAROLINA High Performance Living

CURB & GUTTER REMOVAL / REPLACEMENT

3–2022

MISC–201

SHEET 1 OF 1

NOTES:

1. NEW PAVEMENT SHALL HAVE SECTION THICKNESS DESIGNED TO NCDOT SUPERPAVE STANDARDS AS PROVIDED BY ENGINEER OR MATCH EXISTING CONSTRUCTION, WHICH EVER IS GREATER.
2. TRENCH IS TO BE BACKFILLED IN COMPACTED 6" LAYERS BEFORE PAVEMENT REPAIRS ARE MADE.
3. REFER TO EARTHWORK SPECIFICATIONS FOR EMBEDMENT AND FILL REQUIREMENTS.
4. THIS DETAIL SHOWS ASPHALT PAVEMENT REPLACEMENT. THE WIDTH OF PAY LIMITS SHALL APPLY TO STONE AND CONCRETE PAVEMENT AS WELL.

KEY

(B) SURFACE COURSE MATCH EXISTING | S9.5B (MIN. 2 1/2")

(C) INTERMEDIATE COURSE MATCH EXISTING | I-19.0C (MIN. 2 1/4")

(D) BASE COURSE MATCH EXISTING/PROPOSED | B25.0C COMPACTED SUBGRADE (MIN. 8")

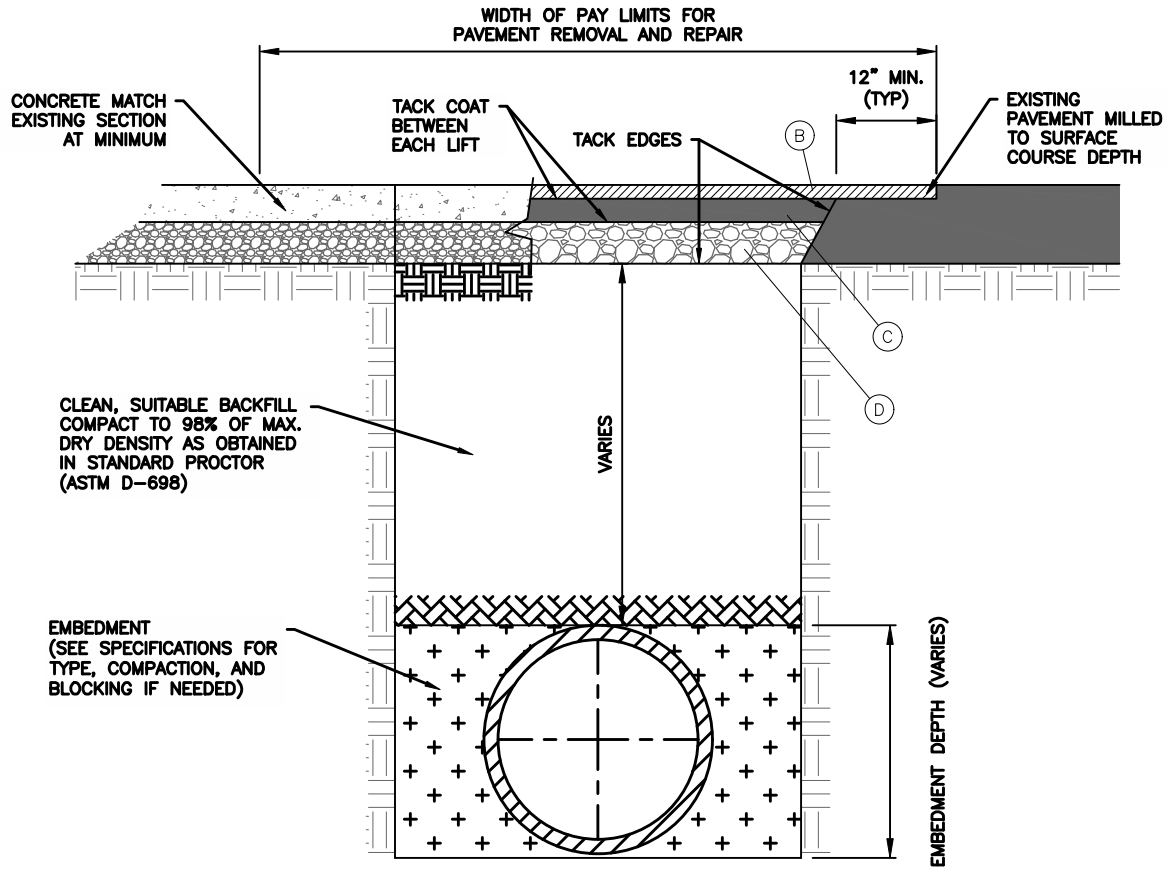

NOT TO SCALE

Concord NORTH CAROLINA High Performance Living

UTILITY CUT REPLACEMENT DETAIL

3-2022

MISC-202

SHEET 1 OF 1

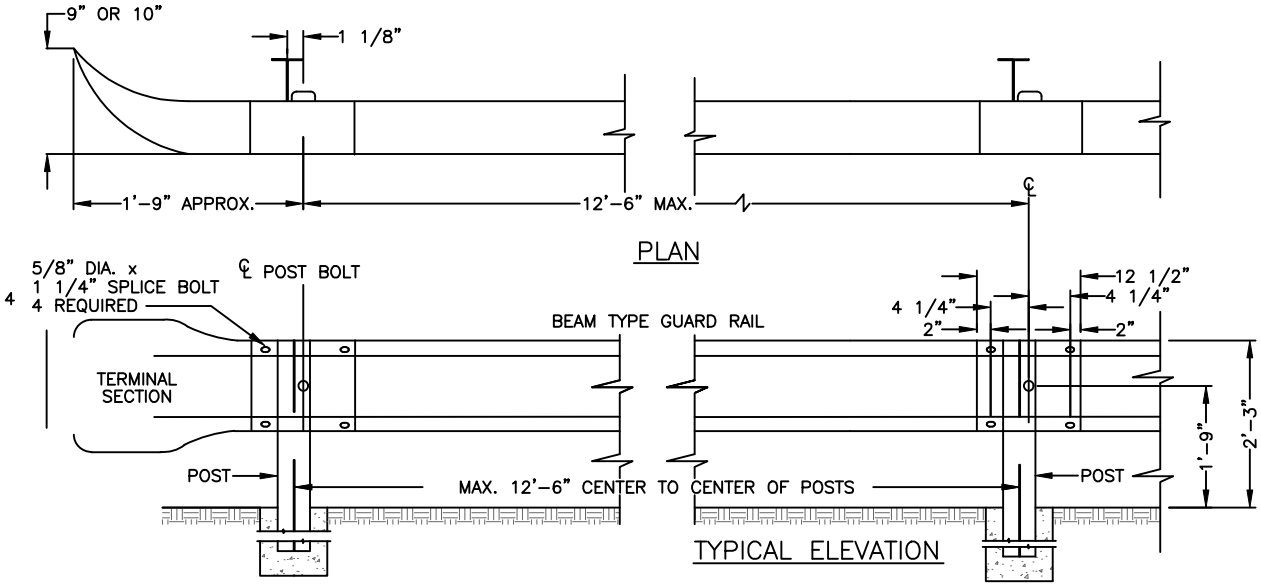

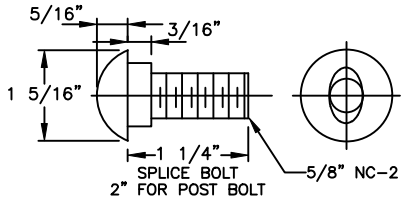

DETAIL OF BOLT

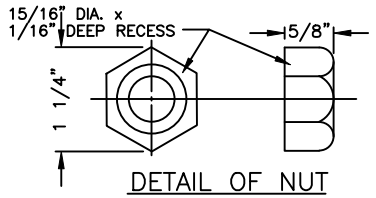

DETAIL OF NUT

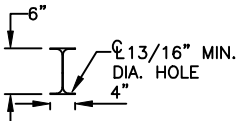

W 6 x 8.5

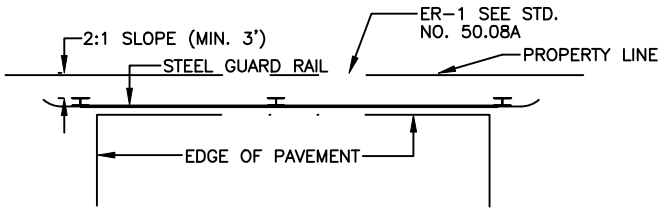

DEAD-END STREET BARRICADE

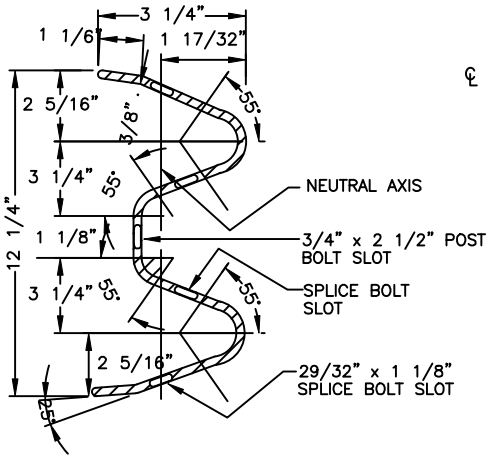

SECTION THRU RAIL ELEMENT

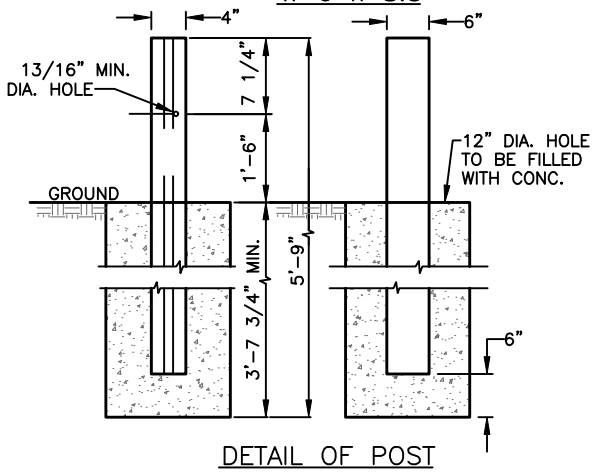

DETAIL OF POST

NOTE

THIS DETAIL IS NOT A GUARDRAIL DETAIL. FOR ROADSIDE GUARDRAIL, SEE NCDOT STANDARD DRAWINGS 862.01-862.04.

NOT TO SCALE

Concord NORTH CAROLINA High Performance Living

END OF ROAD BARRICADE

3-2022

MISC-203

SHEET 1 OF 2

GENERAL NOTES:

1. STEEL BEAM TYPE GUARD RAILS SHALL BE INSTALLED AT THE END OF ALL DEAD–END STREETS, EXCEPT CUL–DE–SAC STREETS WHICH HAVE BEEN IMPROVED WITH A PERMANENT TURN–AROUND.

2. FOR STREETS 26' IN WIDTH THE GUARD RAIL SHALL CONSIST OF TWO(2) 12'–6" SECTIONS OR ONE(1) 25' SECTION, THREE (3) STEEL POSTS, AND TWO (2) TERMINAL SECTIONS. FOR STREETS GREATER THAN 25' IN WIDTH THE GUARD RAIL SHALL SPAN THE ENTIRE WIDTH OF THE STREET.

3. GUARD RAIL SHALL CONSIST OF RAIL ELEMENTS FABRICATED TO DEVELOP CONTINUOUS BEAM STRENGTH AND INSTALLED AS SHOWN.

4. MINIMUM THICKNESS OF GUARD RAIL SHALL BE 12 GAGE U.S. STANDARD. THE RAIL ELEMENT INCLUDING SPLICES, SHALL HAVE A MINIMUM ULTIMATE TENSILE STRENGTH OF 80,000 LBS. GUARD RAIL PARTS FURNISHED SHALL BE INTERCHANGEABLE WITH SIMILAR PARTS REGARDLESS OF THE SOURCE OF MANUFACTURER. THE HOLES FOR CONNECTING BOLTS SHALL BE PUNCHED OF DRILLED, BURNING WILL NOT BE PERMITTED.

5. THE GUARD, BOLTS, NUTS, STEEL POSTS. AND ALL OTHER METAL PARTS SHALL BE GALVANIZED TO CONFORM TO THE REQUIREMENTS FOR THE COATING CLASS, (2.50 OUNCES PER SQUARE FOOT) OF THE CURRENT SPECIFICATIONS FOR ZINC–COATED (GALVANIZED) IRON, AND STEEL SHEETS, COILS, AND CUT LENGTHS, IN ACCORDANCE WITH ASTM 123A.

6. IF THE AVERAGE SPELTER COATING AS DETERMINED FROM THE REQUIRED SAMPLES IS LESS THAN TWO (2) OUNCES OF SPELTER PER SQUARE FOOT, OR IF ANY ONE SPECIMEN HAS LESS THAN 1.8 ONCES OF SPELTER PER SQUARE FOOT OF DOUBLE EXPOSED SURFACE, THE LOT SAMPLED SHALL BE REJECTED, THE FINISHED SHEETS SHALL BE OF FIRST CLASS COMMERCIAL QUALITY, FREE FROM INJURIOUS DEFECTS, SUCH AS BLISTERS, FLUX, AND UNCOATED SPOTS.

7. THE GUARD RAIL SHALL BE INSPECTED TO DETERMINE THAT THE MATERIAL, DIMENSIONS, AND WORKMANSHIP ARE IN ACCORDANCE WITH THIS PLAN.

8. WHERE A DEAD–END STREET REQUIRES A BARRICADE, END OF ROADWAY MARKER SIGNS SHALL ALSO BE REQUIRED. (SEE STD. MISC–204).

NOT TO SCALE

Concord NORTH CAROLINA High Performance Living

END OF ROAD BARRICADE

3–2022

MISC–203

NOTES:

1. WHEN A DEAD-END OR STUBBED STREET REQUIRES A BARRICADE, END-OF-ROADWAY MARKER SIGNS (OM4-3, 24"x24", SOLID RED) SHALL BE PROVIDED.

2. SIGNS ARE TO BE PLACED BEHIND THE BARRICADE (SEE DETAIL MISC-203), EVENLY SPACED WITH ONE SIGN PLACED AT THE CENTERLINE LOCATION AND ADDITIONAL SIGNS AT 6' O.C. (MINIMUM OF 3 SIGNS, MAXIMUM OF 5 SIGNS).

3. WHEN BARRICADE IS USED ON A STREET STUB, THE SIGN AT THE CENTERLINE SHALL BE SUPPLEMENTED WITH A STREET CONNECTIVITY SIGN. SEE DETAIL MISC-205.

4. ALL SIGNS/MARKERS SHALL MEET OR EXCEED MUTCD STANDARDS FOR RETROREFLECTIVITY.

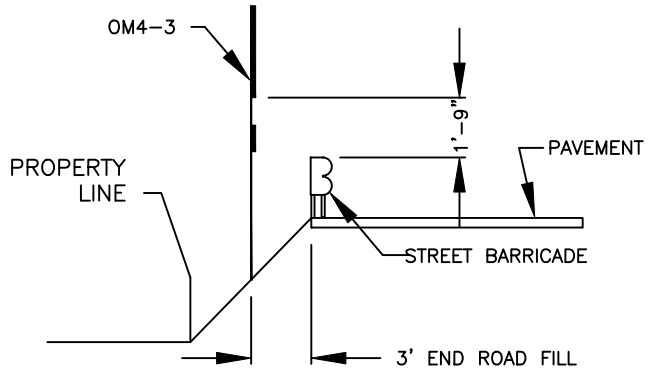

SIGN LOCATION DETAIL

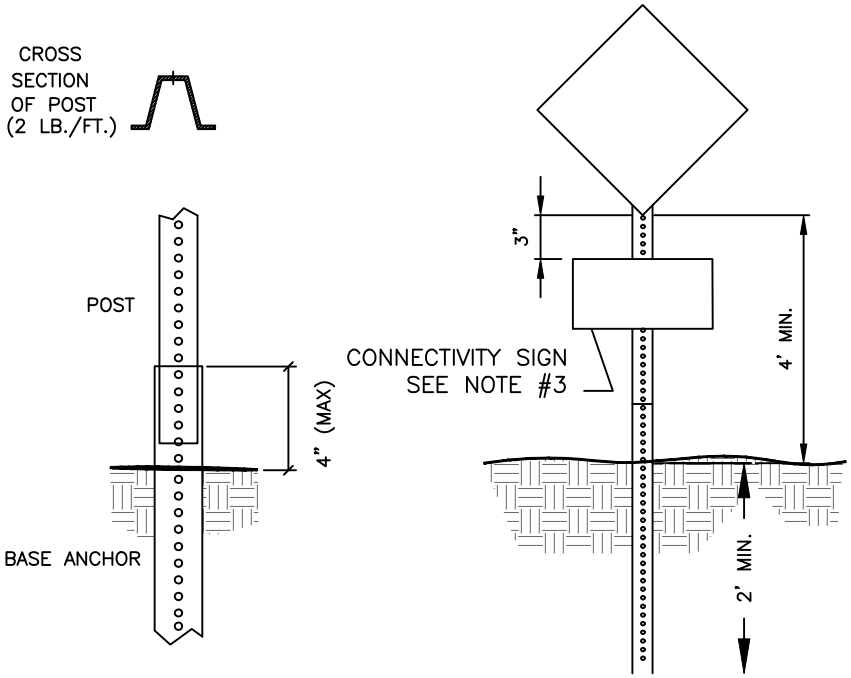

NOT TO SCALE

Concord NORTH CAROLINA High Performance Living

END OF ROAD MARKER

3-2022

MISC-204

SHEET 1 OF 1

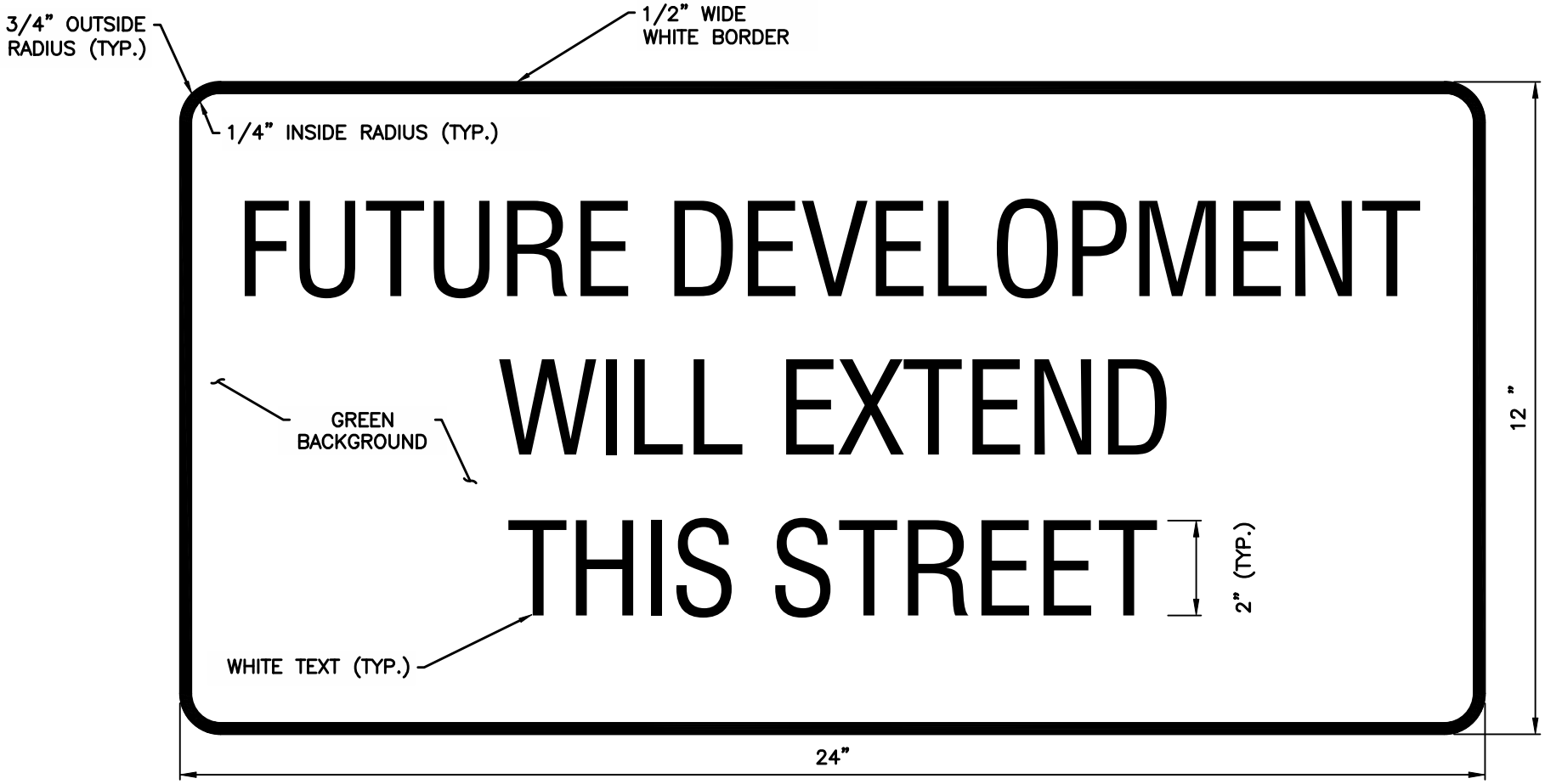

NOTES:

1. SIGN SHALL MEET OR EXCEED MUTCD STANDARDS FOR RETROREFLECTIVITY
2. SIGN MATERIAL SHALL BE 0.080" THICK ALUMINUM
3. ALL LETTERS SHALL BE SERIES B-2000 FROM THE 2004 STANDARD HIGHWAY SIGNS MANUAL (AND ANY REVISION THERETO) PUBLISHED BY THE FEDERAL HIGHWAY ADMINISTRATION.

NOT TO SCALE

Concord NORTH CAROLINA High Performance Living

END OF STREET
FUTURE DEVELOPMENT SIGN

3-2022
MISC-205
SHEET 1 OF 1

WARRANTS

STANDARD SAFETY RAIL (STD. MISC–206 SHEET 2) SHALL BE INSTALLED UNDER ANY OF THE FOLLOWING CIRCUMSTANCES IN BOTH NEW CONSTRUCTION AND IN RETROFITTING OR RECONSTRUCTION OF EXISTING ROADWAYS OR SITES:

1. WHEN THE CULVERT CROSSING DETAIL (STD. STR–119) APPLIES.
2. IF THERE IS A TWO FOOT OR GREATER DROPOFF WITHIN 2 FEET OF THE EDGE OF THE SIDEWALK (SEE DIAGRAM A).
3. IF THERE IS A 1–FOOT OR LARGER DROPOFF DIRECTLY ADJACENT TO THE SIDEWALK EDGE (SEE DIAGRAM B).
4. AT THE TOP OF ANY DROPOFF WITHIN THE PEDESTRIAN CLEAR ZONE OR WHERE PEDESTRIANS CAN REASONABLY BE EXPECTED IN THE VICINITY.
5. AT THE DIRECTION OF CITY TRANSPORTATION OR ENGINEERING STAFF BASED ON FIELD CONDITIONS.

DEFINITIONS

- DROPOFF –– A SLOPE OF 2:1 OR STEEPER. EXAMPLES INCLUDE HEADWALLS, RETAINING WALLS, AND CULVERTS.
- PEDESTRIAN CLEAR ZONE –– 10 FEET OF ANY COMBINATION OF SIDEWALK, SLOPE, AND SHOULDER SLOPED AT 6:1 OR FLATTER. SIDEWALK DOES NOT NEED TO BE PRESENT.
- SIDEWALK –– FOR PURPOSES OF THIS STANDARD, THE TERM "SIDEWALK" IS USED GENERICALLY AND SHALL MEAN ANY PATH OR SURFACE TO BE USED FOR BICYCLE AND/OR PEDESTRIAN TRANSPORTATION. EXAMPLES INCLUDE, BUT ARE NOT LIMITED TO, SIDEWALKS, BIKE PATHS, SHARED–USE PATHS, PEDESTRIAN PATHS, AND GREENWAYS.

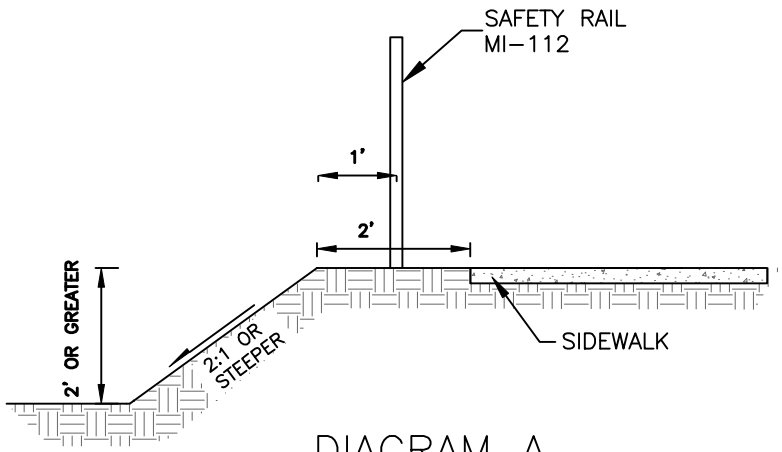

DIAGRAM A

SLOPED DROPOFF AT BACK OF SIDEWALK

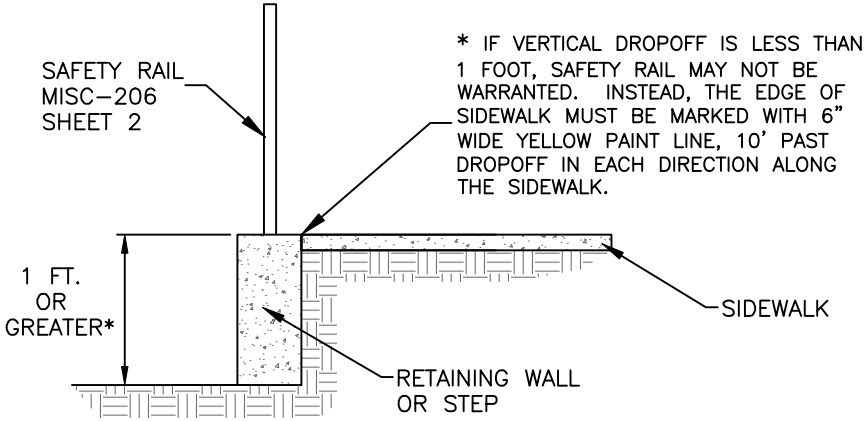

DIAGRAM B

VERTICAL DROPOFF AT BACK OF SIDEWALK

NOT TO SCALE

Concord NORTH CAROLINA High Performance Living

SAFETY RAIL & WARRANTS

3–2022

MISC–206

SHEET 1 OF 2

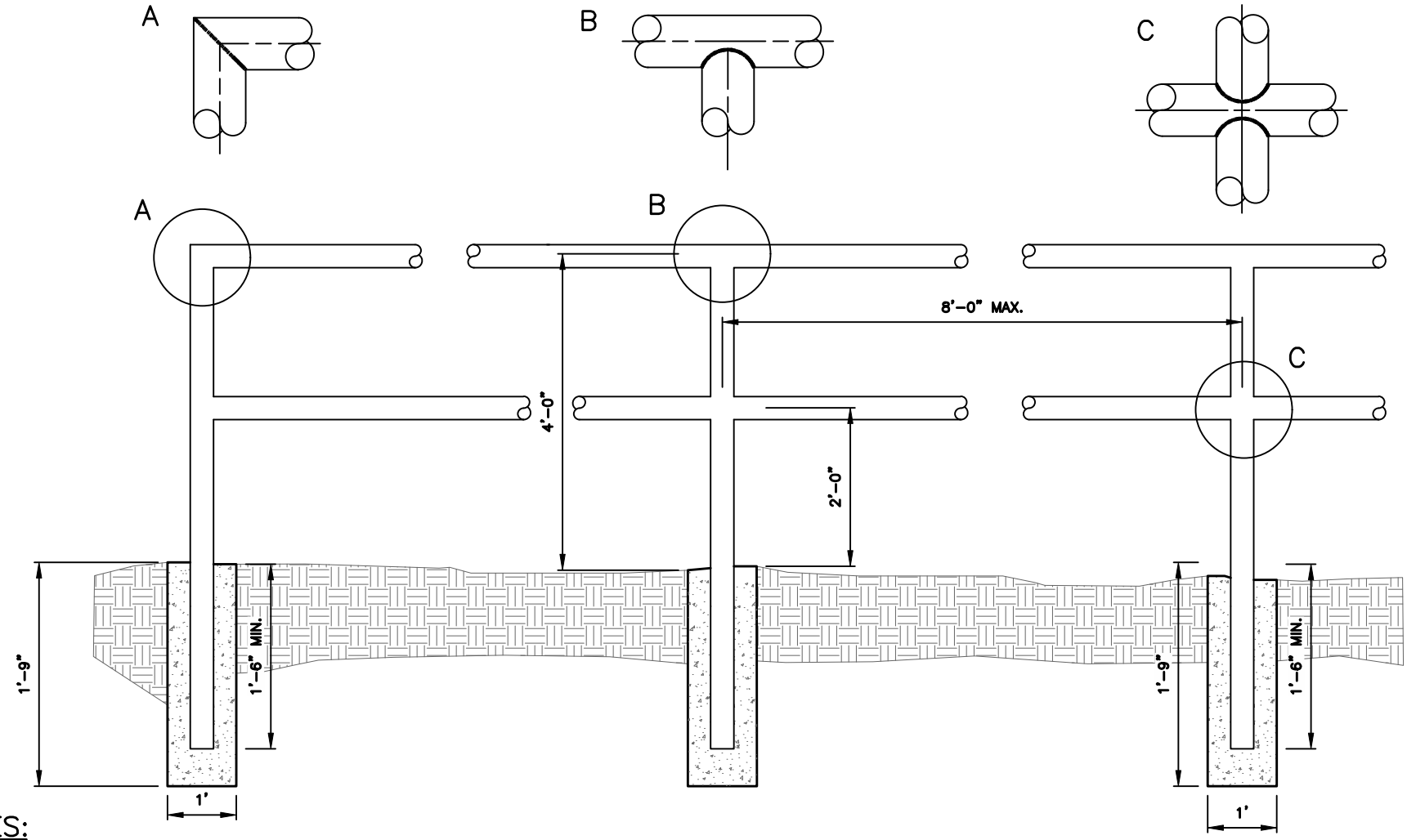

NOTES:

1. ALL CONCRETE TO BE 3600 P.S.I. COMPRESSIVE STRENGTH.
2. TYPE OF PIPE TO BE USED IS 1-5/8" MAX. O.D. BLACK IRON, LOW CARBON PIPE OR GALVANIZED.
3. ALL JOINTS TO HAVE A 1/2" FILLET WELD AT ALL JOINTS.
4. PAINT ASSEMBLY AFTER INSTALLATION WITH BLACK ALL WEATHER ENAMEL.
5. SEE STD. MISC-206 SHEET 1 FOR WARRANTS

NOT TO SCALE

Concord NORTH CAROLINA High Performance Living

SAFETY RAIL & WARRANTS

3-2022

MISC-206

SHEET 2 OF 2